MONACO RV MOTORHOME LIMITED WARRANTY – 2012

WHAT THE PERIOD OF COVERAGE IS:

This Limited Warranty provided by Monaco RV, LLC ("Warrantor") for your Monaco® or Holiday Rambler® motorhome covers those components, assemblies and systems of your new motorhome not excluded under the section "What The Warranty Does Not Cover" and when sold by an authorized dealer, for twelve (12) months from the original retail purchase date or the first 24,000 miles of use, whichever occurs first. However, this Limited Warranty covers the internal steel or aluminum structural support frames inside the walls and roof (excluding slide-outs) for sixty (60) months from the original retail purchase date or the first 50,000 miles of use, whichever occurs first. If you use your motorhome for any rental, commercial or business purposes whatsoever, the Limited Warranty provided by Warrantor covers your new motorhome when sold by an authorized dealer for ninety (90) days from the original retail purchase date or the first 24,000 miles of use, whichever occurs first, and it covers the internal steel or aluminum structural support frames inside the walls and roof (excluding slide-outs) for twelve (12) months from the original retail purchase date or the first 24,000 miles of use, whichever occurs first. A conclusive presumption that your motorhome has been used for commercial and/or business purposes arises if you have filed any tax or other form claiming any business use, ownership, or tax benefit related to your motorhome. The above Limited Warranty coverage periods apply to all owners, including subsequent owners, of the motorhome. However, a subsequent owner must submit a warranty transfer form by filing the form and paying the transfer fee. A subsequent owner's warranty coverage period is the remaining balance of the warranty coverage period the prior owner was entitled to under this Limited Warranty. Warranty transfer forms can be obtained by contacting the Customer Relations Department. There is a one time, $250 processing fee for the transfer.

LIMITATION AND DISCLAIMER OF IMPLIED WARRANTIES:

IMPLIED WARRANTIES, IF ANY, ARISING BY WAY OF STATE LAW, INCLUDING ANY IMPLIED WARRANTY OF MERCHANTABILITY AND ANY IMPLIED WARRANTY OF FITNESS FOR A PARTICULAR PURPOSE, ARE LIMITED IN DURATION TO THE TERM OF THIS LIMITED WARRANTY AND ARE LIMITED IN SCOPE OF COVERAGE TO THOSE PORTIONS OF THE MOTORHOME COVERED BY THIS LIMITED WARRANTY. WARRANTOR DISCLAIMS ALL IMPLIED AND EXPRESS WARRANTIES, INCLUDING THE IMPLIED WARRANTY OF MERCHANTABILITY AND THE IMPLIED WARRANTY OF FITNESS FOR A PARTICULAR PURPOSE, ON COMPONENTS AND APPLIANCES EXCLUDED FROM COVERAGE AS SET FORTH BELOW. There is no warranty of any nature made by Warrantor beyond that contained in this Limited Warranty. No person has authority to enlarge, amend or modify this Limited Warranty. The dealer is not the Warrantor's agent but is an independent entity. Warrantor is not responsible for any undertaking, representation or warranty made by any dealer or other person beyond those expressly set forth in this Limited Warranty. Some states do not allow limitations on how long an implied warranty lasts, so the above limitation may not apply to you.

WHAT THE WARRANTY COVERS:

Warrantor's Limited Warranty covers defects in the manufacture of your motorhome and defects in materials used to manufacture your motorhome. "Defect" means the failure of the motorhome and/or the materials used to assemble the motorhome to conform to Warrantor's design and manufacturing specifications and tolerances. Also see the section "What the Warranty Does Not Cover" set out below.

WHAT WE WILL DO TO CORRECT PROBLEMS:

Warrantor's sole and exclusive obligation is to repair and/or replace, at its option, any covered defect if: (1) you notify Warrantor or one of its authorized servicing dealers of the defect within the warranty coverage period and within five (5) days of discovering the defect; and (2) you deliver your Motorhome to Warrantor or Warrantor's authorized servicing dealer at your cost and expense. It is reasonable to expect some service items to occur during the warranty period. The performance of warranty repairs shall not extend the original warranty coverage period. Further, any performance of repairs after the warranty coverage period has expired or any performance of repairs to component parts and appliances that are excluded from coverage shall be considered "good will" repairs, which shall not alter the express terms of this Limited Warranty. If the repair or replacement remedy fails to successfully cure a defect after Warrantor received a reasonable opportunity to cure the defect(s), your sole and exclusive remedy shall be limited to Warrantor paying you the cost of having an independent third party perform repair(s) to the defect(s). Warrantor may use new and/or remanufactured parts and/or components of substantially equal quality to complete any repair.

Imperfections and/or damage to interior and exterior surfaces, trim, upholstery and other appearance items may occur at the factory during manufacture, during delivery of the motorhome to the selling dealer or on the selling dealer's lot. Normally, any such imperfections are detected and corrected at the factory or by the selling dealer during the inspection process performed by the Warrantor and the selling dealer. If, however, you discover any such imperfection or damage when you take delivery of the motorhome, you must notify your dealer or Warrantor within thirty (30) days of the date of purchase to have repairs performed at no cost to you in accordance with this Limited Warranty. If not reported within this time, such imperfections are conclusively presumed to be the result of normal wear and tear.

If a servicing dealer is unable or unwilling to solve a problem you are convinced is covered by the Limited Warranty, or that concerns the safety of your motorhome, or that may involve local consumer protection or "lemon" laws, then you **must**, to the extent permitted by law, **notify Warrantor directly in writing** of the failure to successfully repair the defect(s) so that Warrantor can become directly involved in performing a successful repair.

HOW TO GET SERVICE:

For warranty service simply contact one of Warrantor's authorized service centers for an appointment, then deliver your motorhome (at your expense) to the service center. If you need assistance in locating an authorized warranty service facility, contact Warrantor's Warranty Department (1-877-466-6226).

HOW TO GET SERVICE (cont'd):

The Warrantor's mailing address is:

91320 Coburg Industrial Way
Coburg, Oregon 97408

The "Acknowledgement of Receipt of Warranty/Production Information" form must be returned to Warrantor promptly upon purchase to assure proper part replacement or repair of your towable product. Failure to return the "Acknowledgement of Receipt of Warranty/Production Information" form will not affect your rights under the Limited Warranty so long as you can furnish proof of purchase

In the event the motorhome is inoperative due to malfunction of a warranted part, Warrantor will pay the cost of having the motorhome towed to an authorized repair facility provided you notify Warrantor prior to incurring the towing charges. Because Warrantor does not control the scheduling of service work by authorized servicing dealers, you may encounter some delay in scheduling and/or in completion of the repairs.

WHAT THE WARRANTY DOES NOT COVER:

This Limited Warranty does not cover: any motorhome sold or registered outside of the United States or Canada; exterior fiberglass and gel coat; items which are added or changed after the motorhome leaves Warrantor's possession; items that are working as designed but which you are unhappy with because of the design; normal wear and usage, such as fading or discoloration of fabrics, or the effects of moisture inside the motorhome; defacing, scratching, dents and chips on any surface or fabric of the motorhome; owner maintenance, including by way of example wheel alignments and resealing exterior sealant areas; the automotive chassis and power train, including, by way of example the engine, drivetrain, steering and handling, braking, wheel balance, muffler, tires, tubes, batteries and gauges; appliances and components covered by their own manufacturer's warranty including, by way of example the microwave, refrigerator, ice maker, stove, oven, generator, roof air conditioners, hydraulic jacks, VCR, television(s), water heater, furnace, stereo, radio, compact disc player, washer, dryer, inverter and cellular phone; or flaking, peeling and chips or other defects or damage in or to the exterior or finish caused by road hazards, airborne pollutants, salt, tree sap, hail, or any other cause. Component part and appliance manufacturers issue limited warranties covering portions of the motorhome not covered by the Limited Warranty issued by Warrantor. To learn more on what specific component parts and appliances are excluded from the Limited Warranty issued by Warrantor please contact your selling dealership or Warrantor directly or review the warranty packet inside the motorhome.

EVENTS DISCHARGING WARRANTOR FROM OBLIGATION UNDER WARRANTY:

Misuse or neglect, accidents, unauthorized alteration, failure to provide reasonable and necessary maintenance (see Owner's Manual), damage caused by off road use, collision, fire, theft, vandalism, explosions, overloading in excess of rated capacities or other utilization of the product contrary to its design instructions or intended uses, and odometer tampering shall discharge Warrantor from any express or implied warranty obligation to repair any resulting defect.

DISCLAIMER OF CONSEQUENTIAL AND INCIDENTAL DAMAGES:

THE ORIGINAL PURCHASER OF THE MOTORHOME AND ANY PERSON TO WHOM THE MOTORHOME IS TRANSFERRED, AND ANY PERSON WHO IS AN INTENDED OR UNINTENDED USER OR BENEFICIARY OF THE MOTORHOME, SHALL NOT BE ENTITLED TO RECOVER FROM WARRANTOR ANY CONSEQUENTIAL OR INCIDENTAL DAMAGES RESULTING FROM ANY DEFECT IN THE MOTORHOME, INCLUDING BY WAY OF EXAMPLE FUEL AND TRANSPORTATION EXPENSES TO DELIVER THE PRODUCT TO THE SERVICING DEALER, HOTEL ROOMS, LOST WAGES AND MOISTURE DAMAGE SUCH AS MOLD AND MILDEW. THE EXCLUSION OF CONSEQUENTIAL AND INCIDENTAL DAMAGES SHALL BE DEEMED INDEPENDENT OF, AND SHALL SURVIVE, ANY FAILURE OF THE ESSENTIAL PURPOSE OF ANY LIMITED REMEDY. Some states do not allow the exclusion or limitation of consequential or incidental damages, so the above exclusions may not apply to you.

LEGAL REMEDIES:

THESE LIMITED WARRANTIES ARE NOT INTENDED TO, AND DO NOT "EXTEND TO FUTURE PERFORMANCE." ANY ACTION SEEKING REMEDIES FOR BREACH OF WARRANTY OR SEEKING TO ENFORCE THIS LIMITED WARRANTY OR ANY IMPLIED WARRANTIES SHALL NOT BE COMMENCED MORE THAN ONE (1) YEAR AFTER THE EARLIER OF: (i) THE EXPIRATION OF THE WARRANTY COVERAGE PERIOD DESIGNATED ABOVE; (ii) THE FAILURE OF THE WARRANTOR TO REPAIR THE DEFECT AT ISSUE; OR, (iii) THE DATE ON WHICH THE BUYER'S ACTION ACCRUED UNDER APPLICABLE LAW. UNLESS PROHIBITED BY LAW, THE PERFORMANCE OF REPAIRS SHALL NOT SUSPEND THIS LIMITATIONS PERIOD FROM EXPIRING. THESE TERMS AND ALL WRITTEN AND IMPLIED WARRANTY DISPUTES BETWEEN WARRANTOR AND PURCHASER SHALL BE GOVERNED BY THE SUBSTANTIVE LAWS OF THE STATE OF OREGON, WITHOUT REGARD TO CONFLICTS OF LAW RULES. Some states do not allow the reduction in the statute of limitations, so the above reduction in the statute of limitations may not apply to you.

THIS WARRANTY GIVES YOU SPECIFIC LEGAL RIGHTS. YOU MAY ALSO HAVE OTHER RIGHTS, WHICH VARY FROM STATE TO STATE.

LARGER PRINT VERSION AVAILABLE WITHIN THE OWNERS MANUAL AND UPON REQUEST ADDRESSED TO YOUR SELLING DEALER OR WARRANTOR'S WARRANTY DEPARTMENT.

ROADMASTER® CHASSIS LIMITED WARRANTY – 2012

WHAT THE PERIOD OF COVERAGE IS:

This Limited Warranty provided by Monaco RV, LLC ("Warrantor") covers the components, assemblies and systems of your Roadmaster® Chassis not excluded under the section "What The Warranty Does Not Cover" for thirty-six (36) months from the original retail purchase date or the first 50,000 miles of use, whichever occurs first. If you use the Roadmaster Chassis that your motorhome is mounted upon for any rental, commercial or business purposes whatsoever, this Limited Warranty covers your new Roadmaster Chassis for ninety (90) days from the original retail purchase date or the first 24,000 miles of use, whichever occurs first. A conclusive presumption that the Roadmaster Chassis has been used for commercial and/or business purposes arises if you have filed any tax or other form claiming any business use, ownership, or tax benefit related to your motorhome. This Limited Warranty applies to all owners, including subsequent owners, of the Roadmaster Chassis. However, a subsequent owner must submit a warranty transfer form by filing the form and paying the transfer fee. A subsequent owner's warranty coverage period is the remaining balance of the warranty coverage period the prior owner was entitled to under this Limited Warranty. Warranty transfer forms can be obtained by contacting the Customer Relations Department. There is a one time, $250 processing fee for the transfer.

LIMITATION AND DISCLAIMER OF IMPLIED WARRANTIES:

IMPLIED WARRANTIES, IF ANY, ARISING BY WAY OF STATE LAW, INCLUDING ANY IMPLIED WARRANTY OF MERCHANTABILITY AND ANY IMPLIED WARRANTY OF FITNESS FOR A PARTICULAR PURPOSE, ARE LIMITED IN DURATION TO THE TERM OF THIS LIMITED WARRANTY AND ARE LIMITED IN SCOPE OF COVERAGE TO THOSE PORTIONS OF THE CHASSIS COVERED BY THIS LIMITED WARRANTY. WARRANTOR DISCLAIMS ALL IMPLIED AND EXPRESS WARRANTIES, INCLUDING THE IMPLIED WARRANTY OF MERCHANTABILITY AND THE IMPLIED WARRANTY OF FITNESS FOR A PARTICULAR PURPOSE, ON COMPONENTS AND APPLIANCES EXCLUDED FROM COVERAGE AS SET FORTH BELOW. There is no warranty of any nature made by Warrantor beyond that contained in this Limited Warranty. No person has authority to enlarge, amend or modify this Limited Warranty. The dealer is not the Warrantor's agent but is an independent entity. Warrantor is not responsible for any undertaking, representation or warranty made by any dealer or other person beyond those expressly set forth in this Limited Warranty. Some states do not allow limitations on how long an implied warranty lasts, so the above limitation may not apply to you.

WHAT THE WARRANTY COVERS:

Warrantor's Limited Warranty covers defects in the manufacture of the Roadmaster Chassis and defects in materials used to manufacture the Roadmaster Chassis. "Defect" means the failure of the Roadmaster Chassis and/or the materials used to assemble the Roadmaster Chassis to conform to Warrantor's design and manufacturing specifications and tolerances. Also see the section "What the Warranty Does Not Cover" set out below.

WHAT WE WILL DO TO CORRECT PROBLEMS:

Warrantor's sole and exclusive obligation is to repair and/or replace, at its option, any covered defect if: (1) you notify Warrantor or one of its authorized servicing dealers of the defect within the warranty coverage period and within five (5) days of discovering the defect; and (2) you deliver your Roadmaster Chassis to Warrantor or Warrantor's authorized servicing dealer at your cost and expense. It is reasonable to expect some service items to occur during the warranty period. The performance of warranty repairs shall not extend the original warranty coverage period. Further, any performance of repairs after the warranty coverage period has expired or any performance of repairs to component parts and appliances that are excluded from coverage shall be considered "good will" repairs, which shall not alter the express terms of this Limited Warranty. If the repair or replacement remedy fails to successfully cure a defect after Warrantor received a reasonable opportunity to cure the defect(s), your sole and exclusive remedy shall be limited to Warrantor paying you the cost of having an independent third party perform repair(s) to the defect(s). Warrantor may use new and/or remanufactured parts and/or components of substantially equal quality to complete any repairs.

Imperfections and/or damage to surfaces, trim, and other appearance items may occur at the factory during manufacture, during delivery of the motorhome to the selling dealer or on the selling dealer's lot. Normally, any such damage is detected and corrected at the factory or by the selling dealer during the inspection process performed by the Warrantor and the selling dealer. If, however, you discover any such imperfection or damage when you take delivery of the motorhome, you must notify your dealer or Warrantor within five days of the date of purchase to have repairs performed at no cost to you in accordance with this Limited Warranty. If not reported within this time, such imperfections are conclusively presumed to be the result of normal wear and tear.

If a servicing dealer is unable or unwilling to solve a problem you are convinced is covered by the Limited Warranty, or that concerns the safety of your Roadmaster Chassis, or that may involve local consumer protection or "lemon" laws, then you **must**, to the extent permitted by law, **notify Warrantor directly in writing** of the failure to successfully repair the defect(s) so that Warrantor can become directly involved in performing a successful repair.

HOW TO GET SERVICE:

For warranty service simply contact one of Warrantor's authorized service centers for an appointment, then deliver your Roadmaster Chassis (at your expense) to the service center. If you need assistance in locating an authorized warranty service facility, contact Warrantor's Warranty Department (1-877-466-6226). The mailing address is:

91320 Coburg Industrial Way
Coburg, Oregon 97408

HOW TO GET SERVICE (cont'd):

In the event the Roadmaster Chassis is inoperative due to malfunction of a warranted part, Warrantor will pay the cost of having the motorhome towed to the nearest authorized repair facility provided you notify Warrantor prior to incurring the towing charges. Because Warrantor does not control the scheduling of service work by authorized servicing dealers, you may encounter some delay in scheduling and/or in the completion of the repairs.

WHAT THE WARRANTY DOES NOT COVER:

This Limited Warranty does not cover: any vehicle sold or registered outside the United States or Canada, modifications and alterations to the Roadmaster Chassis by others; the motorhome that is mounted upon the Roadmaster Chassis, including by way of example the motorhome manufacturer's design, manufacture, assembly and/or installation of the side walls, roof, windows, flooring, electrical system, plumbing system, LP-Gas system, appliances and slide outs; items that are working as designed but which you are unhappy with because of the design; normal wear and usage; routine maintenance, including by way of example wheel alignments; component parts covered by their own manufacturer's warranty, including by way of example the engine, radiator, transmission, tires, tubes, batteries, alternators, exhaust system and the emission control systems, leveling systems and their components, shocks, and HVAC systems and their components; and, flaking, peeling, rusting and chips or other defects or damage in or to the frame and frame cross members, whether caused by rocks or other road hazards, the environment, airborne pollutants, salt, or any other source. Component part manufacturers issue limited warranties covering portions of the Roadmaster Chassis not covered by the Limited Warranty issued by Warrantor. To learn more on what specific component parts are excluded from the Limited Warranty issued by Warrantor please contact your selling dealership or Warrantor directly or review the warranty packet inside the Motorhome.

EVENTS DISCHARGING WARRANTOR FROM OBLIGATION UNDER WARRANTY:

Misuse or neglect, accidents, unauthorized alteration, failure to provide reasonable and necessary maintenance (see Owner's Manual), damage caused by off road use, collision, fire, theft, vandalism, explosions, overloading in excess of rated capacities or other utilization of the product contrary to its design instructions or intended uses, and odometer tampering shall discharge Warrantor from any express or implied warranty obligation to repair any resulting defect.

DISCLAIMER OF CONSEQUENTIAL AND INCIDENTAL DAMAGES:

THE ORIGINAL PURCHASER OF THE ROADMASTER CHASSIS AND ANY PERSON TO WHOM THE ROADMASTER CHASSIS IS TRANSFERRED, AND ANY PERSON WHO IS AN INTENDED OR UNINTENDED USER OR BENEFICIARY OF THE ROADMASTER CHASSIS, SHALL NOT BE ENTITLED TO RECOVER FROM WARRANTOR ANY CONSEQUENTIAL OR INCIDENTAL DAMAGES RESULTING FROM ANY DEFECT IN THE ROADMASTER CHASSIS, INCLUDING BY WAY OF EXAMPLE FUEL AND TRANSPORTATION EXPENSES TO DELIVER THE PRODUCT TO THE SERVICING DEALER, HOTEL ROOMS, LOST WAGES AND WATER DAMAGE. THE EXCLUSION OF CONSEQUENTIAL AND INCIDENTAL DAMAGES SHALL BE DEEMED INDEPENDENT OF, AND SHALL SURVIVE, ANY FAILURE OF THE ESSENTIAL PURPOSE OF ANY LIMITED REMEDY. Some states do not allow the exclusion or limitation of consequential or incidental damages, so the above exclusions may not apply to you.

LEGAL REMEDIES:

THESE LIMITED WARRANTIES ARE NOT INTENDED TO, AND DO NOT "EXTEND TO FUTURE PERFORMANCE." ANY ACTION SEEKING REMEDIES FOR BREACH OF WARRANTY OR SEEKING TO ENFORCE THIS LIMITED WARRANTY OR ANY IMPLIED WARRANTIES SHALL NOT BE COMMENCED MORE THAN (1) ONE YEAR AFTER THE EARLIER OF: (i) THE WARRANTY COVERAGE PERIOD DESIGNATED ABOVE; (ii) THE FAILURE OF THE WARRANTOR TO REPAIR THE DEFECT AT ISSUE; OR, (iii) THE DATE ON WHICH THE BUYER'S ACTION ACCRUED UNDER APPLICABLE LAW. UNLESS PROHIBITED BY LAW, THE PERFORMANCE OF REPAIRS SHALL NOT SUSPEND THIS LIMITATIONS PERIOD FROM EXPIRING. THESE TERMS AND ALL WRITTEN AND IMPLIED WARRANTY DISPUTES BETWEEN WARRANTOR AND PURCHASER SHALL BE GOVERNED BY THE SUBSTANTIVE LAWS OF THE STATE OF OREGON, WITHOUT REGARD TO CONFLICTS OF LAW RULES. Some states do not allow the reduction in the statute of limitations, so the above reduction in the statute of limitations may not apply to you.

THIS WARRANTY GIVES YOU SPECIFIC LEGAL RIGHTS. YOU MAY ALSO HAVE OTHER RIGHTS, WHICH VARY FROM STATE TO STATE.

LARGER PRINT VERSION AVAILABLE WITHIN THE OWNERS MANUAL AND UPON REQUEST ADDRESSED TO YOUR SELLING DEALER OR WARRANTOR'S WARRANTY DEPARTMENT.

2012 Diplomat

Section 1 - General Information 3
Section 2 - Driving & Safety 9
Section 3 - Exterior & Interior Care 55
Section 4 - Appliances 79
Section 5 - Equipment 105
Section 6 - Water Systems 133
Section 7 - Propane Systems 151
Section 8 - House Electrical Systems 163
Section 9 - Chassis Electrical Systems 189
Section 10 - Chassis Information 211
Index 273

The information contained in this document is intended to reflect standard and optional equipment included in a typically equipped model at the time of delivery to the initial retail owner. Your actual unit may vary from this document as a result of optional equipment that is not generally offered on this model. In the case that you are not the initial retail owner of the unit, this document will not reflect modifications that may have been performed by previous owners.

Product information and specifications are shown herein as of the time of printing. The motorhome manufacturer reserves the right to change product specifications, designs and standard equipment without notice and without incurring obligation.

©Copyright Monaco RV, LCC. All rights reserved. All other trademarks or registered trademarks are property of their respective holders. Brand name products of other companies mentioned in this manual are not endorsed by the manufacturer of the motorhome.

Check online for Addendums or Tech Tips that may apply to your motorhome.

MANUAL ADDENDUMS & TECH TIPS

www.monaco-online.com

Click on the **brand** logo, then click on **SERVICE** link and choose either **MANUAL ADDENDUMS** or **TECH TIPS** from the menu.

General Information

Section 1

WARRANTY INFORMATION FILE 4
REPORTING SAFETY DEFECTS 4
SAFETY TERMS 4
GLOSSARY OF TERMS 5
LIMITED WARRANTY TRANSFER APPLICATION 8

CALIFORNIA PROPOSITION 65 WARNING:

Most vehicles, including this one, contain and/or emit chemicals known to the State of California to cause cancer and birth defects or other reproductive harm. Engine exhaust and a wide variety of vehicle fluids, components, and parts—including building materials used in the interior furnishings in this vehicle—contain and/or emit these chemicals, including formaldehyde. In addition, battery posts, terminals and related accessories contain lead and lead compounds, chemicals known to the State of California to cause cancer and reproductive harm. Wash hands after handling. Consult with your doctor or other health professional for further advice concerning exposure from this vehicle to chemicals known to the State of California to cause cancer and reproductive harm.

WARRANTY INFORMATION FILE

In addition to this Owner's Manual, a Warranty Information File Box can be found in the motorhome. This box contains valuable documents about the motorhome's systems and equipment. Many of the component manufacturer warranty registration cards can be found in the box. They will need to be filled out and mailed. Careful reading and understanding of all the information in this box will help in the safe operation, maintenance and troubleshooting of the systems and equipment.

Additional Information:

Changes, additions and supplemental information in the form of Manual Addendums and "Tech Tips" can be obtained by visiting our Web Site at www.monaco-online.com. Select one of the products from the product lineup. Go to the Service menu. A submenu will appear.

It may also be helpful to browse the "Tech Tips" menu for the other product lines. The tips may not completely apply to a particular model, but information contained therein can be useful.

REPORTING SAFETY DEFECTS

If you believe that your motorhome has a defect which could cause a crash or could cause injury or death, you should immediately inform the National Highway Traffic Safety Administration (NHTSA) in addition to notifying Monaco RV, LCC.

If NHTSA receives similar complaints, it may open an investigation, and if it finds that a safety defect exists in a group of vehicles, it may order a recall or remedy campaign. However, NHTSA cannot become involved in individual problems between you, your dealer or Monaco RV, LCC. To contact NHTSA, you may call the Vehicle Safety Hot line toll-free at 1-888-327-4236 (TTY: 1-800-424-9153); go to *http://www.safercar.gov*; or write to: Administrator, NHTSA, 1200 New Jersey Avenue, SE, Washington, DC, 20590. You can also obtain other information about motor vehicle safety from *http://www.safercar.gov.*

SAFETY TERMS

Many of the safety terms are personal safety instructions. Definitions for the terms are listed below. It is important to thoroughly read and understand the safety instructions displayed throughout the manual. Failure to comply with specific instructions may result in personal injury or death. Many instructions are required by National Safety Associations.

CAUTION:
Cautions pertain to potential damage to the motorhome and/or its components.

POISON:
A warning or caution pertaining to safety and/or use of a poisonous substance or harmful chemical.

NOTE:
Information and reminders concerning proper operation of the motorhome and/or its components.

WARNING:
Warnings contain information regarding personal safety and/or pertaining to potential extensive or permanent damage to the motorhome or its components by means of hazards or improper use.

INSPECTION:
Inspection of the motorhome and/or its components is required. Additional instruction may follow.

LUBE:
Lubrication, or addition of a lubricant product, to the motorhome and/or a specified component or part is required. Additional instruction may follow.

ASSEMBLE or REPAIR:
Assembly, disassembly or installation of a component or part, and/or repair to the motorhome may be required. Assistance of Technical Support or Technician may be necessary.

INFORMATION:
References to additional information regarding operation of the motorhome and/or its components found in additional sources, other than the Owner's Manual. Also refers to the Warranty Information File, found within the Warranty Information Box in the motorhome.

TIP:
Tips contain information, helpful hints and/or suggestion for ease of operation of the motorhome or its components.

GLOSSARY OF TERMS

AC Electricity - Alternating current also known as household power.

Air Compressor - Pumps air to and builds air pressure in an air system.

Air Dryer - Cools, filters and dries the air delivered by an air compressor.

Air Governor - Controls the operation of the air compressor by constantly monitoring air pressure in the supply tank of the air system. The air governor initiates the unload cycle when the cut-out pressure is reached.

Alternating Current (AC) - A current that varies periodically in magnitude and direction. A battery does not deliver alternating current. Also referred to as shore power, utility power, inverter power (if equipped), generator power, etc.

Ampere (Amp) - The measure of electron flow rate (current) through a circuit.

Ampere-hour (Amp-hr. AH) - A unit of measure for a battery electrical storage capacity, obtained by multiplying the current in amperes by the time in hours of discharge. *Example:* A battery which delivers 5 amperes for 20 hours, delivers 5 amperes times 20 hours, or 100 Amp-Hr. of capacity.

ANSI - American National Standards Institute.

ASTM - American Society for Testing and Materials.

Black Water - Term associated with the sewage holding tank. The toilet drains directly into this tank.

CCA - Cold Cranking Amperage is the amount of current a battery can deliver for 30 seconds at 0° F without dropping below a specified voltage, usually 10.5 Volts DC.

Chassis Battery - Powers chassis 12 Volt accessories and starts engine.

Circuit - An electric circuit is the path of an electric current. A closed circuit has a complete path. An open circuit has a broken or disconnected path.

City Water - A term associated with the water supply at campgrounds. It is called city water because water is pulled from a central source (like in a city) and not the fresh water tank.

Compressor Load Cycle - The time during which the air compressor is building air pressure in an air system.

Compressor Unload Cycle - The time during which the air compressor is idling and is not building air pressure in an air system.

Curbside - This refers to the side of the motorhome that faces the curb when it is parked. Often called the door side or the passenger side.

Current - The rate of flow of electricity or the movement rate of electrons along a conductor. It is comparable to the flow of a stream of water. The unit of measure for current is the ampere.

Cut-In Pressure - The pressure level in the air system supply tank which tiggers the compressor load cycle.

Cut-Out Pressure - The pressure level in the air system supply tank which triggers the compressor unload cycle.

Cycle - A battery discharge and subsequent recharge equals one cycle.

Desiccant - A granular substance that has a high affinity for water and is used to retain moisture from the air stream flowing through the air dryer cartridge.

DC Electricity - Direct current also known as battery power.

Direct Current (DC) - Power that is stored in a battery bank or supplied by photovoltaics, alternator, chargers and DC generators. Direct current is also known as battery power. Current only flows one way.

Drain Trap - This is a curve that is in all drains. Water is trapped in the curve and this creates a barrier so tank odors cannot escape through the drain.

Dry Camping - Camping in the motorhome when there is no city water hook-up or shore power. In other words, using only the water and power that is in the motorhome and not from another source.

Drying Cycle - The time during which the air dryer cools, filters and removes moisture from the air delivered by the air compressor. The drying cycle begins and ends the same as the compressor load cycle.

Dump Station - A site where the waste (grey) and sewage (black) tanks can be drained. In most states it is illegal to drain waste tanks anywhere other than at a dump station.

Dump Valve - Another name for the T-handle valve used to drain the sewage (black) and waste (grey) tanks.

Escape (Egress) Window - The formal name for the emergency exit window located in the motorhome. Egress windows are identified by their red handles.

Full Hook-Up Site - A campground that has city water, shore power and sewer hook-ups or connections available.

Grey Water - Term associated with the waste water holding tank. Water from the sink drains, the shower and the washer-dryer (if equipped) go into this tank.

House Battery - Powers 12 Volt DC lights and accessories inside motorhome.

HVAC - Heating, Ventilation and Air Conditioning

LED (Light Emitting Diode) - Indicator light.

Liquid Lead Acid Battery (LLA) - A type of battery that uses liquid as an electrolyte. This type of battery requires periodic maintenance such as cleaning the connections and checking the electrolyte level.

Low Point Drain - The lowest point in the plumbing. Drains are placed here so water will drain out of the lower end of the motorhome. Drains must be closed when the water tank is filled.

OEM - Term for Original Equipment Manufacturer.

OHM - A unit for measuring electrical resistances.

Ohm's Law - Expresses the relationship between Volt (E), amperes (I) in an electrical circuit with resistance (R). It can be expressed as follows: E = IR. If any two of the three values are known, the third value can be calculated by using the above formula.

Potable Water - Water that is safe for human consumption.

Potentiometer - A device for measuring an unknown potential difference or electromotive force.

Pounds Per Square Inch Gauge (psig) - Pressure measured with respect to that of the atmosphere. This is a pressure gauge reading in which the gauge is adjusted to read zero at the surrounding atmospheric pressure. It is commonly called gauge pressure.

Purge - The initial blast of air (decompression) from the air dryer purge valve at the beginning of the air compressor.

Purge Cycle - The time during which the air dryer is undergoing purge and regeneration. This cycle starts at the beginning of the compressor unload cycle and normally ends well before the beginning of the compressor load cycle.

Regeneration - The mild backflow of air through the air dryer and out the purge valve that begins immediately after the purge and lasts normally 10 to 15 seconds. This backflow of air, from the air system and through the air dryer, removes moisture from the desiccant cartridge and prepares the air dryer for the next compressor load cycle.

Roadside - The side of the motorhome that faces the road while parked. Often called the off-door side or the driver side.

SCA - Term for Supplemental Coolant Additive. Chemical added to coolant for diesel engines to help prevent cylinder liner pitting and internal corrosion.

Shore Line - The electrical cord which runs from the motorhome to the campground 120/240 Volt AC electrical supply.

Stinger - An arm attachment on a tow truck that is used to lift the motorhome slightly for towing.

Volt - The unit of measure for electric potential.

Watt - The unit for measuring electrical power, i.e. the rate of doing work, in moving electrons by or against an electric potential.

Wet Cell Battery - A type of battery that uses liquid as an electrolyte. This type of battery requires periodic maintenance to clean the connections and check the electrolyte level.

LIMITED WARRANTY TRANSFER APPLICATION/CHANGE OF OWNER INFORMATION

Mail to:

Monaco RV LLC
Warranty Transfer
91320 Coburg Industrial Way
Coburg, OR 97408

Please read terms and representations below before signing.

Submitted By:

Name:_____

Address:_____

City:_____ State:_____ Zip:_____

Phone: (_____) _____

☐ Limited Warranty Transfer

☐ Address Change

A. Current Owner Information:

_____ _____ _____
First Name Initial Last Name

_____ _____ – _____ _____
Vehicle Identification Number Unit # (15 digits) (6 digits) Model/Year

B. New Owner Information, Transfer Coverage To:

_____ _____ _____
First Name Initial Last Name

(_____) _____ _____ _____ _____
Phone Number Street Address City State Zip

_____ _____
Date of Transfer (If Applicable) Odometer Reading at Transfer (If Applicable)

C. Signatures:

_____ _____ _____ _____
(New) Owner's Signature Date Selling Dealer's Signature (If Applicable) Date

Terms & Representations

By your signature(s) on face side of this form, and in order to induce Monaco RV, LLC to transfer its Limited Warranty, you represent the following:

1. That you have received and read a copy of the Limited Warranty.
2. You understand that the unit is to be used only for family camping and cross country travel on improved roads.
3. All information provided by you on face side of this form is true and correct.
4. You understand that you are purchasing a pre-owned recreational vehicle and Monaco RV, LLC does not make any representation as to its present condition.

TEAR OFF PAGE. MAIL WARRANTY TRANSFER FORM TO:

WARRANTY TRANSFER, MONACO RV, LLC.
91320 COBURG INDUSTRIAL WAY
COBURG, OR 97408

Driving & Safety

Section 2

DRIVING & SAFETY 10
- Inspections 10
- Familiarize Yourself 10
- Mirror Adjust 10
- Safety Seat Belts 11

DRIVING TIPS 12
- Adjust to Driving Conditions 13

TRIP PREPARATION 15

HITCH 16
- Using the Rear Receiver 16
- Tow Plug Connection 19

REAR VISION SYSTEM 19

BACKING UP A MOTORHOME 20

SET-UP PROCEDURES 21

DRY CAMPING 22

BREAKING CAMP 23

EMERGENCY ROADSIDE PROCEDURES 25
- In Case of Flat Tire 25
- Dead Chassis Battery 25

TOWING PROCEDURES 27
- Disabling Parking Brake 28

TIRES 29
- Importance of Air Pressure 29
- Load Inflation Table 29
- Inspecting & Pressure 30
- Air Pressure Checklist 31
- Tire Support When Leveling 32
- Tire Vibration 32
- Tire Rotation 32
- Tire Replacement 32
- Storage of Tires - Long Term 33

WHEEL MOUNTING 34

WEIGHING THE MOTORHOME 35
- Tire Pressure 37
- Scales 38
- Four-Point Weighing 38
- Weight Record Sheet 41

WEIGHING THE MOTORHOME-TAG AXLE 42
- Weight Terms 43
- Tag Axle Regulator 44
- Tag Axle Adjustment 45
- Tire Pressure 46
- Scales 46
- Six-Point Weighing 47
- Weight Record Sheet Tag Axle 49

SMOKE DETECTOR 50
- Operation 50
- Testing 50
- Maintenance 50
- Troubleshooting 50

CARBON MONOXIDE DETECTOR 51
- Operation 52
- Alarm 52
- Testing 52
- Cleaning & Maintenance 53

FIRE EXTINGUISHER 53
- Maintenance 53

ESCAPE (EGRESS) WINDOW 54

DRIVING & SAFETY

Section Two contains information on driving tips, emergency situations, towing, safety devices, weighing the motorhome and tires.

NOTE:
The motorhome has electronic data recording devices that may record information about direction, road speed, engine speed, brake application, steering attitude or other vehicle operating data. Data recording devices can be present in engines, transmissions, ABS (Antilock Brake Systems) or other systems affiliated with operation of the vehicle. Information from data recording devices can be examined in case of an accident. Contact the component manufacturer to learn more about these devices.

Inspections

Differences between a passenger automobile and a motorhome are significant. Always be aware of these differences when traveling. The key to safely operating a motorhome is inspection. Undetected problems could cause problems on the road and may result in lost time and increased repair costs. Several states require a special license endorsement and motorhome inspection prior to registration. Know and observe the laws of the states in which the motorhome will be traveling. Laws may vary from state to state. A systematic inspection conducted prior to moving the motorhome can help ensure nothing is overlooked and will assist in familiarizing the owner with the motorhome.

Prior to moving the motorhome perform a general inspection. Examine the condition of the motorhome and the surrounding area. Look high and low when walking around the motorhome.

Familiarize Yourself

The location of the driver's seat is higher and farther to the left than most vehicles causing a different perspective of the roadway. Use the outside mirrors to gauge the center of the road and to check conditions behind the motorhome. The dashboard may include more gauges and controls than are normally found in passenger automobiles. Become familiar with these gauges and their indications before starting out.

Mirror Adjust

Adjust the mirrors prior to starting out. Have an assistant help to ease the mirror adjustment process.

Mirror Adjusting:

- Tools needed: Allen wrench, flat blade screw driver and socket wrench.
- Adjust the driver seat to the travel position.
- Remove plug at the bottom of the arm.
- Use a socket wrench to loosen the bolt located at the base of the arm (point A).
- Adjust the mirror for a clear side view of the motorhome.
- Tighten the bolt once the proper adjustment is made.
- Reinstall the plug.
- To adjust the "head" of the mirror, loosen the set screws located below the mirror shown as point B. Adjust the head of the mirror to the left or right.
- Manually adjust the bottom section of the mirror.
- Tighten set screws once the proper adjustment is made.
- Repeat procedure for passenger side mirror.
- Use the mirror adjust switch located on the driver's console to fine tune the view.

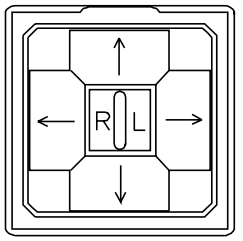

080378

Mirror adjust switch

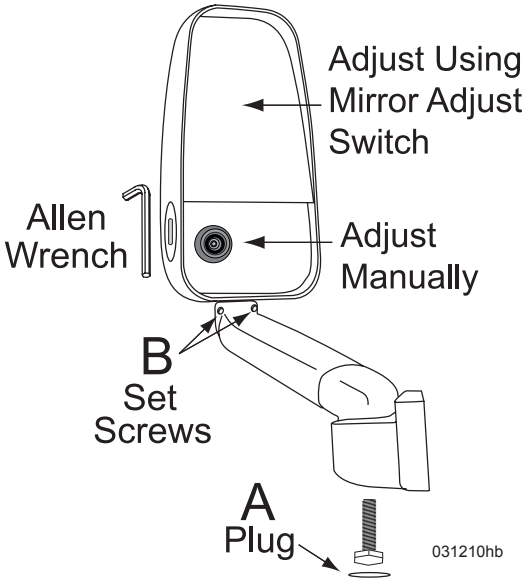

Safety Seat Belts

All occupants must be furnished with and use seat belts while the motorhome is moving. The driver's seat, and all other seats designed to carry passengers while the motorhome is in motion, are equipped with safety seat belts. Do not occupy beds or seats that are not equipped with a safety belt while the motorhome is in motion. The driver's seat must be locked in the forward facing position while motorhome is in motion. Seat belts are designed for individual use. Do not use a seat belt for more than one person.

To fasten the seat belt, pull the belt out of the retractors and insert the tab into the buckle; a click will sound when the tab locks into the buckle. Seat belt lengths automatically adjust to each occupants size and sitting position. Do not route belts over armrest or under the arm.

WARNING:
Safety belts are supplied at affixed seating positions. Do not occupy seats not equipped with safety belts while the motorhome is in motion. Seat belts must only be used on permanently mounted seats. Do not use a single seat belt on more than one person. Pilot and Co-pilot seats must be locked in a forward facing position with seat belts fastened while the motorhome is in motion. Do not rotate the seat while in transit.

Child Passenger Safety:

Child restraint requirements are determined by age *and* weight. According to NHTSA (National Highway Traffic Safety Administration), there are four stages to child restraint safety.

WARNING:
Refer to the manufacturer of the child seat for installation guidelines. Adhere to all instructions, cautions and warnings for proper securement of the child safety seat or booster seat.



020355

Step 1:


020356

For the best possible protection keep infants in the back seat, in rear-facing child safety seats, as long as possible up to the height or weight limit of the particular seat. At a minimum, keep infants rear-facing until a minimum of age 1 and at least 20 pounds.

Step 2:



When children outgrow their rear-facing seats (at a minimum age 1 and at least 20 pounds) they should ride in forward-facing child safety seats, in the back seat, until they reach the upper weight or height limit of the particular seat (usually around age 4 and 40 pounds).

Step 3:



Once children outgrow their forward-facing seats (usually around age 4 and 40 pounds), they should ride in booster seats, in the back seat, until the vehicle seat belts fit properly. Seat belts fit properly when the lap belt lays across the upper thighs and the shoulder belt fits across the chest (usually at age 8 or when they are 4', 9" tall).

Step 4:

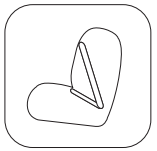

When children outgrow their booster seats, (usually at age 8 or when they are 4'9" tall) they can use the adult seat belt in the back seat, if it fits properly (lap belt lays across the upper thighs and the shoulder belt fits across the chest). All children under age 13 should ride in the back seat.

NOTE:
The motorhome manufacturer is not the author of Child Passenger Safety. The information provided is reprinted from the National Highway Traffic Safety Administration's website. Visit NHTSA's website at www.nhtsa.gov for the most recent and up to date information.

Tips:

- Go to **www.nhtsa.gov** and choose "Child Safety Seat Information" from the menu or click on the child passenger safety icon. The site includes child safety seat installation tips, product ratings, recalls and other useful information.

- For more information about child safety seats, booster seats, inspection/fitting stations in your area, seat belts, air bags, and other highway safety issues, call the DOT Vehicle Safety Hotline at: **1-888-327-4236**.
- A certified child passenger safety technician can check your installation and answer questions. To find a technician or an inspection station near you, go to **www.nhtsa.gov**, click on the child passenger safety icon, and then click on the Fitting/Inspection Station link, or go to **www.seatcheck.org**.

The child safety seat can be positioned in two places: the front passenger (co-pilot) seat and forward facing permanently mounted booth dinette seat equipped with safety belts.

NOTE:
Individual states and Canadian provinces may have laws that can exceed the requirements as described in this section. It is the responsibility of the owner to know and comply with the laws in the state or province in which the motorhome will travel.

NOTE:
Use of a safety or booster seat in the front seat may be prohibited in some states and Canadian provinces.

WARNING:
Do not transport children unrestrained. Infants must be placed in approved safety seats - small children must be restrained in child safety seats. Do not use a single seat belt on more than one child. Failure to comply with these rules can lead to injury or death.

WARNING:
Because many styles of safety and booster seats are available, refer to the safety seat OEM manual for proper installation and how to properly install and secure the safety or booster seat.

Seat Belt Care:
Keep the belt clean and dry. Clean with mild soap and lukewarm water. Do not use bleach, dye or abrasive cleansers that may weaken the belt material. Periodically inspect belts for cuts, frays or loose parts, and replace damaged parts. Do not disassemble or modify the system. Replace the seat belt assembly after a severe impact, even when damage is not obvious.

DRIVING TIPS



The motorhome is a complex vehicle that requires increased driving awareness because of its size and various components. Turning radius will be much wider than that of a standard automobile due to increased length. Pay close attention to the perimeter of the motorhome including front, sides, rear, roof and undercarriage. Ensure the surrounding area is clear of obstacles. Use the mirrors to observe traffic conditions as well as the exterior including tires, bay doors, blind spots, etc.

Use a push-pull method of steering, with both hands parallel on the steering wheel. The motorhome is considerably heavier than an automobile and has a higher center of gravity. These factors will necessitate advanced reaction time. Swerving and sharp cornering performed high speeds could result in loss of control.

Keep size and weight of the motorhome in mind. Drive with increased caution to avoid situations that might require quick momentum changes. Increase reaction time by paying attention to traffic and road conditions 12 to 15 seconds ahead.

The motorhome will travel safely and comfortably at highway speed limits. However, it takes more time to reach highway speed. When passing another vehicle, allow extra time and space to complete the pass due to increased length.

Manually shift to a lower gear when descending a long hill. Begin the descent at a slow speed. Do not allow the motorhome to gain momentum before trying to slow down. Use the engine brake in conjunction with the service brakes to help maintain a slow, safe descent. The transmission and engine will help control downhill speed and can extend the service life of the brake lining. Distance required to stop the motorhome is greater than an automobile. Practice stopping away from traffic to get the feel of distance required to stop.

Note weight limits of bridges before crossing. Signs should be posted at bridge entrances. Check posted height of all overpasses and situations where overhead clearance is limited. Keep in mind road surfaces may be repaved or packed with snow; therefore, the actual posted clearance would be less in such conditions.

Use the pilot seat controls to comfortably position the seat. Stay seated and adjust the outside mirrors if necessary to gain a clear line of vision down both sides of the motorhome.

Adjust to Driving Conditions

Adjusting to road, weather and terrain conditions is necessary to keep the motorhome under control. Pay attention to road signs that advise of local road hazards and driving conditions. Do not operate the motorhome when road, weather and terrain conditions seem unsafe.

The cockpit, dash area and windshield are larger than those found on passenger cars and trucks. Keep the windshield clear of humidity in the form of water or ice. Start the motorhome and turn on the dash defrost to help remove moisture from inside the windshield. It may be necessary to use a clean cloth to wipe away moisture. Do not operate the motorhome if the windshield is not clear.

Keep windshield wipers in good working order at all times. Do not operate the motorhome when road, weather and terrain conditions seem unsafe.

Driving Cautions:

- Avoid getting too close to the shoulder of the road, which may be too soft to support the weight of the motorhome.
- Side spacing is best maintained by keeping the motorhome centered in the driving lane.
- Driving lanes in work zones can be uneven, congested and more narrow than usual.
- Be cautious of road debris that can damage the undercarriage of the motorhome or become lodged in the dual tires and cause damage to the tires, wheel rims or tow vehicle.
- Avoid deflating the tag axle on uneven surfaces as chassis ground clearance is reduced.

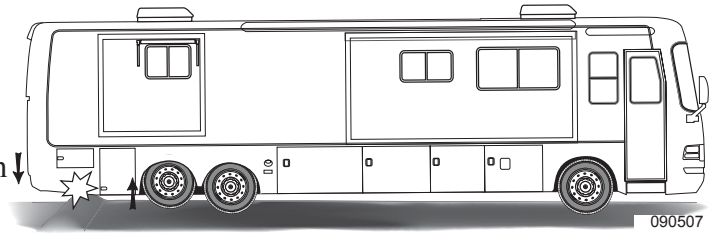

- On back roads and single divided roads, tree branches and shrubbery can protrude into the roadway. Watch for low hanging branches especially during inclement weather. Rain and snow will cause branches to hang lower than usual.
- Keep in mind that posted speed signs are usually passenger automobile rated. Be extra aware of driving conditions and use the appropriate speed for a motorhome when necessary, especially on corners and mountain roads.
- Downgrade speed should be at least 5 mph less than upgrade speed, or downgrade speed should be attainable within three seconds of a brake application.
- Use a four second rule when following other vehicles at speeds under 40 mph. Use a five second rule when following at speeds over 40 mph.

Right Turns:

Negotiating a right hand turn in a motorhome can be difficult. Many drivers fear they cannot make the turn without entering into the other lane or jumping the curb. Here are a few tips to make a right hand turn easier:

- As the turn approaches, look into the mirror to ensure the lane to the left is clear, then move wide over to the left.
- When making the right turn, the left rear wheel should touch the center line of the road and the driver's hips should be parallel to the roadside curb of the corner being turned to aid in avoiding a premature turn.
- Make the turn slowly.
- Check mirrors frequently. Stay aware of necessary clearance and space management of the motorhome while negotiating the turn.

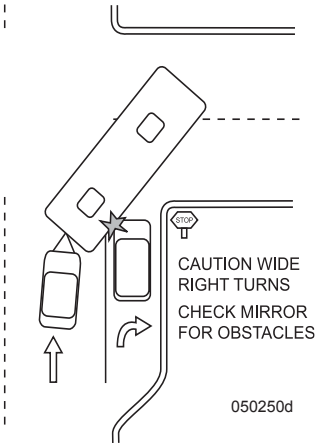

Left Turns:

- Do not proceed with the turn until the driver's seat is aligned with the center of the intersection. If two lanes are available, use the right hand lane. Vehicles or objects are more easily seen by the driver on the left hand side.

Ascending a Grade:

When approaching a grade, assess the grade and length before ascending. Prepare early for a long ascent. Unlike gasoline engines, diesels do not necessarily produce more power by pressing further on the accelerator.

Power output from a diesel depends on the following circumstances:

- **RPM** - Every engine has a RPM range that produces the most efficient torque curve.
- **Fuel/Air Mixture** - Even though the engine is equipped with a turbocharger, there is a limit to how much air can be compressed into the combustion chamber. Conversely there is a limit to how much fuel can be injected to produce the most efficient state of combustion.

The drivetrain is more efficient when temperatures remain stable during long grades.

IMPORTANT SAFETY TIP:
Turn on the hazard lights if road speed decreases to the point where the motorhome is moving significantly under the posted speed. Use pullouts if traffic is accumulating. Once in a pullout, if there is sufficient clearance for safety, idle the engine for a while to allow the exhaust and the turbo to cool. While these are cooling, the transmission will also cool. Continually monitor the gauges while waiting.

Descending a Grade:

Prepare to descend a grade at the crest of the hill. Observe any signs indicating grade angle and duration. The sign may suggest maximum downhill speed according to Gross Combined Weight (the combined weight of the motorhome and a trailer/tow car). At the crest of the hill, manually shift the transmission into a lower gear. **Do not** allow the motorhome to gain momentum before slowing down.

Use the engine brake to help maintain a slow, safe downhill speed. With the engine brake applied, road speed may still increase and the transmission may automatically shift to the next higher gear. Apply the brakes using moderately heavy pressure on the brake pedal to reduce speed then manually downshift to maintain a safe, slow speed. Do not pump the brakes. This can result in a loss of air pressure. Riding the brakes can cause the brakes to overheat. Either method can result in loss of brake effectiveness or even brake failure.

Night Driving:

- Be well rested and alert. If necessary, find a safe to stop and rest until ready to continue.
- Avoid using interior lights that create a glare on the windshield and decrease visibility.
- Dim dash lights to a comfortable level to reduce glare.

Extreme Heat/Hot Weather Conditions:

- Frequently observe all gauges. Variations from normal conditions should be promptly evaluated.
- Check tire pressure before traveling in hot conditions. Tire air pressure increases with heat. Do not let air out of a hot tire. When the tires cool down they will return to the correct/previous tire pressure.
- Pay extra attention to hoses and belts that are more susceptible to fatigue in extreme heat.

Winter and Cold Climate:

- The motorhome should be prepared for cold weather use.
- Keep speeds slow and steady. Make moves gradually and look further ahead to increase reaction distance.
- During cold weather tire air pressure can decrease. Check tires and ensure tires are at proper inflation pressure.
- If road or weather conditions are treacherous, find a safe place to stop until conditions improve.
- Avoid downshifting or using the engine brake on wet or slippery surfaces that can cause the drive wheels to skid.
- Wiper blades should be in good condition. Fill the washer reservoir with antifreeze formula window washer fluid.
- Use mirror heat to keep mirrors clear.
- Remove any ice build-up from the entry step to avoid accidental slipping.

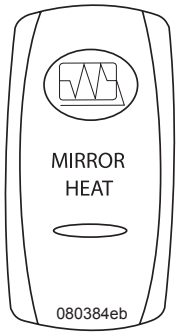

Wet Conditions:

- Worn or improperly inflated tires can increase risk of hydroplaning.
- Heavy rain or deep standing water can cause brakes to apply unevenly or grab.

Refueling:

- Truck stops are good refueling points.
- Check overhead clearance before pulling into the fuel island.
- Be aware of concrete/steel posts installed around fuel islands.

- Avoid running over the fuel hose as it can get hung up on the motorhome and cause body damage.
- Use of gloves is recommended for refueling. Store gloves in the outside compartment.
- To prevent grease and fuel deposits from being tracked into the motorhome when refueling, change shoes before entering. Store the extra pair of shoes near the entry door.

WARNING:
Propane and gasoline are highly flammable and can ignite, resulting in explosion, fire or death. Ensure all flames are extinguished and all propane appliances are turned off and the primary propane shut-off valve is turned off prior to refueling.

Fuel Economy:

Driving style, wind resistance, terrain, vehicle weight, and engine-driven accessories are some of the factors that affect fuel economy.

Guidelines to Help Increase Fuel Efficiency:

- When starting out, apply the throttle lightly and accelerate gradually. Avoid excess throttle and accelerating quickly.
- Check the tire pressure. A low tire is not only a safety hazard but also increases rolling resistance and fuel consumption. Keep the engine at a low to mid operating range of 1100 to 1500 RPM, which requires less fuel than operating at higher RPM.
- Avoid using full throttle when ascending a long hill. This wastes fuel and increases engine operating temperature from incomplete combustion. Manually shift to a lower gear and use less throttle. Fuel will burn more efficiently.
- Avoid extended idling to warm-up the engine. Start the engine and wait for normal oil pressure to register. Engage the high idle feature until the engine coolant temperature gauge rises. The engine is now ready for travel. Whenever coolant temperature is below operating temperature (idling engine) incomplete combustion occurs, causing carbon build-up and raw fuel to wash lubricating oil from the cylinder walls and dilute the crankcase oil.
- Excessive idling (more than 10 or 15 minutes) can potentially damage the emission system.
- Operate the transmission with the Mode function set to Economy whenever possible; this allows for earlier shifts and enhanced fuel economy. Shift points are also lower if the cruise power switch is on. Turn off the cruise power and set the transmission to normal mode when in mountainous terrain and congested traffic.
- Follow the maintenance schedule for the engine.

TRIP PREPARATION

The following suggestions are general guidelines to follow when preparing for a trip:

Items to Carry:

- An emergency road kit containing a flashlight, road flares, warning signs and a fire extinguisher.

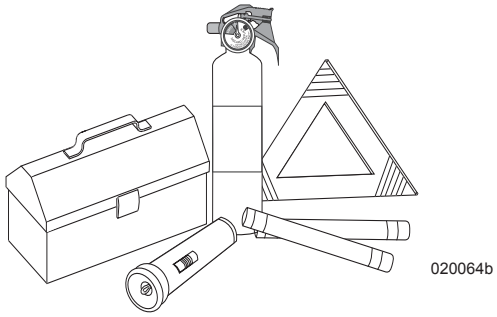

Tool Box & Emergency Road Supplies

- Local, State and National Maps, as well as a 'Motor Carrier' road atlas (for refueling station and truck repair facility locations).
- Hand tools, a 12 Volt DC test light, a 120 Volt AC polarity tester, battery hydrometer, an assortment of blade fuses, mini-fuses and alternator belt.
- Potable and non-potable water hoses, a water pressure regulator and various termination connectors for sewage.

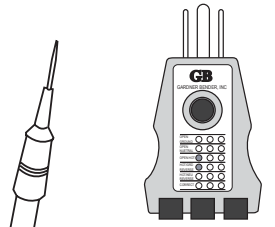

Polarity Tester

Test Light

Inspection:

- Ensure all exterior items are stowed or secured (i.e. TV antenna, ceiling vents and windows).
- Check belts, hoses, battery and engine fluid levels. Inspect the engine, transmission and generator per the OEM manuals.
- Evenly distribute and secure cargo. Store heavy items near the rear axle and lighter items toward the front to prevent uneven stress and abnormal handling.
- Check all tires for accurate inflation pressure and physical condition. Look around, above and under the motorhome for obstruction or leaks. Test all exterior lighting: headlamps, taillights, brake and clearance lights.
- Inside the motorhome, store and secure heavier objects in the lower cabinets to maintain a low center of gravity for sway reduction.
- Secure loose items to prevent weight shifts.
- Store lighter items in the overhead cabinets.
- Close and secure all cabinet doors and drawers, shower and pocket doors.
- Turn off interior lighting.
- Adjust exterior mirrors and check dash gauges for proper operation.

INFORMATION:
For chassis maintenance details refer to Chassis section 10.

CAUTION:
Open the bay doors slowly. Cargo may shift during travel.

WARNING:
To avoid injury, never place hands or fingers near the edges of the bay door when opening or closing. Always use the latch handle. Apply pressure with the other hand just above the latch handle.

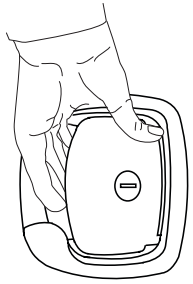
020134i

TIPS:
Multi-purpose items, versatile clothing and periodic removal of unused cargo will streamline cargo storage.

HITCH
Using the Rear Receiver

When using the rear hitch receiver, remember that the motorhome is intended for towing light loads and is primarily designed as a recreational vehicle. Safety and durability of the hitch receiver requires proper use. Avoid excessive towing loads or other misuse of the receiver. Towing will affect fuel economy.

Weight pushing down on the rear hitch (tongue weight) must not exceed 10% of maximum tow capacity. It is recommended to weigh the motorhome when fully loaded to ensure proper weight distribution of the GCVW (Gross Combined Vehicle Weight).

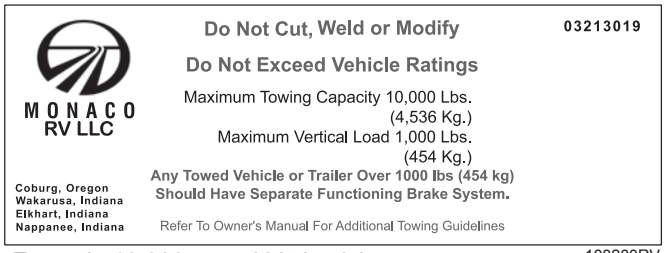

Example 10,000 pound hitch sticker
100200RV

When weighing the motorhome, include all passenger weight. The motorhome fully loaded, including fresh water, propane and any vehicle or trailer towed, must not exceed the GCWR (Gross Combination Weight Rating).

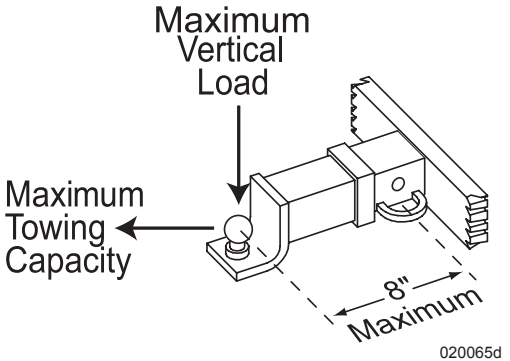

020065d

WARNING:
Most states and Canadian provinces require trailers and/or towed vehicles to have adequate auxiliary brakes. Failure to comply with these State and Canadian province requirements may result in fines and/or pose a safety hazard, which may result in an accident.

WARNING:
Do not tow a trailer or vehicle that exceeds the rated capacity of the hitch receiver. Overloading the hitch receiver can cause unusual handling characteristics and overstress the hitch receiver and chassis. It could also void the warranty. If there are any questions, call customer support.

Ball Mount:

Ball mounts come in various configurations and weight limitations. There are three things to consider when selecting a ball mount: weight rating, pin to ball center length and rise/drop. The weight rating of the ball mount, tongue weight and tow weight must meet or exceed the total load weight.

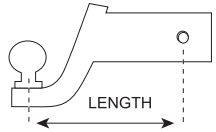

Distance from the center of the hitch ball hole to the center of the pin hole.

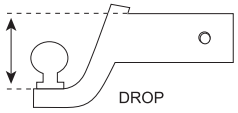

Distance from the shank to the top of the hitch ball platform.

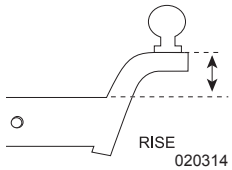

Distance from the top of the shank to the top of the hitch ball platform.

Pin to ball center should not exceed 8". Ball mounts of longer length will significantly reduce the weight rating of the hitch receiver. Observe weight reduction percentages that may be listed on ball mounts longer than 8". Selecting how much rise or drop a ball mount will need is relative to hitch receiver height and height of the towed load with respect to the type of towing equipment between the motorhome and towed load.

Weight Distributing Hitches:

A weight distributing hitch uses spring bars of spring steel to compensate for lack of adequate rear suspension of the tow vehicle. This type of hitch is generally used for towing heavier loads as tongue weight and gross tow weight increases. The spring bars attach to the hitch head assembly and the trailer frame.

Hitch Ball:

The hitch ball is what the trailer attaches to. A hitch ball is available in three common diameters, 1-7/8", 2" and 2-5/16". The larger the diameter of the hitch ball, the higher the weight rating. The diameter of the hitch ball shank also factors into weight rating. Match shank diameter with the hole in the ball mount or weight distributing head. Shank clearance should not exceed 1/16". There should be at least two additional threads extending past the nut when the hitch ball is secure.

Safety Chains:

Safety chains are required by law when towing any load. The chains and any fasteners used to attach the chains to the hitch receiver must be rated for the load being towed. Attach chains so they crisscross under the towing equipment. Allow just enough slack in the chains to make sharp corners. Too much slack will allow the chains to drag on the road surface. If the towed load should become uncoupled from the hitch ball, the towing equipment will be cradled by the safety chains. If the towed load does uncouple, do not attempt to make a sudden stop and exacerbate the situation. Apply the brakes with gentle, steady pressure. Pull over to the side of road at a safe location.

Tow Capacity and Class Ratings:

Several components may comprise a tow hitch system. The weight rating of individual components that are part of the towing system must be greater than the gross weight of the load being towed.

Components are classified into weight groups to help define weight capacity of towing equipment. Maximum tow capacity is limited to the component with the lowest weight rating in the tow hitch system. Example: a ball mount may have a weight rating of 5,000 lbs., but the hitch ball is rated 3,500 lbs. Maximum tow capacity is reduced to 3,500 lbs. Many times a component will have a Class weight rating. These groups are shown in chart:

WARNING:

Be sure the weight ratings of the ball mount, tow ball and safety chains are equal to or greater than the load. Use of an extension to the receiver or extended ball mount will significantly reduce hitch receiver weight ratings. Modifications to the hitch receiver, or use of the hitch receiver other than intended, can void the warranty of the hitch receiver, chassis or both.

	CLASS I	CLASS II	CLASS III	CLASS IV	CLASS V
Weight Carrying Hitch	TW - Up to 200 lbs.	WC TW - Up to 350 lbs.	TW - Up to 500 lbs.	TW - Up to 750 lbs.	TW - Up to 1,200 lbs.
	GTW - Up to 2,000 lbs.	WC GTW - Up to 3,500 lbs.	GTW - Up to 5,000 lbs.	GTW - Up to 7,500 lbs.	GTW - Up to 12,000 lbs.
Weight Distributing Hitch	---	---	---	TW - Up to 1,200 lbs.	TW - Up to 1,400 lbs.
	---	---	---	GTW - Up to 12,000 lbs.	GTW - Up to 14,000 lbs.

- **GTW** = Gross Trailer Weight. Weight of trailer fully loaded.
- **TW** = Tongue Weight. Weight pushing down on Tow Ball.
- **WC** = Weight Carrying. Weight carrying capacity of the Ball Mount.
- **WD** = Weight Distributing. Weight carrying capacity of a weight distributing hitch.

Calculating Tow Capacity:

Several variables must be reviewed and calculated to properly determine towing capacity. Limiting factors include GCWR (Gross Combination Weight Rating), GAWR (Gross Axle Weight Rating), hitch receiver weight rating and the weight rating of each piece of towing equipment. One or some of these variables will limit tow capacity.

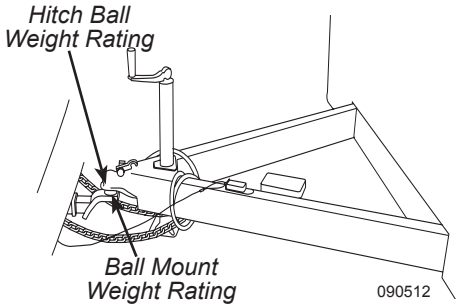

Example: The motorhome has a GCWR of 35,000 lbs. The motorhome in a fully loaded, ready for travel condition, weighs 29,500 lbs. The hitch receiver is rated at 700 lbs. tongue, 7000 lbs. tow. The load being towed weighs 4,200 lbs. with a tongue weight of 400 lbs. However, the hitch ball is rated at 3,500 lbs. In this case tow capacity is limited to 3,500 lbs. due to the rating of the hitch ball, even though the rest of the towing equipment, hitch receiver and vehicle GCWR are within specifications.

It is possible to be within the GCWR but exceed the GAWR. When tongue weight is applied, mechanical advantage increases with distance (lever) from the hitch ball to the drive axle. The drive axle now becomes a pivot point (fulcrum).

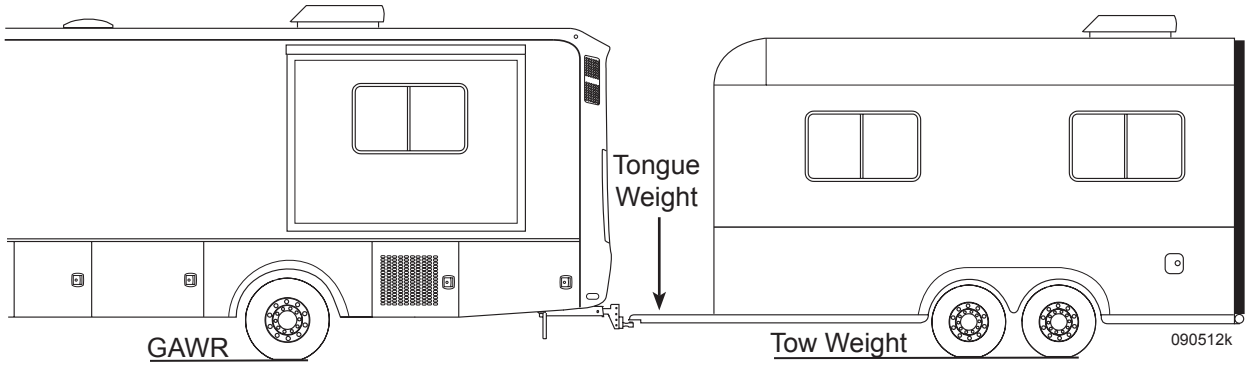

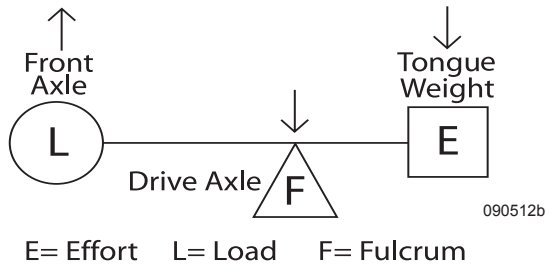

As tongue weight increases (effort), weight on the drive axle also increases (fulcrum) while weight on the front axle decreases (load) as weight is displaced from the front axle.

It may be necessary to weigh both the tow vehicle and towed load as an assembly to ensure the GAWR has not been exceeded.

It is also possible to be within the rating of the hitch receiver and yet exceed the GCWR.

Due to changes in weight, the motorhome must be weighed in a loaded, ready for travel condition that includes passengers, cargo and liquids. Subtract the weight of the motorhome in a loaded, ready to travel condition from the GCWR to determine tow capacity. Whether towing a vehicle or trailer, the load being towed must be weighed to ensure the towed weight, when added to the tow vehicle, will not exceed the GCWR and the weight ratings of each tow system component are equal to or greater than the load being towed.

WARNING:

The motorhome and towed load must be weighed after they are loaded for travel to determine if actual weights are within towing specification. Each component of the towing system must be rated equal to or greater than the load being towed. Do not exceed the Gross Combination Weight Rating.

Taillight Configuration:

Taillights come in a 2-wire or 3-wire configuration. A 2-wire configuration has all red lens. A 3-wire configuration usually has red and amber lens. Amber is used for turn signals only and red for taillight and brake light. These systems are electrically different. Whenever hooking a 2-wire system to a 3-wire system, or vice versa, a converter box must be installed for correct taillight function. A taillight converter is available from auto and RV supply stores. Do not attempt to wire a tow plug connector if unfamiliar with these systems. A trained technician will install the proper converter so the taillights and turn signals work correctly on the motorhome and towed vehicle or trailer when the tow plug connection is made.

Towing Weight Checklist				
Towed Load	(Tongue Weight) _____	(Overall) _____	Yes	No
Towing Equipment	(Ball Mount) _____	(Hitch Ball) _____	Yes	No
Hitch Receiver	(Tongue) _____	(Tow) _____	Yes	No
GAWR	(Rated) _____	(After Hitching) _____	Yes	No
GCWR	(Rated) _____	(After Hitching) _____	Yes	No

Insert Weight Ratings: Check Yes or No if within specifications.

Tow Plug Connection

The motorhome is pre-wired from the factory with an electrical connection for towing. The connection is located near or on the hitch receiver. Convoluted tubing protects the tow harness wires. Current draw should not exceed 10 Amps for each designated light circuit. Within the electrical connection is a positive terminal for use when towing a trailer equipped with a battery. The positive terminal maintains the charge of the trailer battery.

When preparing a tow plug connection, strip the wires 3/8". Twist the wire strands and place under the clip and secure the screw. Make sure there are no loose strands of wire that could short against the case or other terminals. Be careful to not accidentally mirror image wire locations when making the trailer connection.

To Tow a Car or Trailer:

- Connect a tow car or trailer to the motorhome with safety chains rated for the weight being towed.
- Make the electrical connection and perform a light check before starting a trip and at each rest stop.
- Check the tires frequently. Flat tires on a towed vehicle cannot be detected from the motorhome while driving. A flat tire is a safety hazard and will cause extensive damage.

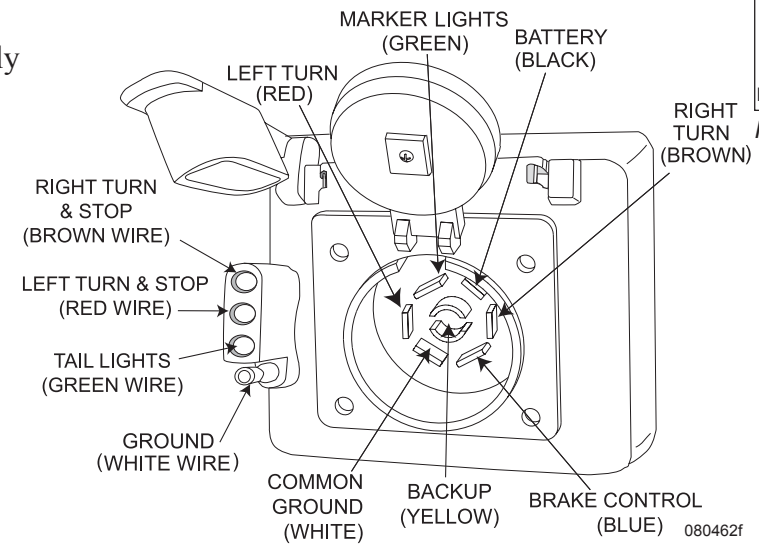

REAR VISION SYSTEM

The motorhome is equipped with a rear vision camera and two side vision cameras located in the side mirrors. The system may be used while driving in forward, reverse and when parked.

The rear vision camera is designed to provide the driver with a view of the rear when backing up. The monitor will automatically display the corresponding side camera when the turn signal is activated. The monitor will default to the rear vision camera (when camera is selected from the menu) when the turn signal is cancelled. The system must be powered on for use.

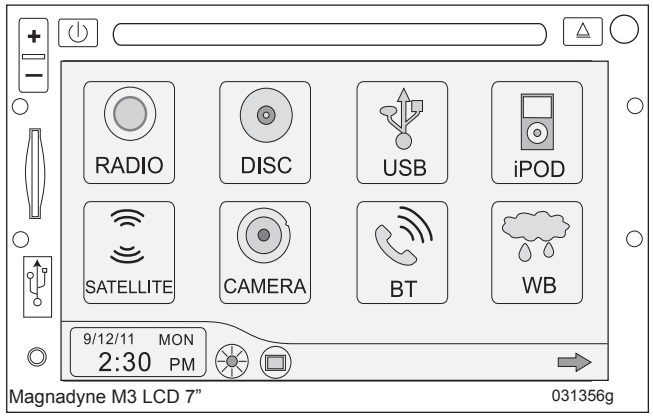

Rear view system

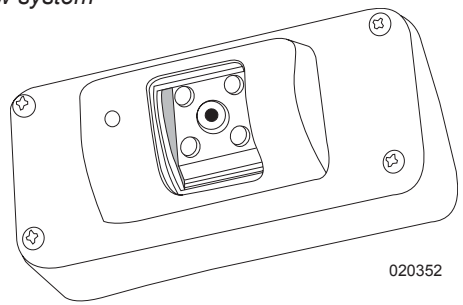

Rear Camera

INFORMATION:
Refer to the OEM for detailed operating instructions.

Precautions:
- Do not expose the monitor to excessive heat or cold.
- The monitor is not waterproof.
- Do not use the monitor where excessive dust or smoke exist.
- Do not use abrasive cleaning materials on monitor.
- Do not strike or drop objects on the monitor.

NOTE:
Refer to Section 5 Dash Radio for other system features.

To Use the System When Driving:
- Turn on the ignition.
- Turn on the monitor.
- Press the Camera menu from the touch-screen display.

NOTE:
The rear vision system will automatically activate when the transmission is placed in reverse.

To Use the System When Parked:
- Turn on the Radio switch.
- Turn on the monitor.
- Press the Camera menu from the touch-screen display.

Features:
- Remote Control Sensor: The remote control must be pointed at the infrared sensor for the system to operate.
- Power On/Off: The ignition or radio switch must be on to operate the monitor. The Power button on the monitor turns the system on or off. Momentarily press to turn the system on. Press and hold to turn off.
- Bright: Press the Bright icon.

NOTE:
A corresponding side camera will automatically display when the turn signal is activated.

BACKING UP A MOTORHOME

Whether a long time owner of recreational vehicles or just starting out, backing up can be a challenge. Following some simple guidelines may help to reduce that challenge. When backing up, the driver (pilot) should be comfortable using the mirrors, the back-up camera and the co-pilot's directions (ground guide) for assistance.

Practice backing up with the co-pilot's guidance in a large unobstructed parking lot. Backing up is a team effort. The backing process should begin while the motorhome is in forward motion. Maneuver the motorhome to align with the chosen site. Aligning the motorhome with the site after the backing process begins may require more than one attempt. When the motorhome is properly aligned with the site, the parking area will be visible in both mirrors. Use road markings as reference points when possible.

When pull-through sites are not available, pick a solid, level site on the left side for a better field of vision using the roadside mirror. If the site is on the right, use the curbside mirror for backing up, but stay aware of blind spots. Get out and walk the area prior to backing in. Look for potential hazards or obstacles that may damage the motorhome. If the site is satisfactory, prepare to back in carefully. Have the co-pilot provide guidance using the five hand signals. Use of walkie-talkies will also aid in guidance.

The co-pilot will perform just as important a job as the driver. When guiding the driver, the co-pilot should be located safely at the left rear corner of the motorhome, facing forward, while remaining visible in the roadside mirror at all times. The co-pilot should make a conscious effort to maintain sight of the driver through the roadside mirror as the motorhome maneuvers. If the driver loses sight of the co-pilot, stop the backing up process until the co-pilot returns to view. To avoid mishaps, the co-pilot should be focused only on what the driver is doing, with brief observation moments.

If necessary, stop the backing up process to have co-pilot **inspect** other areas or angles of concern. The driver should receive directions only from the co-pilot. When the co-pilot is guiding the driver, five clearly defined signals should be used, with only one signal given at a time. Flailing arms with indecisive signals confuse the driver. Signals should be given with purpose and confidence. Directional signals are directing travel of the rear of the motorhome.

If the desired direction is left, the co-pilot points left. **For example:** The co-pilot will use his/her right arm and forefinger pointing distinctly left with arm and finger held on a horizontal plane, indicating desired direction of travel of the rear of the motorhome. The directional signal given should remain steady until the desired movement is complete.

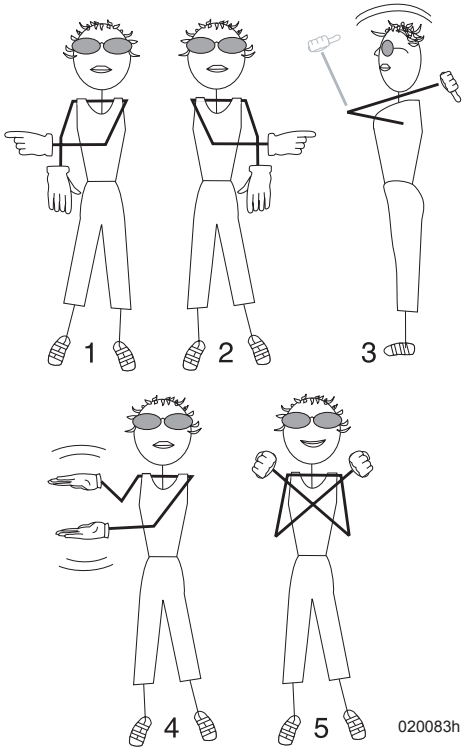

Five Directional Signals:

1. Co-pilot uses left hand and arm held horizontal, with forefinger pointing right, to direct rear of motorhome to the right.
2. Co-pilot uses right hand and arm held horizontal, with forefinger pointing left, to direct rear of motorhome to the left.
3. Co-pilot uses both arms and hands parallel with thumbs pointing up and to rear in a waving vertical motion. This signals driver to maintain a straight back direction.
4. Co-pilot holds arms horizontally, hands open with palms facing one another. Start with a wide separation, gradually closing distance of hands in a rate appropriate to vehicle speed to indicate amount of distance to the stop point.
5. Closed fists and crossed arms indicate **STOP**.

Backing Up Trailers:

Towed vehicles using a tow bar or tow dolly have more than one pivot point and are not suitable for backing. Attempting to back up the motorhome while connected to a tow bar or tow dolly can jack-knife the towing device. Damage to towing device, tow car and motorhome can occur. If necessary, disconnect the tow vehicle to avoid a backing up situation.

Trailers have one pivot point and may be backed up. The same rules for backing a motorhome can be applied to backing a trailer.

When preparing to back the trailer into a space, maneuver the motorhome sweeping wide. Turn back to the opposite direction to maneuver the trailer into the space. Turn the bottom of the steering wheel in the desired direction of travel for the trailer.
For example: If the desired direction of the trailer is left, rotate the bottom of the steering wheel left. If the trailer moves in an undesired direction, pull forward just far enough to re-align the trailer with the space. The co-pilot should stand safely at the left rear corner of the trailer within view of the driver in the roadside mirror, using the five hand signals for guidance.

CAUTION:
Tow bars or car dollies are generally made to travel in a forward direction only. Most towing equipment of this type is not designed for backing. Never attempt short back up distances with a tow bar or tow dolly. Damage to the motorhome, vehicle or towing device will result.

SET-UP PROCEDURES

If the site for the motorhome provides full hook-ups, use this quick reference as a guide only. This information is an overview on hooking up the utilities and preparing appliances for use. Specific information on slide room, awning, leveling system, water system, entertainment and propane operations is discussed in detail in other sections.

1. Level the Motorhome:

- Follow procedures and guidelines for extending the slideout rooms in section 5 ***"Slideout Operation"*** then **"*Leveling the Motorhome*"** in Section 10.

2. Hook up utilities and prepare appliances for use:

- Open the primary propane valve on the propane tank.
- Prepare the shore cord for connection. Uncoil and inspect the cord. Install proper electrical adapters if 50 Amp service is not available. Operate electrical appliances in sequence when hooked to limited shore power service. Turn the shore power circuit breaker OFF prior to plugging in the shore cord.
- If hooked to less than 50 Amp service, operate appliances in sequence rather than at the same time to avoid shore power overload. Start the water heater and furnace (if needed).

NOTE:
If shore power is less than what is rated for the motorhome (50 Amp), electrical adapters will be required and power consumption must be reduced to avoid tripping the shore power breaker.

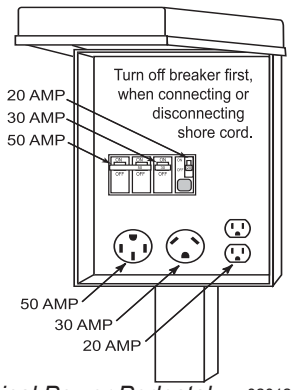

Typical Power Pedestal 020125

CAUTION:
Do not remove cover from the shore power supply to troubleshoot electricity to the motorhome. Serious personal injury or death may occur. If there is no power to the motorhome, inform the park manager. It is the park manager's responsibility to fix any problems with the power pedestal at the site.

CAUTION:
If shore power service is limited to 15 or 20 Amps, use of light duty extension cords and electrical adapters will create a voltage loss through the cord and at each electrical connection. Line voltage loss and the resistance at each electrical connection can be a hazardous combination. Damage to sensitive electronic equipment may result.

NOTE:
To avoid shore power overload when hooked to 30 Amp service, determine appliance current load prior to turning on appliances or using interior outlets.

- If cable service is provided, hook up a 75 Ohm RG59 or RG6 cable to the cable connection in the roadside rear compartment.
- A phone connection port is provided in the water service compartment. Phone utility outlets are placed throughout the motorhome, including a phone line to be attached to a satellite receiver for Pay-Per-View movies and events.

- Connect the potable water hose to the city water connection in the water service center.
- Hook-up the sewer hose. Sewer drain pipe diameters are generally either three or four inches. Proper sewer hose adapters will ensure against leaks or spillage. With the sewer hose properly connected open the grey water valve (liquid waste drain). The black water valve (solid waste drain) remains closed until the tank is full or until time of departure.

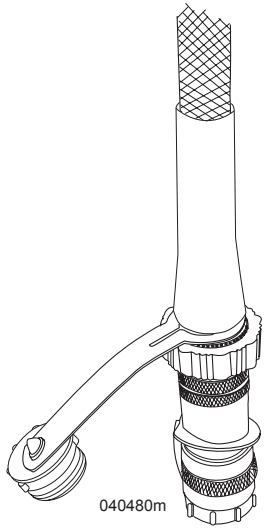

DRY CAMPING

The resources and equipment on the motorhome are designed to function without being connected to outside sources of fresh water, sewer or electricity. Conservation of resources when dry camping is essential for extended stays. Planning, preparation and change of habits is required to make onboard resources last and will make the stay more enjoyable.

Before arriving at the site, ensure batteries are fully charged and properly maintained (**See Section 8 in Batteries - House under "*Battery Maintenance*"**), the fresh water tank and water heater are full and waste holding tanks are empty.

To conserve water and fuel:

- Operate the refrigerator on propane (if applicable). Plan what is needed from the refrigerator prior to opening. Conserve propane by cooking over a campfire.
- Turn the Aqua Hot on about twenty minutes prior to use. Once heated, water will remain hot for several hours. Turn the Aqua Hot off when not in use.
- Set the thermostat temperature slightly lower than desired to prevent frequent cycling of the heating system.
- Know tank capacities and routinely check fuel levels, especially during cold weather.
- Use ventilation fans or open windows to reduce use of the roof air conditioner.
- Frequently monitor water consumption. Limit shower usage; turn water off when soaping down and back on to rinse. When water conservation is critical, take a sponge bath or use campground shower facilities if available. Do not fill the sink with water to wash only a few dishes. Use disposable dishes when possible.
- Evacuate waste holding tanks prior to filling fresh water tank.

To conserve battery power:

- Do not allow batteries to fully discharge before operating the generator. If possible, run the generator twice a day, morning and afternoon, to charge the batteries.
- Turn off the inverter when not in use.
- Turn off interior 12 Volt DC power whenever possible. Refrigerator, battery charging and inverter operation is not affected. Turn off small battery operated items i.e., porch, bay exterior step, generator and engine compartment lights, etc. Turn off the antenna boost when not watching TV. One light left on can quickly reduce battery reserves.

Typical Current Draw	
Battery Cutoff	1.5 Amps
13" TV	1.7 Amps
Rope Light (10 ft.)	1.3 Amps
Porch Light	2.0 Amps
Fluorescent Bulb (1)	2.1 Amps
Halogen Ceiling Light (1)	.09 Amps

- Keep a working flashlight handy for night trips through the campsite and inside motorhome. When interior lighting is desired, use one light in a central location such as the vanity. Disconnect all but one or two bulbs.
- Turn on the water pump only when using water.
- If weather does not permit or no outdoor table is available, eat at the dinette table by candlelight.
- Operate the generator when using convection microwave oven.

BREAKING CAMP

Preparing the motorhome for travel will require several small tasks. Properly securing and storing items will help to prevent them from getting lost or damaged.

Outside Checklist:

- Disconnect the cable TV.
- Disconnect and stow the telephone line.
- Retract awnings and secure them for travel.
- Close the primary propane shut-off valve.
- Connect the sewer hose.
- Drain and flush holding tanks. Start by closing the grey water valve. Run enough cold water down sink and shower drains to fill the grey tank at least 50%. Use caution to avoid overfilling or flooding the grey tank. Open the black tank valve and allow adequate time for black tank to drain. If applicable, connect a non-potable water hose to the “Tank Flush” connection and flush the black tank system. Close black tank valve and open grey water valve. Water from the grey tank will help to flush the drain hose. Once evacuated, close grey water valve. Disconnect the sewer hose and flush with clean water from a non-potable hose. Store the hose. Replace the sewer cap.

Screw the ends of the hose together to prevent leakage and contaminants from entering the hose.

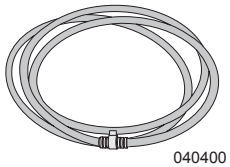

040400

- Fill the fresh water tank then disconnect fresh water hose from the source. If applicable, remove the water pressure regulator from the city water faucet and store.
- Turn shore power breaker off and disconnect shore line. Wind up and store shore cord. Secure door.
- Check all tire pressures.
- Inspect tires and wheels.
- Secure all compartment doors.
- Check for fluid leaks under and around the motorhome.

Engine Checklist:

- Inspect the engine, transmission and the engine compartment for fluid leaks.
- Inspect the area under the motorhome for fluid leaks or puddles.
- Check all fluid levels: oil, antifreeze, transmission, hydraulic fluid and washer fluid.
- Inspect belts and hoses for wear.
- Inspect wiring for loose, frayed or corroded connections.
- Start engine and listen for unusual noise.
- Inspect gauges and controls for proper operation.

Interior Checklist:

- Retract leveling jacks (if applicable).
- Start the engine to allow the air suspension to obtain proper ride height.
- Ensure park brake is set.
- Clear the slide room path.
- Clean the floor and move the driver and passenger seats forward.
- Retract the slideout room.

CAUTION:
Do not operate the slideout room with the air suspension (air springs) deflated or when supported by hydraulic jacks. Damage to the slideout room, mechanism or seals can occur. Refer to Section 5 "*Slideout Operation*" before activating slideout rooms.

- Secure and fasten all interior doors. Lock the shower door.
- Close roof vents and windows.
- Secure all loose, heavy or sharp objects in case of a sudden stop.
- Close all cabinet doors and drawers.
- Turn off interior lights.
- Turn off the water pump.
- Check fuel level and all other gauges for operation and correct level indications.

Departure Checklist:

- Check items in storage bays to ensure shifting or damage of items will not occur.
- Look around, above and under the motorhome for obstructions. Check for debris stuck between the rear dual tires.
- Outside compartment doors should be closed and locked.
- Check operation of all exterior lights, headlamp, taillamp, brake and clearance lights.
- Secure all awning and travel locks.
- Ensure jack pad is clear of debris when retracting hydraulic jacks. Loose rocks, gravel and debris can be thrown from the jack pad and can possibly damage the tow car.

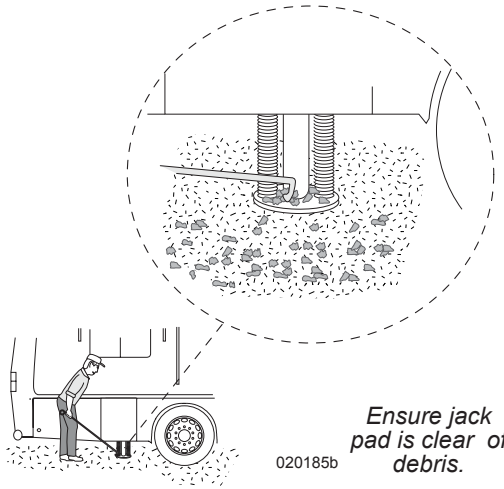

020185b

Ensure jack pad is clear of debris.

- Secure and lock the entry door for travel.
- Pull forward out of the campsite. Inspect site for overlooked items.

EMERGENCY ROADSIDE PROCEDURES

If an emergency situation occurs, use the appropriate braking technique and pull off the roadway a safe distance from traffic (if possible). Set the parking brake and turn on the hazard warning flashers, especially when parked alongside traffic lanes. In the event of an emergency stop due to a mechanical breakdown or other motorhome related problems, contact customer support or an emergency service provider.

Road flares or reflective warning signs should be displayed if the motorhome is on the side of the road for any length of time. Guidelines for placing warning triangles depend upon the road characteristics and visibility. For example: The standard placement is 10, 100 and 200 ft. from the rear of the motorhome when on a divided highway or one-way road. On a two-way road, with traffic traveling both directions, the same placement is required at the front of the motorhome. Roads with curves and hills may require the placement of the last/furthest triangle to be 500 ft. behind the motorhome in order to safely warn approaching traffic.

In Case of Flat Tire


070175

In the event of a flat tire, it is recommended to call for roadside assistance. The size and weight of the motorhome and its tires require proper equipment to change the tire. A professional service technician will have the equipment and training needed to repair or replace the tire. In the case of sudden tire failure, avoid heavy braking. Hold the steering wheel firmly and gradually decrease speed. Slowly move to a safe off-road place which should be a firm level spot. Turn the ignition off and turn the hazard flashers on. Save the old tire for possible warranty coverage.

WARNING:
DO NOT crawl under the motorhome for any reason if a wheel has been removed. Any number of circumstances could cause the motorhome to suddenly fall, resulting in severe injury or death.

EMERGENCY SERVICE PROVIDER		
Equipment	**Provider**	**Emergency Number**
Motorhome	Monaco Customer Support	1-877-466-6226
Chassis	Roadmaster	1-877-466-6226
Engine International	Customer Assistance Center	1-800-448-7825
Transmission	Allison Transmission	1-800-524-2303
Towing	Owner's Advantage Program	1-877-211-8135
Tires	Goodyear	1-877-484-7376

Dead Chassis Battery

A discharged battery will not supply the amount of amperage necessary to crank and start the engine. If the engine fails to crank, or cranks slowly due to a discharged chassis battery, the Battery Boost switch will allow a temporary connection of the house battery to the chassis battery to increase amperage.

Battery Boost Switch:

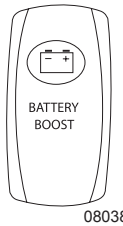

080384f

Located on Driver Console

The Battery Boost switch engages a heavy-duty solenoid to electrically connect the house batteries to the engine battery in the event the engine will not crank or cranks slowly. The solenoid is designed for short-term high-current intermittent use. Engaging the boost solenoid for an extended period will damage the solenoid.

Jump Starting Using Battery Boost Switch:

- With ignition key Off, press and hold the Battery Boost switch for ten seconds. After ten seconds, continue to hold the switch and attempt to crank the engine.
- If the engine fails to crank or does not crank fast enough, discontinue the attempt. Continued attempts will only diminish any remaining surface charge in the chassis battery and end future alternative attempts.
- Next, start the generator. This may require using the battery boost switch. Once the generator is operating, the electrical combination of the generator and the inverter will charge the batteries.

- Allow the generator to run approximately ½ hour before attempting to crank the engine.
- Press the Battery Boost switch and attempt to crank the engine.
- If the engine fails to crank, or does not crank fast enough to start the engine, the chassis battery may be depleted and the motorhome will require a jump start or connect an external charger to the chassis battery.

Jump Starting Using an External Source:

When using jumper cables to start the engine, the cables must connect in a parallel configuration. That is, positive **(+)** to positive and negative battery **(-)** to negative chassis **(-)**. Always connect the positive **(+)** before connecting the negative **(-)**. To prevent arcing when disconnecting the cables; disconnect the negative **(-)** before disconnecting the positive **(+)**.

WARNING:

Always ventilate the battery compartment prior to any work or service to the batteries. Gas emitted by the batteries can explode when exposed to smoking material, flames, sparks or other sources of ignition, resulting in injury or vehicle damage. Batteries contain sulfuric acid that can burn skin, eyes and clothing. Do not connect the end of the second cable to the negative (-) terminal of the battery to be jumped. Connect only to the chassis, away from the battery.

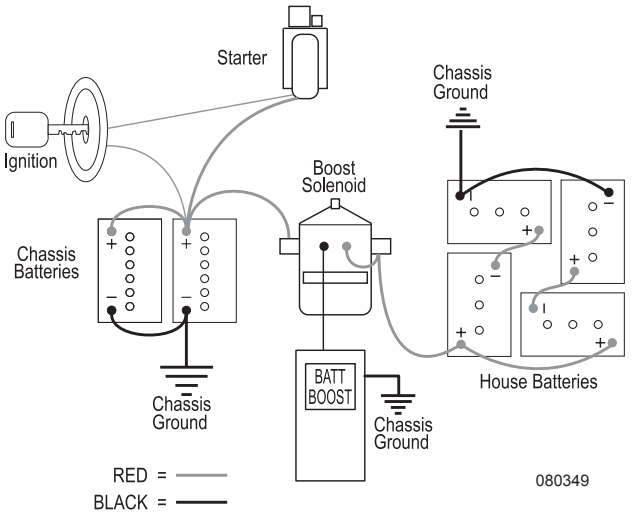

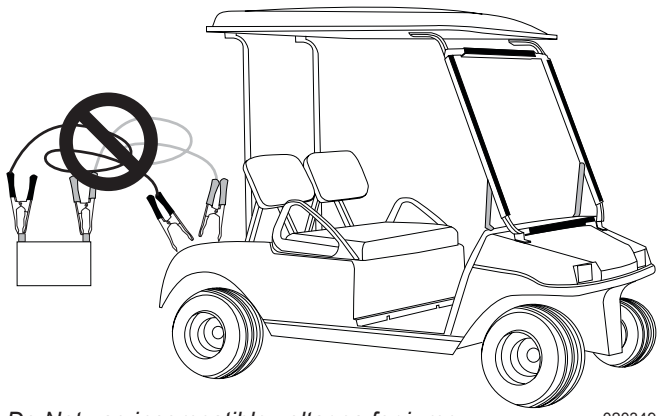

Do Not use incompatible voltages for jump starting

CAUTION:

A large amount of electrical current is required to jump-start an engine. The sizes of the battery, alternator and jumper cables supplying the "jump" are current limiting factors. Wait a sufficient amount of time for a surface charge to build before attempting to start the engine. Voltage fluctuations that occur during a jump-start procedure can damage sensitive electronic equipment and charging systems. If a jump-start is necessary, it is recommended to call Roadside Assistance. They will have the equipment necessary to jump start the motorhome.

CAUTION:

Do not use the towed vehicle for jump starting. The charging system of the towed vehicle does not supply the amperage necessary to jump start the motorhome. Voltage sensitive equipment on the towed vehicle can be damaged and render the towed vehicle disabled.

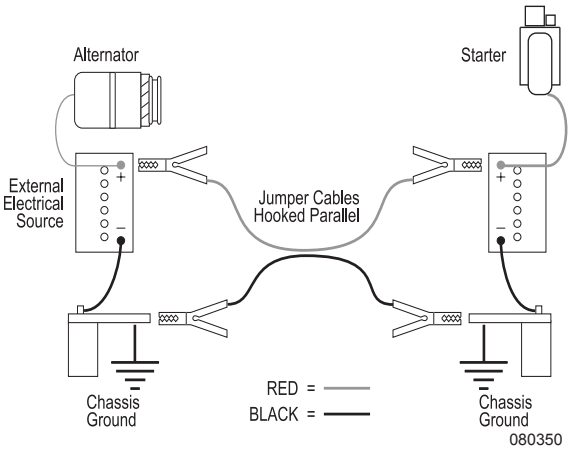

- When using an external electrical source to connect to the chassis battery, turn the chassis and house battery disconnect switches off prior to hooking up the jumper cables.
- Hook up the cables then wait several minutes to allow a surface charge to build in the chassis battery before attempting to start the engine.
- Turn on the chassis and house battery disconnect switches and attempt to start the engine. **Do not** crank the engine more than a few seconds.
- After the engine starts, disconnect the cables. Disconnect the negative **(-)** cables before disconnecting the positive **(+)** cables to prevent arcing.
- If the engine does not crank, or cranks slowly, **DO NOT CONTINUE**. Extensive damage, fire or injury can occur. Obtain help from a qualified technician.

TOWING PROCEDURES

If calling a towing company for service, it is recommended to use a lowboy type of trailer. If a tow truck is used it needs to have a support arm that goes under the motorhome and secures to the front axle. Inform the tow company of the axle weights and total weight of the motorhome.

Other important information is the length of the motorhome, number of passengers and milepost location. Two tow trucks may be necessary to tow the motorhome and to tow a trailer or tow vehicle if it is not operational.

The towing company may need to locate the air nipple to release the air brakes. The air nipple is located in the front generator compartment and should be used by towing personnel only. Generally, if the motorhome ever needs to be towed, use the following instructions.

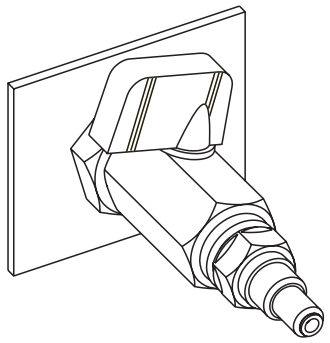

Air nipple located in the generator compartment.

- Secure any loose or protruding parts if the motorhome is damaged.
- Inspect the points of attachment on a disabled motorhome. If attachment points are damaged, select other attachment points at a substantial frame structural member.
- Never allow anyone under a motorhome while it is being lifted by towing equipment unless the disabled motorhome is adequately supported by safety stands.

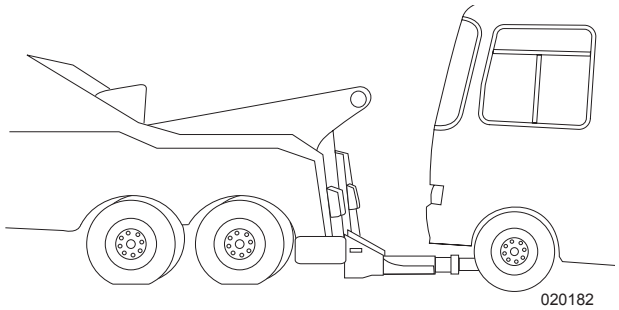

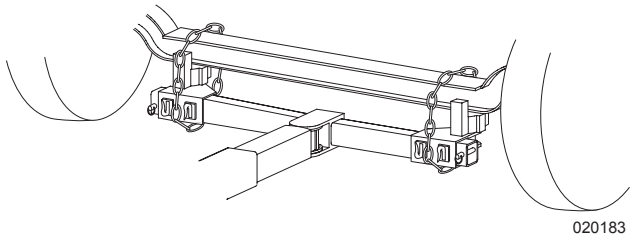

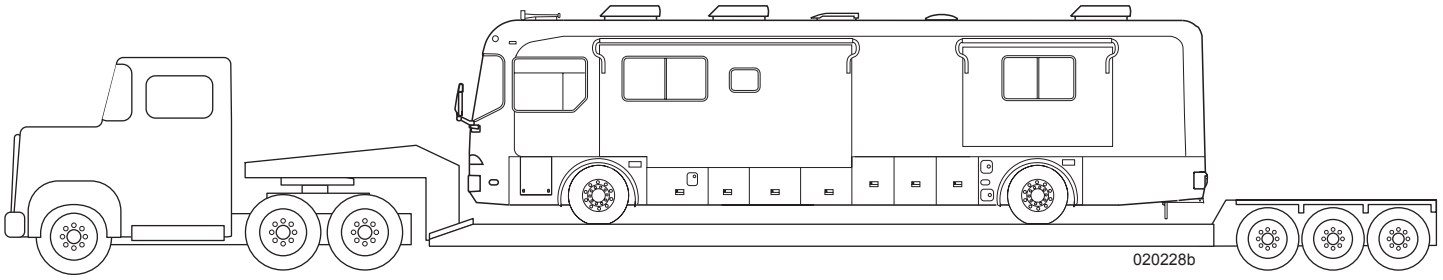

Lowboy trailer

- **Do not** tow the motorhome from the rear. Towing from the rear will severely overload the front tires and suspension, possibly resulting in tire and/or front suspension failure. Rear frame extensions are not designed to support weight loads imposed by lifting the motorhome from the rear.
- If the rear wheels are disabled, place the motorhome on a flat bed trailer, or use a heavy duty dolly under the rear wheels and tow the motorhome from the front.
- The drive shaft must be removed to prevent damage to the transmission. Secure end caps to prevent losing or contaminating the needle bearings.
- The mud flap may need to be removed to prevent damage due to limited ground clearance.

WARNING:
In case the motorhome requires towing, ensure all precautions are followed. The drive shaft must be disconnected and the mud flap may need to be removed. The manufacturer WILL NOT cover damage to the motorhome caused by a towing company.

Disabling Parking Brake

The park/emergency brakes apply to the drive axle only. The brakes can be released manually if the air system will not build sufficient air pressure to release them. This emergency procedure is to be used by trained technicians or towing personnel to move the motorhome to a safe location or repair facility.

WARNING:
Only trained personnel should perform this procedure. Brake chamber spring is under high pressure. Removal of retaining band could result in serious injury or death.

Disabling Brakes:

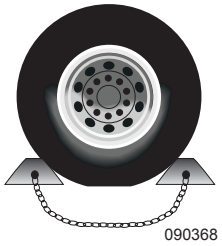

Example of a properly chocked wheel.

- Place wheel chocks firmly against the wheel before performing this procedure.
- Remove the plug from the center of rear brake chamber on the drive axle.
- Remove the caging tool from its holder on the brake chamber and insert the tool into hole. Turn clockwise to engage.
- Screw nut and washer onto caging tool. Use a wrench to tighten the nut, compressing the internal spring to release the brake.
- Repeat procedure for the other side.

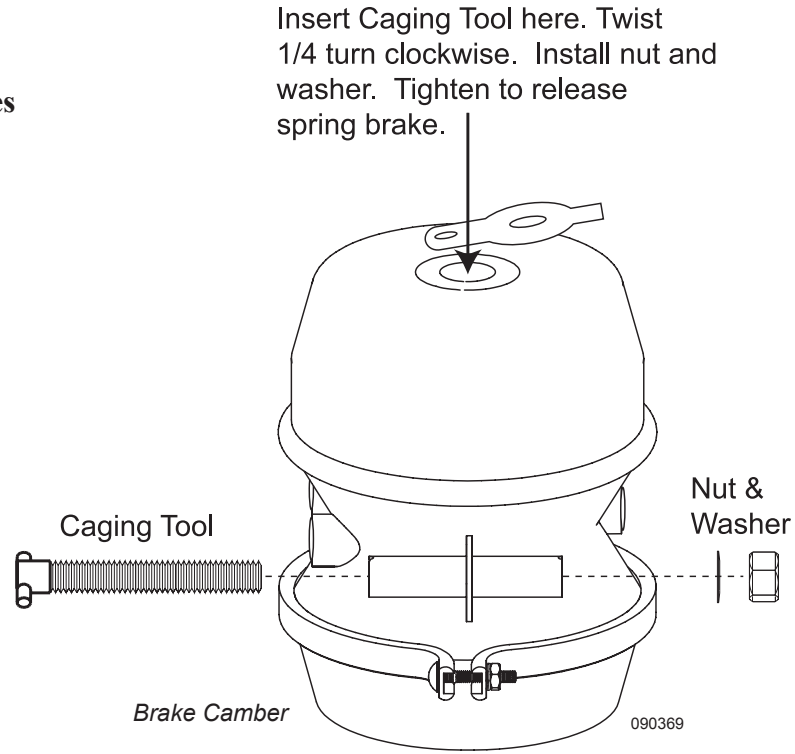

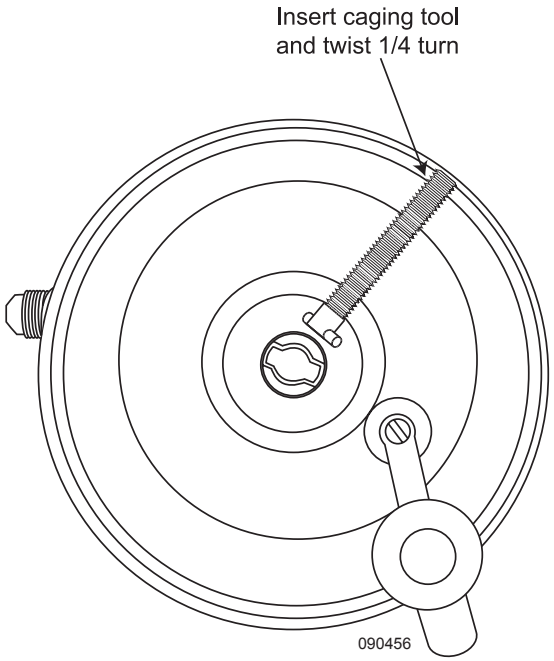

Enabling Brakes:

- After towing, or when air pressure is again available, loosen the nut and remove the tool. Return the caging tool to its original location and replace the plug.
- Repeat for the other side.

WARNING:
Failure to securely chock the wheels can result in the motorhome rolling when the spring brakes are released. Severe injury or death can occur.

TIRES

Maintaining proper tire inflation pressure is important for proper tire load carrying capacity and wear. Improper pressure will lead to abnormal wear and/or sudden tire failure. Weigh the motorhome fully loaded for travel to determine proper tire inflation pressure. If one tire position on the axle is heavier than the other side, inflate both sides according to the heaviest side. This will provide correct tire inflation pressure across the axle while cornering. To obtain the maximum wear and best service from tires, it is helpful to understand their components and functions.

Tire Components:

- **Tread:** Provides traction and cornering grip.
- **Belts:** Stabilize and strengthen the tread.
- **Sidewall:** Protects the side of the tire from road and curb damage.
- **Body Ply:** Provides tire strength and flexibility.
- **Bead:** Assures an air-tight fit with the wheel.
- **Inner Liner:** Keeps air inside the tire.

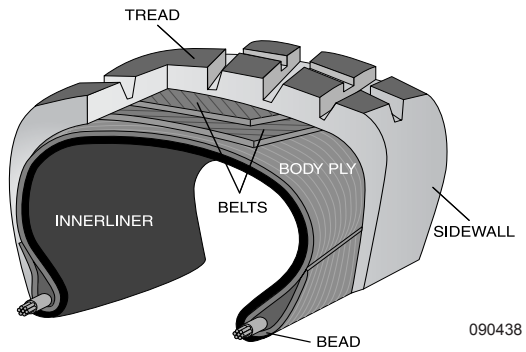

Importance of Air Pressure

The most important factor in maximizing the life of the tires is maintaining proper inflation pressure. Driving with an underinflated or overinflated tire is dangerous and may cause premature wear, tire damage, sudden tire failure that can result in loss of control of the motorhome.

An underinflated tire will cause excessive heat that can exceed design limits of the rubber and radial cords and could result in sudden failure. An underinflated tire will also cause poor motorhome handling, rapid and/or irregular tire wear and an increase in rolling resistance that results in decreased fuel economy.

An overinflated tire will reduce the tire's footprint/contact patch with the road, thus reducing traction, braking capacity and handling of the motorhome. Overinflation of a tire for the load will result in a harsh ride, uneven tire wear and is susceptible to impact damage.

Maintaining correct tire inflation pressure is of the utmost importance and should be a part of regular maintenance checks.

WARNING:
Driving on a tire that is underinflated can exceed the design limits of the tire and may damage the sidewall. A damaged sidewall can burst upon inflation resulting in serious damage, injury or death. Aged tires are also susceptible to sidewall damage.

Load Inflation Table

Federal law requires the size of the tire, the tire's maximum inflation pressure and load capacity as well as load range be molded into the sidewall of the tire. The amount of inflation pressure to use is dependent upon the weight of the motorhome when fully loaded ready for travel. The load inflation table indicates inflation pressure based on weight.

Always comply with the tire manufacturer's recommended inflation pressure. This requires the motorhome be weighed in a loaded, ready to travel condition, to determine actual weight carried by the tires. Actual weight of the motorhome can vary significantly depending on how it is loaded. For optimum tire wear, ride and optimum handling always comply with the manufacturer's suggested inflation pressure. From the factory, tires are inflated to pressure(s) appropriate for the actual weight on each axle in the unloaded, as shipped condition. When the motorhome is loaded ready for travel, check and adjust inflation pressure on each tire as indicated in the load inflation table.

WARNING:
Do not overinflate or underinflate tires. Sudden tire failure can result.

The Federal Certification Label, attached to the wall adjacent to the Pilot's seat, lists the Gross Axle Weight Ratings (GAWR). These ratings are the maximum allowable weights per axle position.

When the actual loaded weight of the motorhome and the weight on each axle is unknown, follow the recommended tire inflation pressure(s) listed on the federal certification label. Never exceed the Gross Vehicle Weight Rating (GVWR) or the GAWR for each axle. Contact the tire manufacturer for further information concerning inflation pressure and other tire concerns.

NOTE:
The motorhome is equipped with Goodyear 295/80R/22.5 G670 RV Unisteel, Load Range H, radial tires at the time of printing. The motorhome manufacturer will not be responsible for substitution of an incorrect tire size or load range. Verify actual tire brand, size and load range before obtaining replacement tires.

Understanding the Load Inflation Table:
The tire size is listed in the left margin of the table. Inflation pressure and weight rating will vary depending if the wheel position has a single tire indicated by S or a dual wheel position (drive axle) indicated by a D. Locate the corresponding psi at the top columns to obtain the correct inflation pressure for a given wheel position. All tires on any axle must be inflated to the heaviest wheel position on that axle due to weight transfer that occurs when cornering.

NOTE:
Every load range has a maximum rating as well as a minimum rating. Do not exceed those ratings.

NOTE:
If weight of a wheel position is under the minimum weight rating, the tire(s) must be inflated to the minimum weight rating as listed in the table.

WARNING:
Do not exceed the tire manufacturer's maximum speed rating.

Inspecting & Pressure

Inflation pressure is rated at a cold psi. Cold psi is defined as early in the morning before the day's ambient temperature, sun's radiant heat or the heat generated while driving have caused the inflation pressure to temporarily increase. Check tire inflation pressure every morning before driving. Use a quality truck tire gauge with an angle airhead to ensure access to the dual wheel positions of the drive axle.

Ensure the valve cap is replaced on the stem after the inflation pressure is checked. Use valve stem caps with a positive seal to prevent air escaping from the valve stem. If there are extension hoses on the valve stem, make sure they are good quality reinforced stainless steel braid. Attach hoses securely to the outer wheel.

The valve stem cap guarantees the valve core will remain free of dirt and foreign material. Material lodged between the valve core and internal stem can cause slow leaks resulting in tire failure.

Optimum tire performance is achieved at proper inflation pressure for the load carried. Do not mix tires of different tread patterns, size or construction on the same axle. The difference in traction could cause rear end gear bind and mechanical damage to the drive train.

CAUTION:
Never let air out of a hot tire.

Tire Size	Max Speed Rating (MPH)	Single (S) Dual (D)	Inflation Pressure - PSI									
			80	**85**	**90**	**95**	**100**	**105**	**110**	**115**	**120**	**125**
295/80R22.5 Load Range H	**75**	S	5480	5750	6020	6285	6550	6810	7070	7320	**7580**	**7830(H)**
		D	4855	5100	5335	5570	5805	6035	6265	6490	**6720**	**6940(H)**

The motorhome manufacturer is not the author of this chart and makes no representation or warranty concerning the accuracy of the information disclosed by the chart. Monaco is not responsible for the accuracy of the information disclosed or for any errors within the Load Inflation Chart.
WARNING: Do not exceed tire manufacturer's maximum speed rating.

Overinflation can cause:
- Hard ride.
- Tire bruising or carcass damage.
- Rapid tread wear in the center of the tire.

Underinflation can cause:
- Tire squeal on turns.
- Separations.
- Rapid and uneven wear on the edges of the tread.
- Circumferential breaks.
- Tire container may bruise or rupture.
- Higher risk of road hazard.
- Tire cord breakage.
- Loss of casing durability.
- Excessive tire temperature.
- High fuel consumption.
- Reduced handling quality.

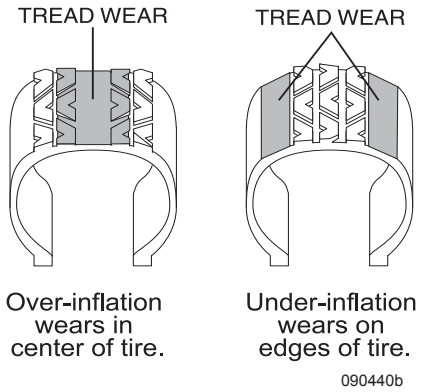

WARNING:
A slow leak may go unnoticed on one of the dual tires. This can cause the good tire to fail by exceeding the load limit. Tires with damaged sidewalls can burst upon inflation. A flat or nearly flat tire can also generate enough heat from friction to ignite.

Unequal tire pressures on same axle can cause:
- Uneven braking.
- Swerve upon acceleration.
- Steering lead.
- Torque steer.
- Reduced handling quality.

WARNING:
For safety purposes, clear the area of people and pets during tire inflation. Inflate tires using a remote inflation device.

Air Pressure Checklist

- When inspecting the tires, confirm the tires are cool before increasing or reducing air pressure. Driving a short distance can heat up tires.

NOTE:
If the motorhome must be driven a distance to get air, check and record the tire pressure first and add the recorded calculation when reaching the pump. It is normal for tires to heat up and the air pressure inside to go up as driven. Do not reduce air pressure when tires are hot.

- Remove the cap from the valve.
- Firmly press the tire gauge onto the valve and record reading.
- Add air to achieve recommended air pressure.
- If the tire is overinflated release air by pushing on the metal stem in the center of the valve. Recheck the pressure.
- Replace the valve cap.
- Repeat with each tire.
- Inspect all the tires for nails or other objects that could be embedded or puncture the tire and cause a leak.
- Check the sidewalls for gouges, cuts, bulges, or other irregularities.

NOTE:
Air pressure in a tire increases (warm weather) or decreases (cold weather) one to two pounds for every 10° F. of temperature change.

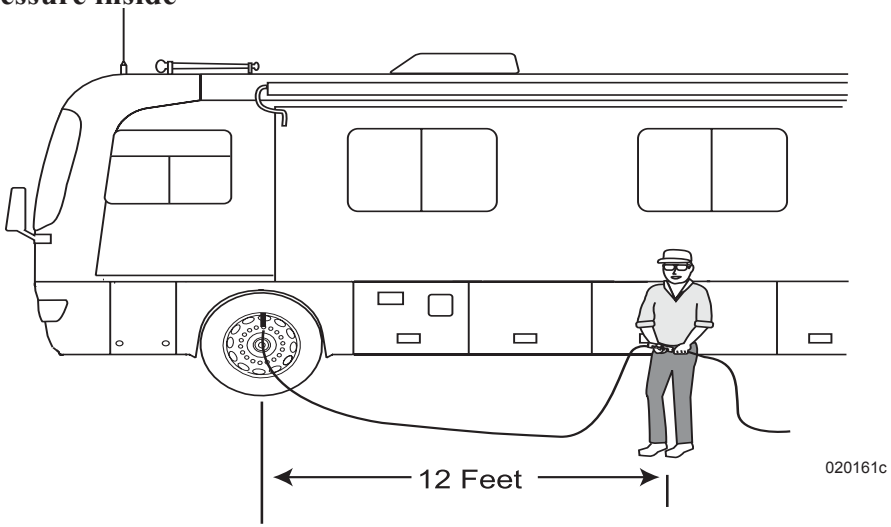

Tire Support When Leveling

Extreme caution must be taken to ensure the tires are fully supported when placing blocks under the tires. The load on the tire should be evenly distributed on the support block. In the case of dual tires, distribute the load evenly on blocks for both tires. If not properly supported, the steel cables in the sidewall of the tires may be damaged and could lead to premature fatigue of the sidewall.

CAUTION:
Supporting the tires prevents damage to the sidewall of the tires but does not prevent tire roll.

Tire Vibration

Sudden tire failure is often preceded by tire vibration. Symptoms that can cause tire failure are a bulge in the sidewall or swelling in the tire carcass. Striking an object or large hole in the road surface can damage a tire. Inspect the tires periodically thereafter as rotational forces can continue to stress damaged areas and later manifest in tire failure. If an unusual vibration begins or a bulge is noticed in the sidewall, have the tires evaluated by a qualified professional as soon as possible.

Tire Rotation

Tire rotation can increase the useful life of the tires by achieving uniform wear on all of the tires. Have the tire manufacturer determine the rotation pattern. The first tire rotation is the most important in determining which rotation pattern to use. Any unusual or unique wear patterns, or indications of uneven wear that may have developed, should be evaluated for possible tire rotation. Misalignment, imbalance or other mechanical problems may exist and will need to be corrected prior to rotation.

Tire Replacement

As represented within the tire manufacturer's published tire data guide, the size and rated load carrying capacity of the original equipment tires on your motorhome meet or exceed the motorhome's maximum axle weight/load ratings. Criteria used to determine when tire replacement is necessary are road hazard damage, wear, and age.

Tire replacement based on wear is determined by either measuring the tire's groove depth or a visual inspection of wear bars. Replace tires when the groove depth is 2/32" or less on rear tires and 4/32" or less on front tires. Wear bars are raised areas cast into the groove of the tire. Replace the tire when the wear bar in the groove is even (preferably before) with the road surface contact patch. A worn out tire cannot adequately channel water through the groove, which will result in hydroplaning.

Tire "Support" Methods

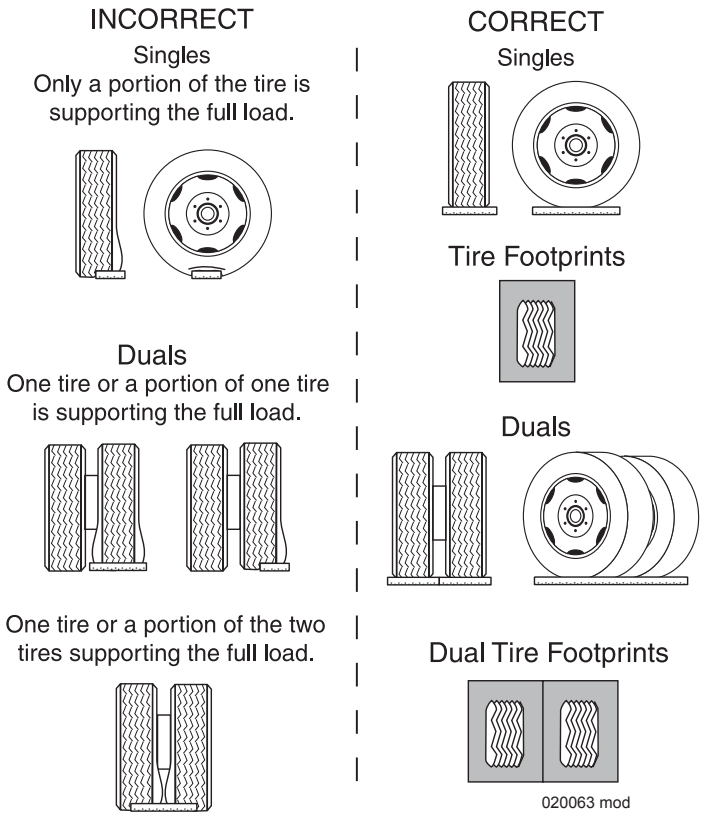

The tire manufacturer determines tire replacement based on age. While ozone inhibitors in the rubber help extend the life expectancy of a tire, exposure to the elements slowly breaks down the rubber, which can then suddenly fail when put to use. Tires that are five to seven years old (depending upon environment) are considered age worn and need to be replaced for safety even though the tire may not outwardly show age weathering and still has considerable tread.

Replacement tires on any axle, must be of the same manufacturer brand, model, size, and load range and must have a load rated carrying capacity equal to or greater than the original equipment tires. Mixing tires on any axle of a different brand, model, size, load rating and load range can cause unusual handling and uneven braking due to different traction coefficient and could result in sudden tire failure or loss of control due to non-symmetrical handling.

WARNING:
Any and all replacement tires must have a rated load carrying capacity equal to or greater than the gross axle weight/load ratings as identified by the federal certification label located adjacent to the Pilot's seat.

WARNING:
In many instances tire life is not determined by mileage or wear but by age. Tires are subject to weathering. Weathering cracks can appear in the sidewall and also run along the edge of the tire. Though the sidewall of the tire may look structurally sound, weathering can occur inside the groove of the tread. If any tire exhibits age weathering, replace all tires.

CAUTION:
Signs of irregular tread wear, exhibited by scalloping or unusually smooth areas on the tire surface, are cause for concern. Immediately have the tire manufacturer inspect the tires.

Built in tread wear indicators, or wear indicators that look like narrow strips of smooth rubber across the tread, appear on the tire when the tread is worn down to 2/32". The tire should be replaced when wear indicators appear. Visually check tires for signs of uneven wear. Irregular tread wear is usually exhibited by low or unusually smooth areas on the tire surface. Consult the tire manufacturer as soon as possible.

Storage of Tires - Long Term

A cool, dry garage with a sealed cement floor is the preferred method of storage. Tires stored outside may prematurely age.

Prior to Storage:
- Thoroughly clean the tires.
- Unload the motorhome to reduce weight on the tires.
- Ensure the surface is reasonably level, firm, clean and has good drainage.
- Inflate the tires to the maximum inflation pressure as indicated on the Federal Certification Label.

During Storage:
- Cover the tires to block direct sunlight.
- Periodically ensure tires are at proper pressure.
- Move the motorhome every three months to prevent cracking in bulge areas, as well as flat spotting from prolonged sidewall strain and tread deflection.

Removal from Storage:
Before removing the motorhome from long-term storage thoroughly **inspect** each tire's tread area and air pressure. If the tires have lost air during storage, inflate them to the correct pressure.

WHEEL MOUNTING

Hub Piloted Mounting:

- Flange nuts generate higher clamping force. Always use grade eight studs with hub mount wheels.
- Before installing the wheels, lubricate the hub pilot pads with a drop of oil to prevent galling. **Do not** lubricate any other wheel or hub surface.
- For a hub with intermittent pilot pads, position a pad at the twelve o'clock position to center the wheel and reduce runout.

NOTE:
Loosen and tighten lug nuts in sequence (see illustration). Sequence tighten to 50 ft. lbs. first, then sequence tighten to 500 ft. lbs. Overtightening can cause distortion.

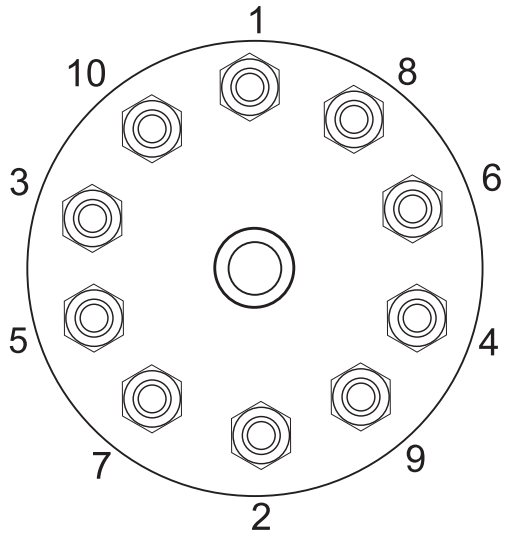

Nut Tightening Sequence

090268 copy2

WARNING:
Never use wheels or lug nuts different than the original equipment as this could damage the wheel or the mounting system. Damage to the wheel or mounting system could cause a wheel to come off while the motorhome is in motion.

Front Wheels:

Slide the front wheel over the studs. Use caution to avoid damaging stud threads. Snug the nuts in sequence. When all nuts have been seated, tighten the nuts to 500 ft. lbs. in sequence (as in illustration).

Dual Rear Wheels:

Slide the inner dual wheel over the studs. Use caution to avoid damaging threads. Align the handholds for valve access and slide the outer dual wheel over the studs, again using caution to avoid damaging the stud threads. When all nuts are seated, tighten the nuts to 500 ft. lbs. in sequence (as in illustration).

The hub mount wheels use two-piece flange cap nuts for both front and rear applications. No inner cap nuts are required.

Torque the Nuts Properly:

- Tighten the wheel nuts to the recommended lug nut torque. **Do not** overtighten.
- Maintain the nut torque at the recommended level through planned periodic checks or at 10,000 mile intervals, whichever comes first.
- If air wrenches are used, they must be periodically calibrated for the proper torque output. Use a torque wrench to check air wrench output and adjust line pressure for the correct torque.

For used nuts add two drops of oil between flange and hex.

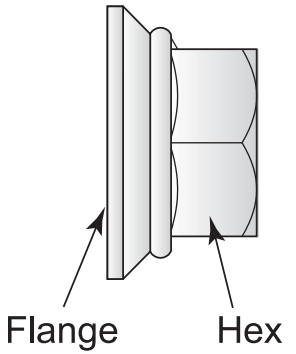

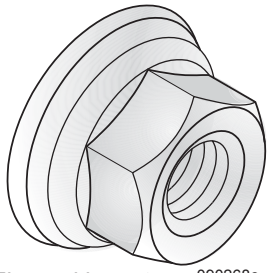

Flanged lugnut 090268c

WEIGHING THE MOTORHOME

Proper weight distribution, load management and operating within established limitations will aid in safe and enjoyable travel. The information in this section outlines guidelines and provides information on the proper techniques for weighing to accurately determine total weight, axle weights, balance and tire inflation pressure. According the National Highway Traffic Safety Administration, most tire failures are a result of under-inflated tires.

Load management, weight distribution and properly inflated tires are the responsibility of the operator. The motorhome must be weighed in a loaded, ready to travel condition to correctly determine how much weight is placed on each wheel position, then added to determine the overall weight upon a single axle.

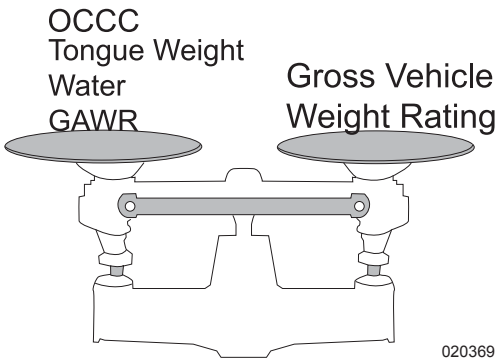

This may require one or more adjustments and the motorhome subsequently weighed again to verify proper and adequate adjustments. The first thing to determine is the maximum allowable weight of the motorhome. This information is found on the Federal Certification Label located adjacent to the driver seat under Gross Vehicle Weight Rating. This is the maximum allowable gross weight and cannot be exceeded.

Federal Certification and Weight Labels:

There will be two Federal Certification build labels and as many as three Federal Weight label(s) affixed to the motorhome.

Incomplete Vehicle Manufactured By –

This certification label lists the name of the chassis manufacturer, date of completion and location of construction. The gross vehicle weight rating and gross axle weight ratings. The tire size, load range and appropriate tire inflation pressure based on gross axle weight ratings when compared to the tire manufacturer load inflation table. Confirms the chassis conforms to U.S. Federal Motor Vehicle Safety Standards (FMVSS) under their respective guidelines. The Vehicle Identification Number (VIN) is located at the lower right.

INC VEH MFD BY: MONACO RV LLC ROADMASTER DIV.
COBURG, OREGON XXXXXX
Date of Manufacture: XX/XXXX

	GVWR	GAWR/FRT	GAWR/REAR		
kg(lbs)	XXXXX(XXXXX)	XXXX(XXXXX)	XXXXX(XXXXX)		
AXLE	TIRE SIZE - LR	RIM	kPa(psi)	COLD	
FRT	XXX/XXRxXX.XH	XX.XHxX.XX	XXX(XXX)	SINGLE	
REAR	XXX/XXRxXX.XH	XX.XHxX.XX	XXX(XXX)	DOUBLE	

THIS INCOMPLETE VEHICLE CONFORMS TO U.S. FEDERAL MOTOR VEHICLE SAFETY STANDARDS 102, 106, 119, 120, 121, 124 AND MAY BE MANUFACTURED AS A MULTIPURPOSE PASSENGER VEHICLE (MPV). THE COMPLETED VEHICLE WILL CONFORM TO THE AFORMENTIONED STANDARDS IF NO ALTERATIONS ARE MADE TO IDENTIFIED COMPONENTS.

VEHICLE IDENTIFICATION NO: XXXXXXXXXXXXXXXXX
100230a

Incomplete Vehicle Manufactured by Certification Label.

Manufactured By –

This certification label lists the body builder company and designate name, date of completion and location of construction and the name of the incomplete vehicle manufacturer. The gross vehicle weight rating and gross axle weight ratings. The tire size, load range and appropriate tire inflation pressure based on gross axle weight ratings when compared to the tire manufacturer's load inflation table. Confirms the completed vehicle conforms to all applicable U.S. Federal Motor Vehicle Safety Standards in effect as of the date of completion of manufacture. The vehicle identification number and the body builder Unit Serial number are located at the bottom of the label.

MFD BY: MONACO RV LLC Xxxxxxx Coach DIV. XX/XXXX
COBURG, OREGON
INC VEH MFD BY: ROADMASTER XX/XXXX

	GVWR	GAWR/FRT	GAWR/REAR		
kg(lbs)	XXXXX(XXXXX)	XXXX(XXXXX)	XXXXX(XXXXX)		
AXLE	TIRE SIZE - LR	RIM	kPa(psi)	COLD	
FRT	XXX/XXRxXX.XH	XX.XHxX.XX	XXX(XXX)	SINGLE	
REAR	XXX/XXRxXX.XH	XX.XHxX.XX	XXX(XXX)	DOUBLE	

THIS VEHICLE CONFORMS TO ALL APPLICABLE
U.S. FEDERAL MOTOR VEHICLE SAFETY STANDARDS IN
EFFECT ON DATE OF MANUFACTURE SHOWN ABOVE.
VEHICLE IDENTIFICATION NO.: XXXXXXXXXXXXXXXXX
TYPE: MPV/MHA (MH/AC) UNIT SERIAL #: XXXXXXXXXXXXXXXXXXXXX
100230a

Manufactured by Certification Label.

Factory Installed Federal Weight Label – This factory installed certification label attached on the screen door lists the vehicle identification number. The maximum allowable combined weight in Occupants and Cargo Carrying Capacity (OCCC). The designated number of seating positions equipped with safety belts for travel and the total amount of weight of fresh water based on the capacity of the fresh water tank and water heater tank. A duplicate weight label is installed next to the Federal Certification labels adjacent to the driver seat.

Dealer Installed Federal Weight Label – If this certification label is attached next to the factory installed weight label on the screen door, the dealer has installed equipment and/or accessories after the motorhome left the factory and prior to retail sale. This dealer installed label will list the amount of weight in equipment and/or accessories installed by the dealer. The amount of weight listed on the dealer installed label will reduce the amount Occupant and Cargo Carrying Capacity as stated on the factory installed label by the amount stated on the dealer installed weight label.

NOTE:
Do not remove these Federal Certification labels. These certificates confirm the chassis and body conform to guidelines and build practices as specified by the respective governmental agencies. The information on these certificates is used by the vehicle owner and the Department of Motor Vehicles (DMV) to register ownership and license the vehicle for travel.

CAUTION:
Most States limit the amount of weight carried by any single axle position. It is the responsibility of the operator to know the legal weight limit of the State in which they travel. Side roads, surface streets and bridges may further impose weight restrictions.

Weight Terms:
The following are definitions of terms used when weighing. It is important each weight term is understood.

- **Gross Vehicle Weight Rating (GVWR):** Maximum permissible weight of this motorhome. GVWR is equal to or greater than the sum of UVW plus OCCC.
- **Gross Combination Weight Rating (GCWR):** The sum of the maximum allowable loaded weight of this motorhome and any towed trailer or towed vehicle.
- **Gross Axle Weight Rating (GAWR):** Load-carrying capacity specified by manufacturer of a single axle system, as measured at tire ground interfaces.
- **Occupant and Cargo Carrying Capacity (OCCC):** Is the weight comprised of occupants, cargo, full fresh potable water weight including water heater and tongue weight of a towed load. Dealer installed equipment and/or accessories reduce OCCC.
- **Unloaded Vehicle Weight (UVW):** Is the weight of this vehicle as built at the factory with full fuel, engine oil, coolants, propane. Factory UVW may be increased by the addition of dealer installed equipment and/or accessories. UVW does not include occupants, cargo, full fresh potable water weight, including water heater, and the tongue weight of a towed load.

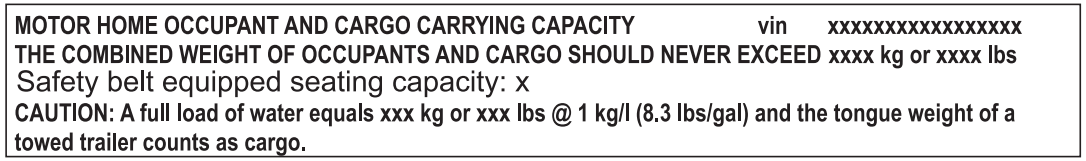

Factory Installed Federal Weight Label 100179h

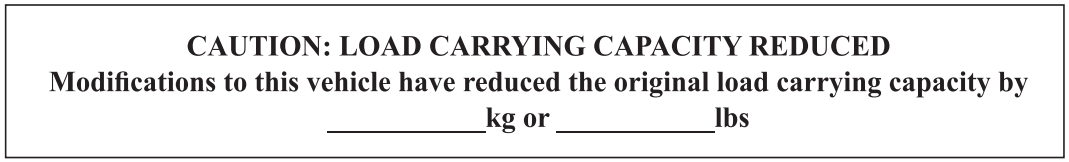

Dealer Installed Federal Weight Label 100179j

Weight Limits:



Weight limit sign. 100232

Numerous Federal, State and local governments mandate weight limits. Understanding the terminology and performing proper weighing procedures will help eliminate confusion. It is important to weigh the motorhome in a loaded, ready to travel condition to ensure the Occupant and Cargo Carrying Capacity (OCCC), GVWR or GAWR are not exceeded. The total weight of the motorhome in a loaded, ready to travel condition must not exceed the Gross Vehicle Weight Rating (GVWR) or the GAWR for a single axle.

The GVWR is the maximum total weight for which the motorhome is rated including occupants, fluids and cargo and any dealer installed equipment or accessories. The GAWR is the maximum weight for which a single axle is rated. The GCWR is the combined total of the GVWR and any towed load. The tires, wheels, chassis frame and/or drive train component(s) may limit the GVWR, GAWR or GCWR or any combination thereof.

Every recreational vehicle, even of the same make and model, will vary in actual loaded axle weight due to different options, floor plans, occupants and cargo. The motorhome must be weighed in a loaded, ready to travel condition to determine actual weight carried by each wheel position and axle.

Each wheel position must be weighed to determine no wheel position is overloaded and to confirm no single axle is overloaded.

It is possible be within the GVWR yet overloaded on one wheel position or axle. For this reason it is necessary to weigh each wheel position to determine the actual gross vehicle weight in a loaded, ready to travel condition and how that weight is distributed.

There are two important factors to consider when loading the motorhome: total weight and balance. When loading for travel, place heavy objects as low as possible, preferably on the floor or below in storage compartments. Load weight must be distributed as evenly as possible. Instructions and diagrams to properly weigh the motorhome are presented on the following pages. The heaviest wheel position on an axle will determine the tire inflation pressure for all tires on that axle. Reference the tire manufacturer load inflation table to determine the correct cold inflation pressure.

CAUTION:
State and Local authorities may impose weight restrictions to surface streets, bridges and parkways. These reductions can include maximum single axle weights or an overall maximum weight limitation based on the number of axles per vehicle.

Tire Pressure

The motorhome may weigh slightly heavier on one side. The heaviest wheel position (if applicable) on a single axle will determine the inflation pressure for all tires on that axle due to weight transfer that occurs when cornering. Improperly inflated tires can result in sudden tire failure (blowout). Cargo not properly balanced on the suspension, can result in poor handling, over-stressed chassis components, overloaded wheel positions and/or tires.

How the motorhome is loaded will influence tire inflation pressure and load carried by each axle. This is why each wheel position must be weighed. When the actual loaded weight of the motorhome and the weight on each axle are unknown, follow the recommended tire inflation pressure(s) listed on the federal certification label.

NOTE:
When adjusting tire inflation pressure, each tire on any axle must be inflated to the same pressure. The wheel position carrying the most weight will determine the tire inflation pressure for each tire of that particular axle.

WARNING:
Improperly inflated or overloaded tires can cause a blowout. An overloaded axle can cause a component failure of the suspension system. Tire blowouts or broken suspension components can lead to loss of vehicle control resulting in property damage, personal injury or death.

NOTE:
Contact the tire manufacturer for further information concerning tire inflation pressure and other tire concerns.

Occupant & Cargo Carrying Capacity:

Each motorhome, even of the same model year, floor plan and length, will weigh different due to options and accessories. The GVWR limits the weight of the entire load combination, regardless of the amount of weight of occupants, cargo, water, propane and tongue weight. Weighing will determine the GVWR is not exceeded as this is maximum allowable weight. However, Occupant & Cargo Carrying Capacity (OCCC) weight is comprised of variables in occupants, cargo, fresh water and tongue weight.

While the OCCC is a guide to the maximum allowable weight in combinations of occupants, cargo, water and tongue weight, the amount of weight in each of the categories (occupants, cargo, and water and tongue weight) can be adjusted so one can offset another or reduced entirely to gain advantage in GCWR. While maximum allowable weights are not to be exceeded, if one chooses to carry less water or no water, that can allow an increase in payload of cargo or tongue weight, offsetting one for another and still under maximum allowable weight of GVWR, GAWR, GCWR or OCCC.

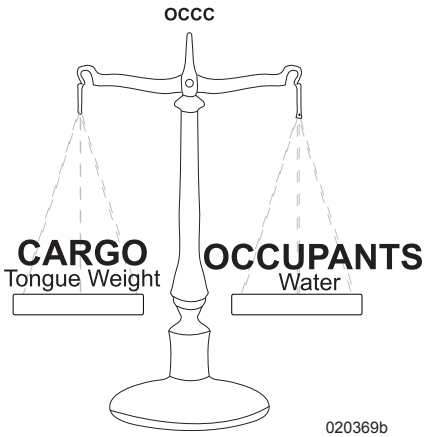

020369b

Scales

Certified public scales are located in moving and storage lots, farm supplies with grain elevators, gravel pits, recycling companies and large commercial truck stops. To locate a nearby public scale, check the yellow pages under Scales-Public or Weighers. Expect to pay a small fee.

Three basic types of scales:

- A large platform scale will allow the entire motorhome to fit on the scale to read the gross vehicle weight in one scale recording.
- A segmented platform scale is designed to weigh one axle at a time.
- A segmented platform scale per wheel position reads each wheel position at a time.

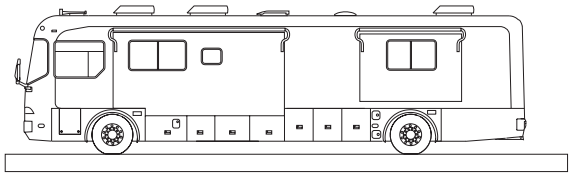
Single Platform

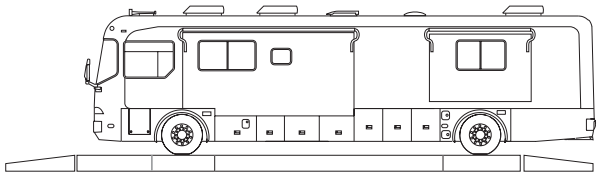
Segmented Platform per axle.

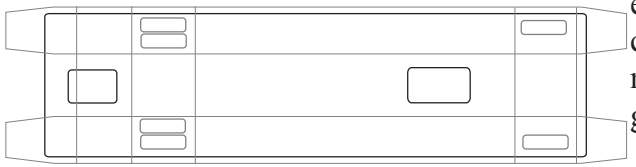
Segmented Platform (Top View) per wheel position.
100233

Each wheel position requires weighing to accurately determine the correct tire inflation pressure. When weighing, the scales and the motorhome must be level to obtain accurate scale readings. A definite lean in the motorhome will produce inaccurate scale readings.

INFORMATION:

The most accurate weighing method is to weigh each wheel position independently. Weighing the entire motorhome or a single axle will not reflect the actual weight carried by each wheel position. A segmented platform scale that reads a single axle may be used if a platform scale that will weigh each wheel position is unavailable. Divide the total axle reading by two for an approximation of what each wheel position may average. When weighing the dual wheel position on the drive axle, dividing that wheel position scale reading by two will determine the weight carried by each tire.

Four-Point Weighing

The motorhome must be weighed in a loaded, ready to travel condition to obtain accurate scale readings and to determine the proper tire pressure. All slide rooms must be retracted when weighing. The purpose for weighing the motorhome is to ensure the GVWR, GAWR and GCWR are not exceeded and that the tires are inflated to the correct pressure as recommended by the tire manufacturer. The exemplar worksheet is a guide.

- Record the GAWR of the front (steer) axle. Example: GAWR of the front axle listed on the Federal Certification label is 13,000 lbs. Using the chart, record 13,000 lbs. under front axle GAWR

Weigh roadside side front axle (Scale A) and record weight on chart Roadside front axle. Example: 6150 lbs.

Weigh curbside side front steer axle (Scale C) and record weight on chart Curbside front axle. Example: 6,200 lbs.

- Record the GAWR of the rear (drive) axle. Example: GAWR of the rear axle listed on the Federal Certification label is 20,000 lbs. Using the chart, record 20,000 lbs. under rear axle GAWR.

Weigh roadside drive axle (Scale B) and record weight on chart Roadside rear axle. Example: 9,350 lbs.

Weigh curbside drive axle (Scale D) and record weight on chart Curbside rear axle. Example: 9,500 lbs.

- Add scale readings from Roadside and Curbside front axle. Example: 12,350 lbs.
- Add scale readings from Roadside and Curbside rear axle. Example: 18,850 lbs.

	Gross Axle Weight Rating (GAWR)	Roadside	Curbside	Total Axle Weight	Sum DIfference
Front Axle	13,000	A. 6150	C. 6200	12,350	650
Rear Axle	20,000	B. 9350	D. 9500	18,850	1,150
Total	33,000	15,500	15,750	31,200	1,800

Exemplar Worksheet

100235b

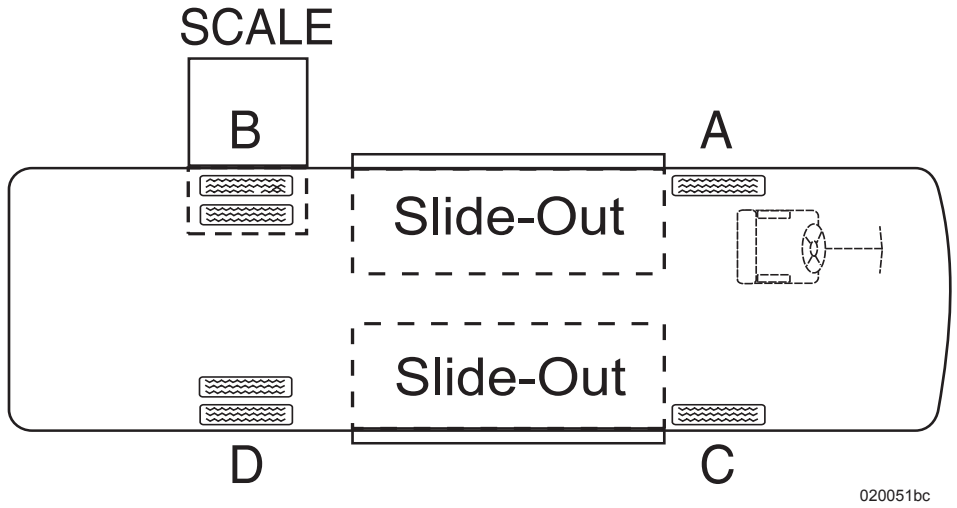

020051bc

If necessary, adjust payload so that no single GAWR is exceeded. Total weight must not exceed the GVWR. Once weights are verified, the next step is to determine tire size. This information is stamped into the sidewall of the tire. Example: The tire size reads as follows: 295/80R 22.5 with a load range H. Cross reference the tire size and load range to the Load Inflation Table. The heaviest wheel position of an axle will determine tire pressure for all tires on that axle due to weight transfer that occurs when cornering.

- Example: The curbside tire is the heavier wheel position on the front axle weighing 6,200 lbs. Tire pressure for a 295/80R 22.5 @ 6200 lbs. according to the Load Inflation Table with load range H will be 95 PSI.
- Drive axle uses two tires at one wheel position. Dividing the weight by two for that wheel position will determine how much weight each tire is supporting. The curbside drive axle wheel position weighs 9500 lbs. Each tire is supporting 4750 lbs. This falls below the minimum weight listed. The minimum inflation pressure would be 80 PSI for the drive axle tires.

WARNING:
Improperly inflated or overloaded tires can cause a blowout. An overloaded axle can cause a component failure of the suspension system. Tire blowout or broken suspension components can lead to loss of vehicle control resulting in property damage, personal injury or death.

	Gross Axle Weight Rating (GAWR)	Roadside	Curbside	Total Axle Weight	Sum DIfference
Front Axle		A.	C.		
Rear Axle		B.	D.		
Total					

Actual Worksheet 100236b

CAUTION:
If actual weight carried by any tire is below the load inflation table minimum pressure, inflate the tire(s) to the minimum inflation in the load inflation table. Setting tire pressure below the minimum inflation pressure can overheat and damage the tire casing leading to premature tire failure or blowout.

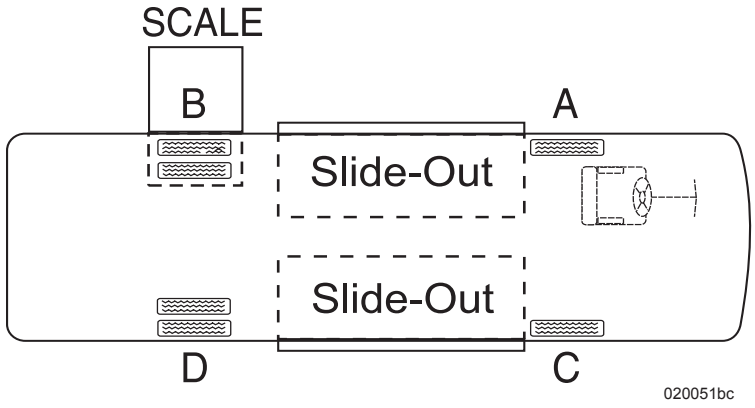

020051bc

Weight Record Sheet

PLACE: _____

FRONT: _____ + _____ = _____
LEFT RIGHT TOTAL

REAR: _____ + _____ = _____
LEFT RIGHT TOTAL

= _____
TOTAL GROSS VEHICLE WEIGHT

PLACE: _____

FRONT: _____ + _____ = _____
LEFT RIGHT TOTAL

REAR: _____ + _____ = _____
LEFT RIGHT TOTAL

= _____
TOTAL GROSS VEHICLE WEIGHT

PLACE: _____

FRONT: _____ + _____ = _____
LEFT RIGHT TOTAL

REAR: _____ + _____ = _____
LEFT RIGHT TOTAL

= _____
TOTAL GROS
VEHICLE WEIG

DATE: _____

PLACE: _____

FRONT: _____ + _____ = _____
LEFT RIGHT TOTAL

REAR: _____ + _____ = _____
LEFT RIGHT TOTAL

= _____
TOTAL GROSS VEHICLE WEIGHT

DATE: _____

PLACE: _____

FRONT: _____ + _____ = _____
LEFT RIGHT TOTAL

REAR: _____ + _____ = _____
LEFT RIGHT TOTAL

= _____
TOTAL GROSS VEHICLE WEIGHT

DATE: _____

PLACE: _____

FRONT: _____ + _____ = _____
LEFT RIGHT TOTAL

REAR: _____ + _____ = _____
LEFT RIGHT TOTAL

= _____
TOTAL GROSS VEHICLE WEIGH

DATE: _____

PLACE: _____

FRONT: _____ + _____ = _____
LEFT RIGHT TOTAL

REAR: _____ + _____ = _____
LEFT RIGHT TOTAL

= _____
TOTAL GROSS VEHICLE WEIGHT

DATE: _____

PLACE: _____

FRONT: _____ + _____ = _____
LEFT RIGHT TOTAL

REAR: _____ + _____ = _____
LEFT RIGHT TOTAL

= _____
TOTAL GROSS VEHICLE WEIGHT

DATE: _____

PLACE: _____

FRONT: _____ + _____ = _____
LEFT RIGHT TOTAL

REAR: _____ + _____ = _____
LEFT RIGHT TOTAL

= _____
TOTAL GROS
VEHICLE WEI

WEIGHING THE MOTORHOME-TAG AXLE

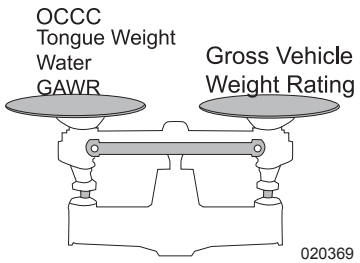

Proper weight distribution, load management and operating within established limitations will aid in safe and enjoyable travel. The information in this section outlines guidelines and provides information on the proper techniques for weighing to accurately determine total weight, axle weights, balance and tire inflation pressure. According the National Highway Traffic Safety Administration, most tire failures are a result of under-inflated tires.

Load management, weight distribution and properly inflated tires are the responsibility of the operator. The motorhome must be weighed in a loaded, ready to travel condition to correctly determine how much weight is placed on each wheel position, then added to determine the overall weight upon a single axle. This may require one or more adjustments and the motorhome subsequently weighed again to verify proper and adequate adjustments. The first thing to determine is the maximum allowable weight of the motorhome. This information is found on the Federal Certification Label located adjacent to the driver seat under Gross Vehicle Weight Rating. This is the maximum allowable gross weight and cannot be exceeded.

Federal Certification and Weight Labels:

There will be two Federal Certification build labels and as many as three Federal Weight label(s) affixed to the motorhome.

Incomplete Vehicle Manufactured By –

This certification label lists the name of the chassis manufacturer, date of completion and location of construction. The gross vehicle weight rating and gross axle weight ratings. The tire size, load range and appropriate tire inflation pressure based on gross axle weight ratings when compared to the tire manufacturer load inflation table. Confirms the chassis conforms to U.S. Federal Motor Vehicle Safety Standards (FMVSS) under their respective guidelines. The Vehicle Identification Number (VIN) is located at the lower right.

INC VEH MFD BY: MONACO RV LLC ROADMASTER DIV.
COBURG, OREGON XXXXXX

Date of Manufacture: XX/XXXX

	GVWR	GAWR/FRT	GAWR/REAR	GAWR/TAG
kg(lbs)	XXXXX(XXXXX)	XXXX(XXXXX)	XXXXX(XXXXX)	XXXX(XXXXX)
AXLE	TIRE SIZE - LR	RIM	kPa(psi) COLD	
FRT	XXX/XXRxXX.XH	XX.XHxX.XX	XXX(XXX)	SINGLE
REAR	XXX/XXRxXX.XH	XX.XHxX.XX	XXX(XXX)	DOUBLE
TAG	XXX/XXRxXX.XH	XX.XHxX.XX	XXX(XX)	SINGLE

THIS INCOMPLETE VEHICLE CONFORMS TO U.S. FEDERAL MOTOR VEHICLE SAFETY STANDARDS 102, 106, 119, 120, 121, 124 AND MAY BE MANUFACTURED AS A MULTIPURPOSE PASSENGER VEHICLE (MPV). THE COMPLETED VEHICLE WILL CONFORM TO THE AFORMENTIONED STANDARDS IF NO ALTERATIONS ARE MADE TO IDENTIFIED COMPONENTS.

VEHICLE IDENTIFICATION NO: XXXXXXXXXXXXXXXXX

100230c

Incomplete Vehicle Manufactured by Certification Label.

Manufactured By –

This certification label lists the body builder company and designate name, date of completion and location of construction and the name of the incomplete vehicle manufacturer. The gross vehicle weight rating and gross axle weight ratings. The tire size, load range and appropriate tire inflation pressure based on gross axle weight ratings when compared to the tire manufacturer's load inflation table.

MFD BY: MONACO RV LLC XX/XXXX
COBURG, OREGON

INC VEH MFD BY: ROADMASTER XX/XXXX

	GVWR	GAWR/FRT	GAWR/REAR	GAWR/TAG
kg(lbs)	XXXXX(XXXXX)	XXXX(XXXXX)	XXXXX(XXXXX)	XXXX(XXXXX)
AXLE	TIRE SIZE - LR	RIM	kPa(psi) COLD	
FRT	XXX/XXRxXX.XH	XX.XHxX.XX	XXX(XXX)	SINGLE
REAR	XXX/XXRxXX.XH	XX.XHxX.XX	XXX(XXX)	DOUBLE
TAG	XXX/XXRxXX.XH	XX.XHxX.XX	XXX(XX)	SINGLE

THIS VEHICLE CONFORMS TO ALL APPLICABLE U.S. FEDERAL MOTOR VEHICLE SAFETY STANDARDS IN EFFECT ON DATE OF MANUFACTURE SHOWN ABOVE.
VEHICLE IDENTIFICATION NO.: XXXXXXXXXXXXXXXXX
TYPE: MPV/MHA (MH/AC) UNIT SERIAL #: XXXXXXXXXXXXXXXXXXXXX

100230c

Manufactured by Certification Label.

Confirms the completed vehicle conforms to all applicable U.S. Federal Motor Vehicle Safety Standards in effect as of the date of completion of manufacture. The vehicle identification number and the body builder Unit Serial number are located at the bottom of the label.

MOTOR HOME OCCUPANT AND CARGO CARRYING CAPACITY vin xxxxxxxxxxxxxxxx
THE COMBINED WEIGHT OF OCCUPANTS AND CARGO SHOULD NEVER EXCEED xxxx kg or xxxx lbs
Safety belt equipped seating capacity: x
CAUTION: A full load of water equals xxx kg or xxx lbs @ 1 kg/l (8.3 lbs/gal) and the tongue weight of a towed trailer counts as cargo.

Factory Installed Federal Weight Label 100179i

CAUTION: LOAD CARRYING CAPACITY REDUCED
Modifications to this vehicle have reduced the original load carrying capacity by _____kg or _____lbs

Dealer Installed Federal Weight Label 100179j

Factory Installed Federal Weight Label – This factory installed certification label attached on the screen door lists the vehicle identification number. The maximum allowable combined weight in Occupants and Cargo Carrying Capacity (OCCC). The designated number of seating positions equipped with safety belts for travel and the total amount of weight of fresh water based on the capacity of the fresh water tank and water heater tank. A duplicate weight label is installed next to the Federal Certification labels adjacent to the driver seat.

Dealer Installed Federal Weight Label – If this certification label is attached next to the factory installed weight label on the screen door, the dealer has installed equipment and/or accessories after the motorhome left the factory and prior to retail sale. This dealer installed label will list the amount of weight in equipment and/or accessories installed by the dealer. The amount of weight listed on the dealer installed label will reduce the amount Occupant and Cargo Carrying Capacity as stated on the factory installed label by the amount stated on the dealer installed weight label.

NOTE:
Do not remove these Federal Certification labels. These certificates confirm the chassis and body conform to guidelines and build practices as specified by the respective governmental agencies. The information on these certificates is used by the vehicle owner and the Department of Motor Vehicles (DMV) to register ownership and license the vehicle for travel.

CAUTION:
Most States limit the amount of weight carried by any single axle position. It is the responsibility of the operator to know the legal weight limit of the State in which they travel. Side roads, surface streets and bridges may further impose weight restrictions.

Weight Terms

The following are definitions of terms used when weighing. It is important each weight term is understood.

- **Gross Vehicle Weight Rating (GVWR):** Maximum permissible weight of this motorhome. GVWR is equal to or greater than the sum of UVW plus OCCC.
- **Gross Combination Weight Rating (GCWR):** The sum of the maximum allowable loaded weight of this motorhome and any towed trailer or towed vehicle.
- **Gross Axle Weight Rating (GAWR):** Load-carrying capacity specified by manufacturer of a single axle system, as measured at tire ground interfaces.
- **Occupant and Cargo Carrying Capacity (OCCC):** Is the weight comprised of occupants, cargo, full fresh potable water weight including water heater and tongue weight of a towed load. Dealer installed equipment and/or accessories reduce OCCC.
- **Unloaded Vehicle Weight (UVW):** Is the weight of this vehicle as built at the factory with full fuel, engine oil, coolants, propane. Factory UVW may be increased by the addition of dealer installed equipment and/or accessories. UVW does not include occupants, cargo, full fresh potable water weight, including water heater, and the tongue weight of a towed load.

Weight Limits:

Numerous Federal, State and local governments mandate weight limits. Understanding the terminology and performing proper weighing procedures will help eliminate confusion. It is important to weigh the motorhome in a loaded, ready to travel condition to ensure the Occupant and Cargo Carrying Capacity (OCCC), GVWR or GAWR are not exceeded.



Weight limit sign. 100232

The total weight of the motorhome in a loaded, ready to travel condition must not exceed the Gross Vehicle Weight Rating (GVWR) or the GAWR for a single axle.The GVWR is the maximum total weight for which the motorhome is rated including occupants, fluids and cargo and any dealer installed equipment or accessories. The GAWR is the maximum weight for which a single axle is rated. The GCWR is the combined total of the GVWR and any towed load. The tires, wheels, chassis frame and/or drive train component(s) may limit the GVWR, GAWR or GCWR or any combination thereof.

Every recreational vehicle, even of the same make and model, will vary in actual loaded axle weight due to different options, floor plans, occupants and cargo. The motorhome must be weighed in a loaded, ready to travel condition to determine actual weight carried by each wheel position and axle.

Each wheel position must be weighed to determine no wheel position is overloaded and to confirm no single axle is overloaded. It is possible be within the GVWR yet overloaded on one wheel position or axle. For this reason it is necessary to weigh each wheel position to determine the actual gross vehicle weight in a loaded, ready to travel condition and how that weight is distributed.

There are two important factors to consider when loading the motorhome: total weight and balance. When loading for travel, place heavy objects as low as possible, preferably on the floor or below in storage compartments. Load weight must be distributed as evenly as possible. Instructions and diagrams to properly weigh the motorhome are presented on the following pages. The heaviest wheel position on an axle will determine the tire inflation pressure for all tires on that axle. Reference the tire manufacturer load inflation table to determine the correct cold inflation pressure.

CAUTION:
State and Local authorities may impose weight restrictions to surface streets, bridges and parkways. These reductions can include maximum single axle weights or an overall maximum weight limitation based on the number of axles per vehicle.

Tag Axle Regulator

The motorhome tag axle is equipped with an air pressure regulator. The tag axle regulator requires adjustment for the tag axle to maintain proper weight distribution. The adjustable regulator and gauge are located in the engine compartment.

The regulator controls the amount of air pressure in the tag axle air bags. Increasing air pressure in the tag axle air bags will increase weight carried by the tag axle and decrease weight carried by the drive axle. Decreasing air pressure in the tag axle air bags will decrease weight carried by the tag axle and increase weight carried by the drive axle.

The regulator adjustment knob has a positive lock. Pull up on the knob to unlock; push down on the knob to lock. Turn the knob clockwise to increase air pressure; turn the knob counterclockwise to decrease air pressure. A stabilization procedure must be performed every time the regulator is adjusted to enable a constant air pressure setting.

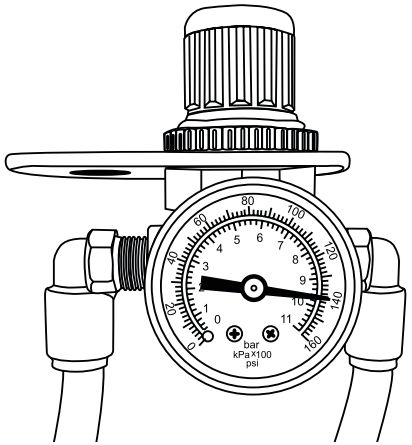

090507c
Tag axle regulator located in curbside rear compartment.

Tag Axle Adjustment

- Start the motorhome and allow the air system to reach a full charge, indicated by release of air from the air dryer.
- Pull the knob to unlock the regulator. Turn the knob clockwise to increase pressure and counterclockwise to decrease.
- Ensure the air system is still at full charge.
- Raise the tag axle using the tag axle switch on the driver console. Allow approximately 20 seconds for the system to discharge air from the tag axle air bags.
- Lower the tag axle. The regulator will hold the new air pressure setting.
- Push down on the regulator adjustment knob to lock the setting.

When increasing the air pressure setting, allow approximately a 2 lbs. pressure increase before the stabilization process.

Example: If the desired setting is 30 psi, slowly rotate the regulator adjustment knob clockwise to 28 psi. Perform the stabilization procedure. Regulator setting will stabilize to approximately 30 psi.

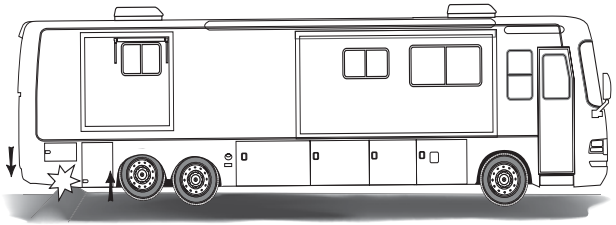

090507

CAUTION:
Deflating the tag axle air bags reduces ground clearance.

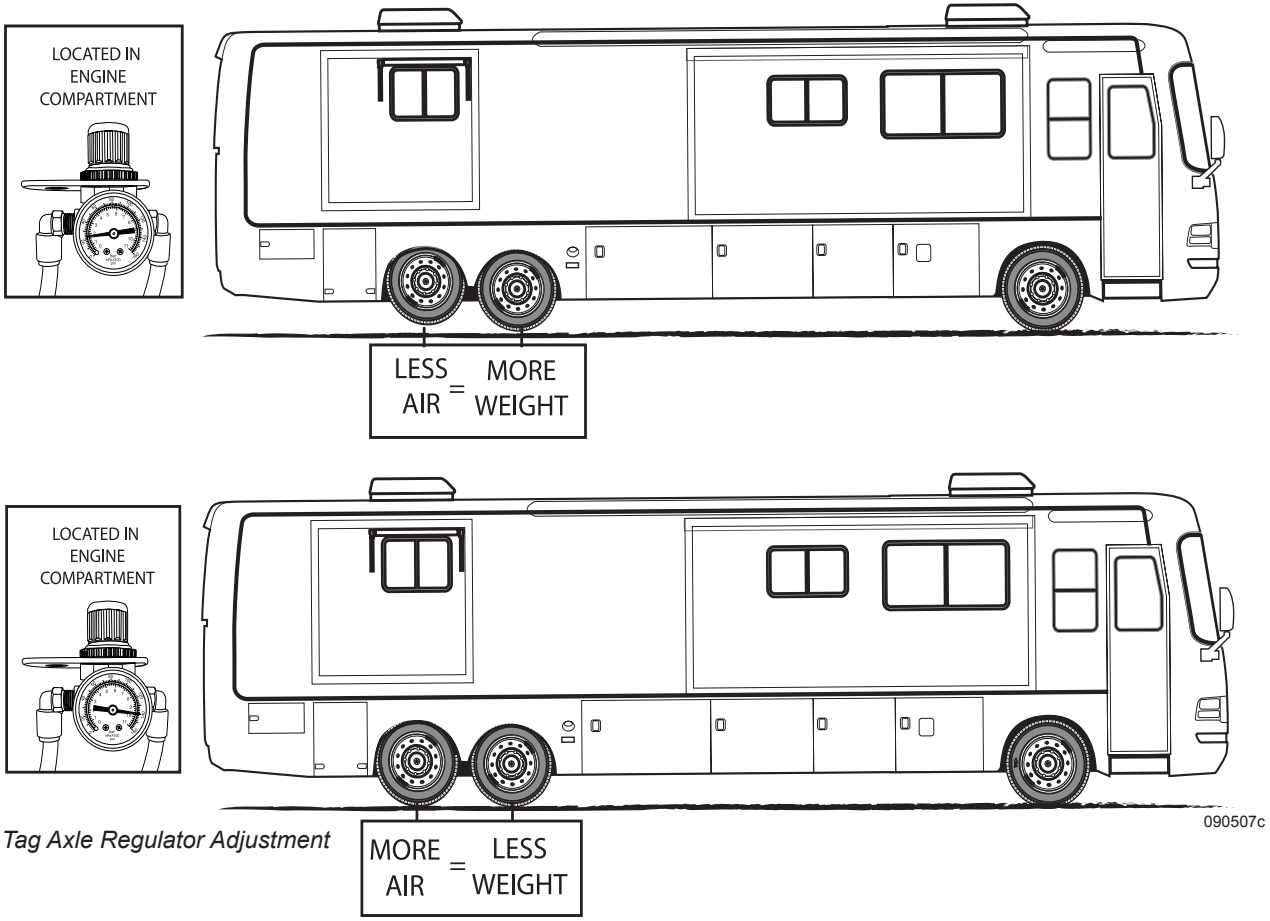

Tag Axle Regulator Adjustment

Tire Pressure

The motorhome may weigh slightly heavier on one side. The heaviest wheel position (if applicable) on a single axle will determine the inflation pressure for all tires on that axle due to weight transfer that occurs when cornering. Improperly inflated tires can result in sudden tire failure (blowout). Cargo not properly balanced on the suspension, can result in poor handling, over-stressed chassis components, overloaded wheel positions and/or tires.

How the motorhome is loaded will influence tire inflation pressure and load carried by each axle. This is why each wheel position must be weighed. When the actual loaded weight of the motorhome and the weight on each axle are unknown, follow the recommended tire inflation pressure(s) listed on the federal certification label.

NOTE:
When adjusting tire inflation pressure, each tire on any axle must be inflated to the same pressure. The wheel position carrying the most weight will determine the tire inflation pressure for each tire of that particular axle.

WARNING:
Improperly inflated or overloaded tires can cause a blowout. An overloaded axle can cause a component failure of the suspension system. Tire blowouts or broken suspension components can lead to loss of vehicle control resulting in property damage, personal injury or death.

NOTE:
Contact the tire manufacturer for further information concerning tire inflation pressure and other tire concerns.

Occupant & Cargo Carrying Capacity:

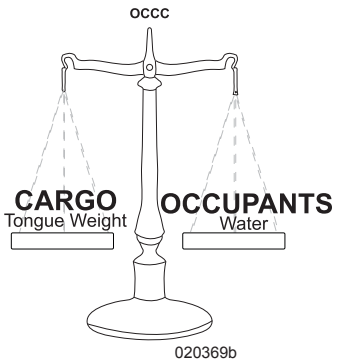

Each motorhome, even of the same model year, floor plan and length, will weigh different due to options and accessories. The GVWR limits the weight of the entire load combination, regardless of the amount of weight of occupants, cargo, water, propane and tongue weight. Weighing will determine the GVWR is not exceeded as this is maximum allowable weight. However, Occupant & Cargo Carrying Capacity (OCCC) weight is comprised of variables in occupants, cargo, fresh water and tongue weight.

While the OCCC is a guide to the maximum allowable weight in combinations of occupants, cargo, water and tongue weight, the amount of weight in each of the categories (occupants, cargo, and water and tongue weight) can be adjusted so one can offset another or reduced entirely to gain advantage in GCWR. While maximum allowable weights are not to be exceeded, if one chooses to carry less water or no water, that can allow an increase in payload of cargo or tongue weight, offsetting one for another and still under maximum allowable weight of GVWR, GAWR, GCWR or OCCC.

Scales

Certified public scales are located in moving and storage lots, farm supplies with grain elevators, gravel pits, recycling companies and large commercial truck stops. To locate a nearby public scale, check the yellow pages under Scales-Public or Weighers. Expect to pay a small fee.

Three basic types of scales:

- A large platform scale will allow the entire motorhome to fit on the scale to read the gross vehicle weight in one scale recording.
- A segmented platform scale is designed to weigh one axle at a time.
- A segmented platform scale per wheel position reads each wheel position at a time.

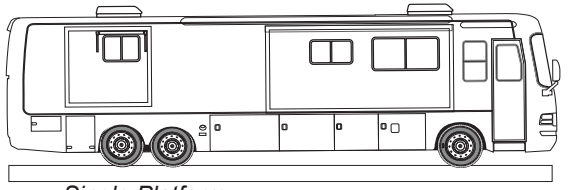

Single Platform

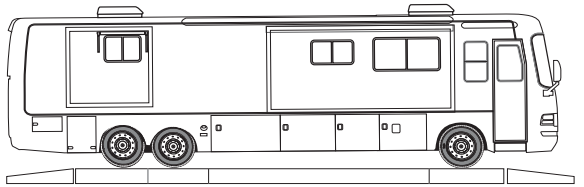

Segmented Platform per axle.

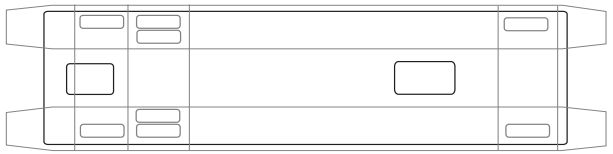

Segmented Platform (Top View) per wheel position. 100233

Each wheel position requires weighing to accurately determine the correct tire inflation pressure. When weighing, the scales and the motorhome must be level to obtain accurate scale readings. A definite lean in the motorhome will produce inaccurate scale readings.

INFORMATION:
The most accurate weighing method is to weigh each wheel position independently. Weighing the entire motorhome or a single axle will not reflect the actual weight carried by each wheel position. A segmented platform scale that reads a single axle may be used if a platform scale that will weigh each wheel position is unavailable. Divide the total axle reading by two for an approximation of what each wheel position may average. When weighing the dual wheel position on the drive axle, dividing that wheel position scale reading by two will determine the weight carried by each tire.

Six-Point Weighing

The motorhome must be weighed in a loaded, ready to travel condition to obtain accurate scale readings and to determine the proper tire pressure. All slide rooms must be retracted when weighing. The purpose for weighing the motorhome is to ensure the GVWR, GAWR and GCWR are not exceeded and that the tires are inflated to the correct pressure as recommended by the tire manufacturer. The exemplar worksheet is a guide.

	Gross Axle Weight Rating (GAWR)	Roadside	Curbside	Total Axle Weight	Sum DIfference
Front Axle	13,000	A. 6150	D. 6200	12,350	650
Rear Axle	20,000	B. 9350	E. 9500	18,850	1,150
Tag Axle	10,000	C. 4400	F. 4250	8,650 @ 75 PSI	1,350
Total	43,000	19,900	19,950	39,850	3,150

100235b

Exemplar Worksheet

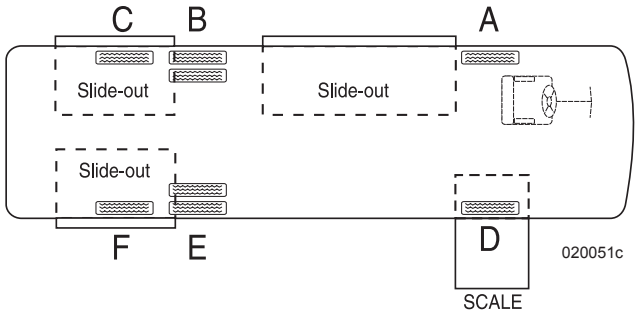

- Record the GAWR of the front (steer) axle. Example: GAWR of the front axle listed on the Federal Certification label is 13,000 lbs.

Using the chart, record 13,000 lbs. under front axle GAWR.

Weigh roadside side front axle (Scale A) and record weight on chart Roadside front axle. Example: 6150 lbs.

Weigh curbside side front steer axle (Scale D) and record weight on chart Curbside front axle. Example: 6,200 lbs.

- Record the GAWR of the rear (drive) axle. Example: GAWR of the rear axle listed on the Federal Certification label is 20,000 lbs. Using the chart, record 20,000 lbs. under rear axle GAWR.

Weigh roadside drive axle (Scale B) and record weight on chart Roadside rear axle. Example: 9,350 lbs.

Weigh curbside drive axle (Scale E) and record weight on chart Curbside rear axle. Example: 9,500 lbs.

- Record the GAWR of the tag axle. Example: GAWR of the tag axle listed on the Federal Certification label is 10,000 lbs. Using the chart, record 10,000 lbs. under Tag axle GAWR.

Weigh roadside tag axle (Scale C) and record weight on chart Roadside tag axle. Example: 4,400 lbs.

Weigh curbside tag axle (Scale F) and record weight on chart Curbside tag axle. Example: 4,250 lbs.

- Add scale readings from Roadside and Curbside front axle. Example: 12,350 lbs.
- Add scale readings from Roadside and Curbside rear axle. Example: 18,850 lbs.
- Add scale readings from Roadside and Curbside tag axle. Example: 8,650 lbs.
- If necessary, adjust tag axle regulator to compensate for payload carried by the tag axle and drive axle then record the new pressure setting. Perform the regulator stabilization procedure to ensure proper adjustment.

NOTE:
Adjustments made to the Tag Axle Regulator will require repeated weighing procedures.

If necessary, adjust payload so that no single GAWR is exceeded. Total weight must not exceed the GVWR. Once weights are verified, the next step is to determine tire size. This information is stamped into the sidewall of the tire. Example: The tire size reads as follows: 295/80r 22.5 with a load range H. Cross reference the tire size and load range to the Load Inflation Table. The heaviest wheel position of an axle will determine tire pressure for all tires on that axle due to weight transfer that occurs when cornering.

- Example: The curbside tire is the heavier wheel position on the front axle weighing 6,200 lbs. Tire pressure for a 295/80r 22.5 @ 6200 lbs. according to the Load Inflation Table with load range H will be 95 PSI.
- Drive axle uses two tires at one wheel position. Dividing the weight by two for that wheel position will determine how much weight each tire is supporting. The curbside drive axle wheel position weighs 9500 lbs. Each tire is supporting 4750 lbs. This falls below the minimum weight listed. The minimum inflation pressure would be 80 PSI for the drive axle tires.
- The roadside is the heavier wheel position on the Tag axle @ 4400 lbs. This falls below the minimum weight listed. The minimum inflation pressure would be 80 PSI for the tag axle tires.

	Gross Axle Weight Rating (GAWR)	Roadside	Curbside	Total Axle Weight	Sum DIfference
Front Axle		A.	D.		
Rear Axle		B.	E.		
Tag Axle		C.	F.		
Total					

Actual Worksheet 100236b

WARNING:
Improperly inflated or overloaded tires can cause a blowout. An overloaded axle can cause a component failure of the suspension system. Tire blowout or broken suspension components can lead to loss of vehicle control resulting in property damage, personal injury or death.

CAUTION:
If actual weight carried by any tire is below the tire chart weight specification minimum tire pressure the minimum inflation pressure must be maintained. Tire pressure below the minimum inflation pressure can overheat and damage the tire casing leading to premature tire failure or blowout.

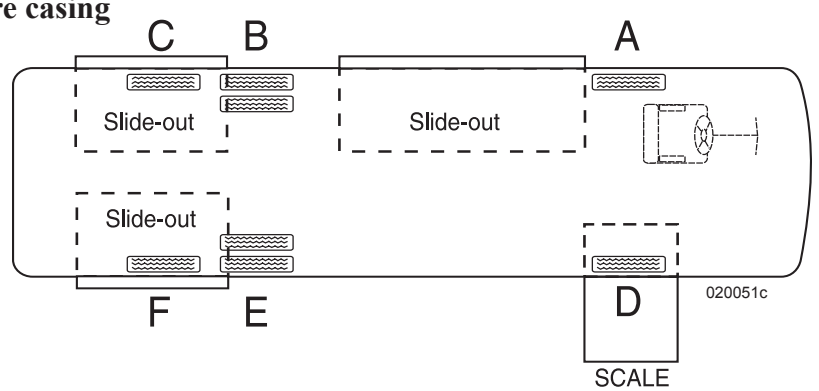

Weight Record Sheet Tag Axle

DATE: _____

PLACE: _____

FRONT: _____ (LEFT) + _____ (RIGHT) = _____ (TOTAL)

REAR: _____ (LEFT) + _____ (RIGHT) = _____ (TOTAL)

TAG: _____ (LEFT) + _____ (RIGHT) = _____ (TOTAL)

= _____ TOTAL GROSS VEHICLE WEIGHT

DATE: _____

PLACE: _____

FRONT: _____ (LEFT) + _____ (RIGHT) = _____ (TOTAL)

REAR: _____ (LEFT) + _____ (RIGHT) = _____ (TOTAL)

TAG: _____ (LEFT) + _____ (RIGHT) = _____ (TOTAL)

= _____ TOTAL GROSS VEHICLE WEIGHT

DATE: _____

PLACE: _____

FRONT: _____ (LEFT) + _____ (RIGHT) = _____ (TOTAL)

REAR: _____ (LEFT) + _____ (RIGHT) = _____ (TOTAL)

TAG: _____ (LEFT) + _____ (RIGHT) = _____ (TOTAL)

= _____ TOTAL GROSS VEHICLE WEIGHT

DATE: _____

PLACE: _____

FRONT: _____ (LEFT) + _____ (RIGHT) = _____ (TOTAL)

REAR: _____ (LEFT) + _____ (RIGHT) = _____ (TOTAL)

TAG: _____ (LEFT) + _____ (RIGHT) = _____ (TOTAL)

= _____ TOTAL GROSS VEHICLE WEIGHT

DATE: _____

PLACE: _____

FRONT: _____ (LEFT) + _____ (RIGHT) = _____ (TOTAL)

REAR: _____ (LEFT) + _____ (RIGHT) = _____ (TOTAL)

TAG: _____ (LEFT) + _____ (RIGHT) = _____ (TOTAL)

= _____ TOTAL GROSS VEHICLE WEIGHT

DATE: _____

PLACE: _____

FRONT: _____ (LEFT) + _____ (RIGHT) = _____ (TOTAL)

REAR: _____ (LEFT) + _____ (RIGHT) = _____ (TOTAL)

TAG: _____ (LEFT) + _____ (RIGHT) = _____ (TOTAL)

= _____ TOTAL GROSS VEHICLE WEIGHT

DATE: _____

PLACE: _____

FRONT: _____ (LEFT) + _____ (RIGHT) = _____ (TOTAL)

REAR: _____ (LEFT) + _____ (RIGHT) = _____ (TOTAL)

TAG: _____ (LEFT) + _____ (RIGHT) = _____ (TOTAL)

= _____ TOTAL GROSS VEHICLE WEIGHT

DATE: _____

PLACE: _____

FRONT: _____ (LEFT) + _____ (RIGHT) = _____ (TOTAL)

REAR: _____ (LEFT) + _____ (RIGHT) = _____ (TOTAL)

TAG: _____ (LEFT) + _____ (RIGHT) = _____ (TOTAL)

= _____ TOTAL GROSS VEHICLE WEIGHT

DATE: _____

PLACE: _____

FRONT: _____ (LEFT) + _____ (RIGHT) = _____ (TOTAL)

REAR: _____ (LEFT) + _____ (RIGHT) = _____ (TOTAL)

TAG: _____ (LEFT) + _____ (RIGHT) = _____ (TOTAL)

= _____ TOTAL GROSS VEHICLE WEIGHT

SMOKE DETECTOR

Statistics show that most fire casualties are not caused by direct flame, but by less visible smoke (products of combustion). The smoke detector automatically returns from alarm to normal state when the reason for activation, the presence of smoke, is completely removed. Reduce risk of fire by being safety conscious.

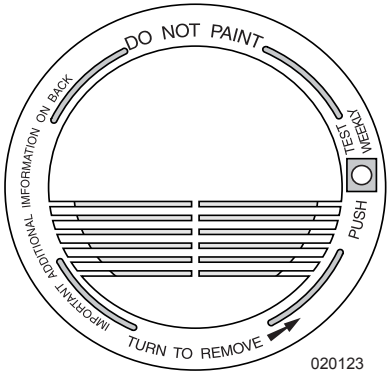

Located on ceiling

WARNING:
There is no way to ensure against injury or loss of life in a fire; however, the smoke detector is intended to help reduce the risk of tragedy. Additional smoke detectors may help to reduce the risk. Proper use and care of the smoke detector could save lives.

INFORMATION:
Refer to the smoke detector OEM manual for detailed information and maintenance information.

Operation

When a 9 Volt DC battery is correctly connected the LED flashes every minute and a loud alarm will sound when a production of combustion is sensed.

NOTE:
The unit will not operate without a battery. A battery flag will pop up preventing the unit from being installed to the mounting bracket without a battery. Carbon Zinc batteries average a service life of one year. Alkaline batteries average a service life of one to two years.

Testing

Simply press the test button on the smoke alarm cover for approximately three seconds. The alarm will sound if all electronic circuitry, horn and battery are working properly. The smoke alarm should be tested at least once a week when the motorhome is in use, prior to each trip and when the motorhome has been in storage. When testing the smoke alarm it is advised to stand at arm's length or muffle the alarm.

CAUTION:
Never use an open flame to test the smoke alarm as this may ignite the alarm or surrounding area.

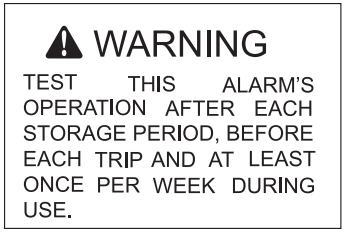

Maintenance

Maintenance for Proper Operation:
- Test the smoke alarm once a week.
- Keep a supply of 9 Volt DC batteries on hand.
- Periodically vacuum the slots in the cover and sides with a soft brush attachment. Test the smoke alarm after the unit has been vacuumed.
- The smoke alarm will beep once a minute when battery power is low. Immediately replace the battery.

Troubleshooting

If the alarm does not sound when the test button is pushed, or with a smoke test, try the following:

- **Inspect** alarm for obvious damage.
- Check for the recommended battery type.
- Check the battery for proper connection or replace the battery if needed.
- Gently vacuum as recommended.

If these procedures do not correct the problem, **Do not** attempt repairs. Contact the manufacturer of the alarm if the smoke alarm is within the warranty period. Smoke detectors beyond the warranty period cannot be economically repaired.

CARBON MONOXIDE DETECTOR

American National Standards Institute **(ANSI) 119.2 - Fire & Life Safety 6.4.6 Carbon Monoxide Detectors** states *"CO detectors used must be listed as suitable for use in RV's and installed in accordance within the terms of their listing. No specific mounting location is mandated for CO detectors; only that they be installed in accordance with their listing. The installation of the CO detector mounting bracket alone will be considered acceptable as long as the CO detector is provided.*

A CO detector is required to be installed in any RV that either contains an internal combustion engine or is designed to have one installed. This would include all motorized RV's, regardless of whether the fuel source is gasoline, diesel, propane, or other alternate fuel. This would also include an RV equipped with a generator or designed to accommodate future installation of a generator (commonly called "generator prep" setups). This would not include RV's equipped to store or transport internal combustion engine vehicles.

Also, all truck campers must have a CO detector installed, since an internal combustion engine is ultimately present once the truck camper is mounted on a pickup truck."

INFORMATION:
Refer to the CO detector OEM manual for detailed information and maintenance information.

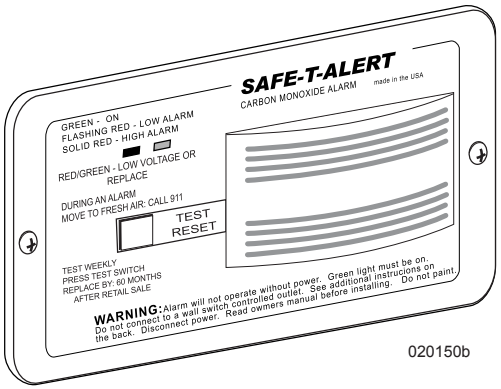

Located in bedroom

The motorhome is equipped with a Carbon Monoxide detector. Everyone is at risk with Carbon Monoxide poisoning. Carbon Monoxide (CO) is a colorless, odorless and tasteless gas that binds with hemoglobin reducing the body's ability to absorb and carry oxygen to vital organs. Even low levels of CO have been known to cause brain and other vital organ damage in unborn infants, with no effect on the mother.

When removed from exposure, the symptoms dissipate as Carbon Monoxide is expelled through the lungs. Level of contamination in the body reduces at half-life increments at approximately four-hour intervals. Treatment with Oxygen will quicken recovery time.

In cases of mild exposure, the symptoms may include: a slight headache, nausea, vomiting and fatigue. Some consider this a "Flu-like Symptom." Symptoms for medium exposure may include a severe throbbing headache, drowsiness, confusion and fast heart rate. Extreme exposure can result in unconsciousness, convulsions, cardiorespiratory failure and death.

Young children and household pets may be the first affected. Other highly sensitive people include the elderly and those with lung or heart disease or anemia. The CO detector is designed to detect the toxic CO Gas resulting from incomplete combustion of any fuel. This can be gasoline, propane, natural gas, oil, charcoal or wood. Anything that burns fuel such as engines, generators, furnaces, gas stoves or water heaters, produce CO Gas. Consequently, it is uncommon for household smoke from cigarettes or normal cooking to cause the alarm to sound.

CAUTION:
Activation of this device indicates the presence of Carbon Monoxide (CO), which can be fatal. A concentration of above 100 PPM will cause a warning condition. Individuals with medical problems may consider using detection devices with lower Carbon Monoxide alarming capabilities. Prolonged exposure to the horn at a close distance may be harmful to hearing.

WARNING:
Constant beeping and a flashing red light means CO gas has been detected. Shut off all sources of CO such as propane appliances, the engine, generator ect. Open vents and windows to ventilate the motorhome. Evacuate the motorhome until conditions are safe to re-enter. Determine the source of the alarm and have the problems corrected before resuming operation.

The CO detector is wired to the house batteries. This allows reliable protection by alerting the build up of potentially dangerous levels of Carbon Monoxide. Once powered, the detector will run through a brief warm-up and shelf check prior to monitoring for CO gas.

Operation

The detector is equipped with a self-cleaning CO sensor and requires a ten minute initial warm-up period to clean the sensor element and achieve stabilization. During the warm-up period, the green power light will flash On and Off. The green power light should be lit when the power is on. If the light is not lit, turn off the power and check all wire connections. If the power is on and the connections are correct, but the indicator still does not light, the detector should be returned for service. **Do not** attempt to fix the detector. The indicator light displays a specific color to monitor along with a matching sound pattern.

Indicator Lights and Sound Patterns:

- On or normal condition is indicated by green. The CO detector has power and is sensing air for the presence of CO Gas. The alarm will not sound.
- Flashing red indicates low CO alarm condition along with four beeps then off for five seconds. The alarm will sound and can be reset by the Test/ Reset button. The CO detector has detected the presence of 60 ppm.
- Steady red indicates a CO alarm condition. The detector has sensed the presence of levels over 100 ppm of Carbon Monoxide. The alarm will sound continuously until the Reset switch is reset.
- Alternating red and green indicates a malfunctioning alarm.

Alarm

If the alarm sounds, have the detector and the motorhome checked by an authorized service technician as soon as possible. Never disconnect a CO detector to silence an annoying alarm. Evacuate the motorhome immediately when the red light is lit and the alarm sounds. Do a head count to check that all persons are accounted for. Call the nearest fire department and ask them to determine the source of the Carbon Monoxide. Do not re-enter the motorhome until it has been aired out and the problem corrected.

Potential Sources of CO in the motorhome:

- Engine Exhaust
- Portable Grills
- Portable Space Heaters
- Camp Fires
- Gas Stoves and Ovens
- Generator Exhaust
- Portable Generators
- Nearby Motorhomes
- Defective Engine Exhaust System

Testing

Test Procedures:

Test the Carbon Monoxide detector operation after the motorhome has been in storage, before each trip and at least once a week during use. Test by holding the Test/Reset button in until the alarm sounds four beeps and the indicator lamp is steady red. Six seconds later the alarm will again beep four times and the indicator light goes steady green.

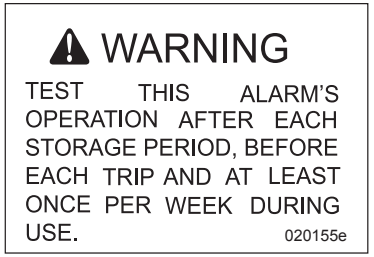

Peak Level Memory:

The CO detector has the capability to remember the level of Carbon Monoxide that activated the alarm.

Press the Test/Reset button for less than one second and observe the visual and audible signals.

- One beep and one green flash indicate memory is clear.
- Two beeps and two red flashes indicate less than 100 ppm.
- Three beeps and three red flashes indicate less than 200 ppm.
- Four beeps and four red flashes indicate greater than 200 ppm.

NOTE:
Memory is erased when power is disconnected for 15 seconds.

Cleaning & Maintenance

Use a vacuum cleaner to remove dust or any other buildup on the detector. **Do not** wash. Wipe the detector with a damp cloth and dry with a towel. Do not open the detector for cleaning. Do not paint the detector. It is recommend that the Carbon Monoxide detector be replaced every five years.

The CO detector has no user service parts. If there is a problem with the detector refer to an authorized service center. **Do not remove power**.

INSPECTION:
Test the CO detector weekly and at the beginning and end of each trip.

FIRE EXTINGUISHER

The fire extinguisher in the motorhome is located near the main entrance door. Please read the operating instructions printed on the fire extinguisher. If there is any doubt on how to operate the fire extinguisher practice using it. Replace or recharge the extinguisher immediately after use.

Maintenance

Inspect the fire extinguisher at least once a month. Inspect more frequently if the extinguisher is exposed to weather or possible tampering. Do not test the extinguisher by partially discharging. Internal pressure will escape and the fire extinguisher will need to be replaced.

Use the PASS method:
Pull the pin. Hold extinguisher upright.

Aim at the base (bottom) of the fire and stand six feet away.

Squeeze the lever to discharge the agent.

Sweep the spray side to side until fire is totally extinguished.

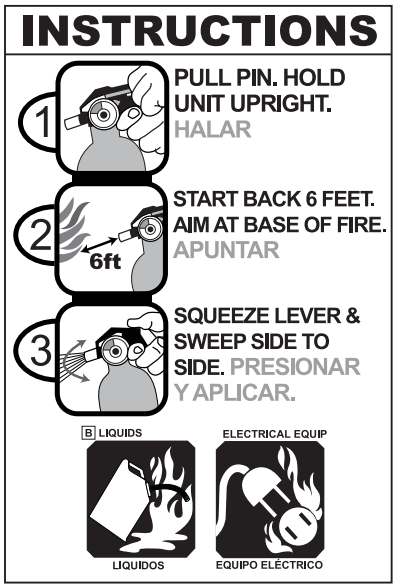

020283b

WARNING:
Road vibration will cause extinguisher powder to compact and may cause extinguisher malfunction. Invert and shake extinguisher monthly.

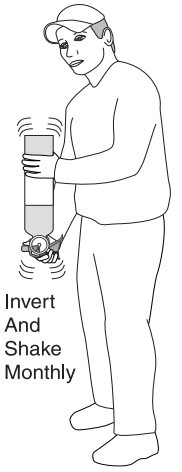

020261

Three classes of fire can occur in a motorhome. Any fire can fall into more than one class; a fire that involves both burning paper and kitchen grease is a Class AB fire.

Classes of Fire:

A - Fires that are fueled by materials that leave a residue when they burn: paper, wood, cloth, rubber, and certain plastics.

B - Fires that involve flammable liquids and gases: gasoline, paint thinner, kitchen grease, propane and acetylene.

C - Fires that involve energized electrical wiring or equipment. If electricity to the equipment is turned off, a class C fire becomes one of the other two class fires.

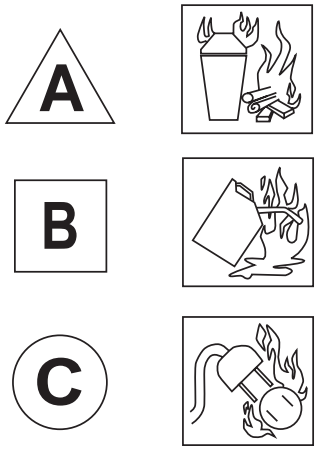

100209

ESCAPE (EGRESS) WINDOW

The Egress window, designated for use as an emergency exit, is identified inside of the motorhome by a red locking handle and Exit label.



080427m

To Operate:

- To open, lift the red handle and push window outward.
- To lock, pull window closed and lower handles to lock.

Hinges along the outside window top identify the Egress window on the motorhome exterior. The glass slider in the Egress window operates the same as all other windows in the motorhome.

Maintenance:

- Occasionally open and close the Egress window to prevent the rubber seal from sticking.

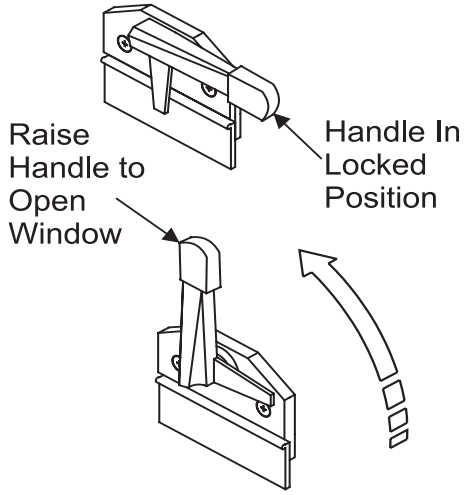

Egress Window Handle
020029

Interior and Exterior Care

Section 3

EXTERIOR CARE....56
Corrosion....56
Winter Drive Protection....56
Washing....57
Drying....57
Waxing....57
Paint Codes....58
Tire Care....58
Bright Metal....58
Wheels - Polished Aluminum....59
EXTERIOR MAINTENANCE....59
Fiberglass....59
Roof Care & Seal Inspections....60
Sealant Types....60
INTERIOR CARE....61
Cockpit....61
FABRICS....62
General Care & Cleaning....62
Vinyl....62
Optima Leather & "O" Vinyl....63
Ultra-Leather....64
FLOORS....64
Carpet Cleaning....64
Laminate Floor....65
Tile Floor....66
SHOWER....66
CEILING....67
WALL COVERINGS....67
WOOD CARE....67
COUNTERTOPS....69
Solid Surface....69
Repairing Cuts and Scratches....69
Laminate....70
STAINLESS STEEL SURFACES....70
WINDOWS....70
Condensation....70
WINDOW TREATMENTS....71
Mini-Blinds....71
Day/Night Shades....71
MOLD & MILDEW....71
PEST CONTROL....72
STORAGE....75
Short Term....75
Long Term....75
Winter Storage Checklist....77
Removal from Storage....77

INFORMATION:
This section is on general cleaning and maintenance. Some of the articles within "Exterior & Interior Care - Section 3" may not apply to all models. Improper or inadequate maintenance may affect your warranty coverage. Please review this section carefully. For more information, see the terms and conditions of the Limited Warranty in the front of this Manual.

EXTERIOR CARE

Corrosion

The most common cause of corrosion to the motorhome exterior is accumulation of road salt, grime and dirt. These elements, combined with moisture, may possibly cause early component failure. The undercarriage, around wheel openings and the radiator charge air cooler package require periodic cleaning to prevent component failure caused from corrosive materials collected on roadways.

If the motorhome is stored or driven in areas where road salts are used or near the ocean, it should be washed at least once a week, including the undercarriage. Otherwise, it is recommended to hose off the undercarriage area at least once a month to help minimize the corrosion process.

High-pressure washers or steam cleaners are the most effective way of cleaning the undercarriage and inside wheel openings. However, these devices can cause damage if used improperly. Avoid spraying directly at the painted surface with a high-pressure washer of any type. Also avoid spraying electrical wiring, connectors or electro-mechanical components with high pressure.

CAUTION:
It is up to the motorhome owner to properly wash and protect the motorhome and its components from corrosion. Sources of corrosion can come from road surfaces treated with de-icing agents or atmospheric conditions such as coastal regions.

CAUTION:
Exercise caution when cleaning the radiator charge air cooler package. Damage to the fins can result when using a high-pressure washer or steam cleaner. The nozzle discharge pressure of these devices can exceed 1800 psi. Also avoid using high-pressure/high-temperature steam cleaners on the exterior paint surfaces. Remove all spattered washing debris from the exterior paint surfaces as soon as possible.

Winter Drive Protection

Various substances and chemicals are applied to roadways to reduce hazardous winter driving conditions. These substances can include rock salt, sand, gravel or chemical applications such as LMC (Liquid Magnesium Chloride).

Road salts are known for their corrosive properties to steel and other metals. Road salt can also damage other vehicle components and materials. Vehicles located in or traveling through areas where road salt is used are subject to rapid corrosion. LMC is a moisture activated chemical applied directly to the road surface for the purpose of lowering the freeze point of water. According to published information, LMC is a suitable replacement for road salt or sanding.

The draw back is LMC is highly corrosive to all metals, plastics and can even destroy rebar embedded inside concrete. After application, road traffic will cause LMC to become airborne vapor traveling as much as 2000 feet from the point of origin. Vehicles located within that distance, even when stored outside, are exposed to the same corrosive affects as vehicles traveling over a road treated with LMC. LMC lowers the freeze point allowing moisture to further penetrate surfaces, and remains active down to 27% humidity. Foot traffic will also track road salt and LMC into living spaces.

While most sand, road salt and LMC accumulation can be washed away through use of a high-pressure washer, road salt and LMC is still bonded to all exposed surfaces including paint. Only chemical washing can neutralize road salts or LMC. However, chemical washing can only neutralize open surfaces. LMC and road salt remains trapped between mating surfaces and will corrode wiring as well.

Local or state governments determine what is applied during winter months and substances can change by location. It is possible to encounter one or all of these substances while driving. Only regular weekly washing of the exterior and undercarriage can slow corrosion during the winter months. No single treatment can be used to eliminate and neutralize the affects of these corrosive substances.

Diligent washing and awareness of what substances applied to the road surface will dictate if a neutralizing agent must be applied to help slow the process of corrosion to exterior surfaces including the paint finish.

Therefore; it is up to the motorhome owner to perform regular washing maintenance and neutralize any corrosive agent applied to the roadway by local or state governments.

Washing

The motorhome is painted with a "base coat, clear coat system." Clear coat is a polyurethane-based material which brings out the shine and luster to the base coat paint. Periodic cleaning will help to preserve the paint finish. Care should be used when washing the motorhome. Use only mild detergents or (preferred) specifically designed automotive detergents. Avoid abrasive cleansers or laundry detergents that will scratch the clear coat and leave a soap film. Use a soft cotton cloth or specially designed microfiber and/or wool washing mitt to wash the paint finish. Avoid brushes as they can scratch the surface and damage the paint. Before washing the motorhome, remove most of the accumulated dirt and road wash behind wheel openings, below the windshield and on the rear of the motorhome. If build up is excessive, run water over a soft cotton cloth while gently wiping the surface in one direction. This will help float away the "build-up" from the clear coat. Avoid back and forth or circular motions as this may act like sandpaper, scratching the clear coat and leaving a haze or swirl marks.

After removing the heavy build-up, use the mixed detergent solution to wash the motorhome. Start washing at the top of the motorhome working towards the bottom. If possible, wash the motorhome in a shaded area when the exterior is not hot to the touch.

If necessary, turn the motorhome around to keep the area being washed in the shade. Try not to allow the detergent to dry onto the clear coat surface. Use plenty of water when rinsing the surface to remove all detergent residue.

Drying

Chamois cloths come in natural and synthetic materials. Either type is acceptable as long as the surface is clean. Soak the chamois in clean water, then wring it dry. Remove the water from the surface, starting at the top and working towards the bottom, using a downward "S" pattern. Wring out the chamois as needed. Using a chamois cloth to remove the rinse water is not necessary, but the effort can be worthwhile.

Waxing

It is recommended to wax the motorhome twice a year: spring and fall. Many types of protective barriers are available today that may be applied to the clear coat: glazes, waxes, polishes, rubbing compounds or combinations of these products.

NOTE:
Use a grease and wax remover before applying another coat of wax. Chemicals can become trapped between layers of wax, possibly damaging the paint finish.

INFORMATION:
When selecting a product, follow the product manufacturer's recommended application instructions.

Types of Products:

Glazes - Glazes are generally used to fill very fine scratches in the clear coat. They are applied either by hand or by using a polisher with a special pad.

Waxes - Waxes come in many types of chemical make-up. Most contain cleaning agents, lubricants and wax. Cleaning agents remove oxidation and leave a high gloss. Wax leaves a clear film that protects the finish

NOTE:
Recommended waxes are Menzerna FMJ (Full Molecular Jacket) or Meguiars NXT Generation Tech Wax 2.0.

Polishes - Polishes combine wax based substances with abrasives to clean and polish at the same time. These products can be too abrasive for clear coats and are not recommended for use.

Rubbing Compounds - These types of products are generally applied by using a buffer. The use of rubbing compounds should be left to professionals as undesired results can quickly occur. These types of products are generally used to correct or flatten a surface by removing high spots or small amounts of material.

When selecting a product, the container should be marked, “safe for clear coats” or “clear coat safe.” Carefully follow the application instructions when using a product. Upon first use of a product, try it on a small test spot in an inconspicuous area in case an undesired reaction occurs.

Observe the test area from different angles to check for hazing or swirl marks. If an abnormal reaction to the finish occurs, discontinue product use and consult the product manufacturer. If the product is a paste, **do not** allow dried paste to be baked on by the sun. Remove paste shortly after drying. Clean, dry, 100% cotton cloths are best suited for the removal of dried paste. Turn the cloth often. Use a separate clean cloth to buff. The surface should feel slick when rubbing the cloth lightly over it. Avoid repeated wax applications which can cause build up. Some very fine scratches or swirl marks may be removed by application of a glaze. These types of glazes fill the scratches or swirl marks.

The motorhome has a large surface area. Washing and waxing may not be completed in one afternoon. Select sections to wax until the motorhome is complete. If the task seems overwhelming, have an RV detailer perform the task.

Paint Codes

The motorhome color scheme is comprised of specific paint colors, each assigned a code used to achieve a desired color of paint. “Touch-up” paint may be used to repair a small scratch or imperfection in the paint surface. To paint a larger area, it is necessary to obtain the paint code to get the correct color match.

To Obtain the Paint Code:

- Contact **Parts** at **1-877-466-6226**.
- Specify the year, model, serial number and exterior color scheme name (if known).
- This formula can be mixed at a local Sherwin Williams paint store.

NOTE:
Paint codes are also listed on touch-up paint kits included with the motorhome.

NOTE:
All special paint schemes require contacting Monaco RV LLC directly for paint codes.

Tire Care

Proper care and methods in cleaning must be used to obtain the maximum service years out of the tires. Use a soft brush and a mild detergent to clean the tires. If a dressing product is used to “protect” the tires from aging, use extra care and caution. Tire dressings that contain petroleum products or alcohol may cause deterioration or cracking.

In many cases it is not the dressing that causes a problem but the chemical reaction that subsequently occurs. When these same dressing products are used on a passenger car tire that is replaced every three to four years, it is rare to see a major problem. However, in most cases motorhome tires may last longer due to limited annual mileage and exposure.

Bright Metal

All chrome and stainless steel should be washed and cleaned each time the motorhome is washed. Use only automotive approved non-abrasive cleaners and polishes on exterior bright work. Do not use rubbing compounds. Do not use abrasive cleaners or compounds to clean the mirrors.

NOTE:
When applying chemicals to remove road tar, use only automotive products that are recommended for painted surfaces and fiberglass. Observe the warning recommendations and directions printed on the container.

Wheels - Polished Aluminum

Outside:

The outward side of the aluminum wheel is a polished finish and should be treated the same as the paint finish on the motorhome. Road soils, grime and brake dust trap moisture which can cause corrosion over a period of time.

1. Frequently clean using high-pressure water.
2. Wash with a 100% cotton cloth and a mild soap solution (dish soap or car wash soap is recommended).
3. Rinse all remaining soap residue with high-pressure water and wipe the surface dry using a 100% cotton cloth to avoid water spots.
4. A secondary hand washing may be required to remove some stubborn road films.
5. Carnauba wax can be applied to help protect the finish.

CAUTION:
Rinse aluminum wheels using high-pressure water to remove debris from the surface before washing. Do not scrub. Rubbing debris against the surface of the wheel can result in scratches. Do not allow soap solution to dry on the finish of the wheel as spotting will occur.

NOTE:
Allow heated wheels that are extremely hot to cool before spraying with cold water.

Do not use the following items on polished aluminum wheels:

- Synthetic cleaning pads, wire or abrasive brushes, steel wool or scouring pads (these can mar or scratch the finish).
- Strong detergents, alkaline or acidic cleaners, acids or lye-based chemical products or solvents.

Inside:

If the tires are removed, inspect and clean the entire rim. Air used to fill the tire may contain moisture and can cause the areas of the wheel under the tire to severely corrode.

Use a soft brush to remove foreign material from the tire side of the rim. Lubricate the rim and tire bead with a non-water-based lubricant before mounting the tire and ensure the inside of tire is dry before installing.

WARNING:
Do not use a flammable solution to coat the inside of the rim. This can lead to an explosion during tire inflation or in subsequent operation of the motorhome.

EXTERIOR MAINTENANCE

The motorhome is exposed to extreme temperatures, humidity, ultraviolet rays, rain and other environmental conditions. While in operation the motorhome is subject to twisting and flexing caused by rough roads, potholes and winding mountain roads. Maintenance is necessary not only to keep the exterior looking nice but also to keep it in proper working order.

Fiberglass

Inspect the fiberglass exterior. Periodic **inspection** may reveal that flexing of the fiberglass exterior has created imperfections in the surface commonly known as “spider” or “hairline” cracks. A crack that has opened up to reveal the cloth weave threatens the integrity of the fiberglass. If the exterior exhibits signs of damage, prevent moisture penetration, particularly in freezing climates. Cover the area using plastic sheeting and/or tape, and have the damaged fiberglass repaired as soon as possible.

Roof Care & Seal Inspections

Wherever there is something affixed to the motorhome, such as the "beltline" or vent attached on the roof, there is a seal preventing water intrusion.

There are many types of sealants and each has a specific use. While the beltline uses a silicone or urethane base sealant to prevent water intrusion, roof openings use an acrylic based sealant. Moisture intrusion can occur at any time for a number of reasons. Therefore, regular sealant inspection and maintenance will greatly reduce the likelihood of moisture intrusion and costly repairs.

The motorhome is sealed at the factory. However, extreme weather conditions can shorten the life of the sealant. Harsh road conditions can compromise sealant integrity. Maintaining sealant is part of regular motorhome maintenance. Inspect all joints, seams and openings at least once every six months. While sealant integrity may appear fine, a small void under the right conditions can quickly cause major damage. Make a full interior inspection for signs of moisture intrusion every two weeks if the motorhome is in storage.

CAUTION:
Inspect exterior seals, seams and joints for sealant integrity at least twice a year. Make a full interior inspection for water leaks every two weeks while the motorhome is in storage.

INSPECTION:
Surface must be clean and dry. Inspect seal for voids, cracks, bubbling, peeling or pulling away. Sealant that looks fine without imperfections is acceptable for continued service. Sealant that is old, cracking, flaking or bubbling will allow moisture intrusion and must be repaired.

WARNING:
Inspecting sealant will require use of a ladder or scaffold assembly. Roof access is also required. Follow proper safety measures accordingly. Exercise extreme care whenever using a ladder/ scaffold assembly. Avoid getting on the roof if it is icy or moisture laden as the surface can be very slick. Use judgment if inspection is considered dangerous. Have the motorhome inspected or sealed (if necessary) by a qualified service technician.

Sealant Replacement:

Carefully remove sealant that is cracking, flaking, bubbling, peeling or pulling away from the surface. The area under the removed sealant will need to be clean and dry before applying new sealant. Applying new sealant over a dirty or moisture laden surface will not allow proper adhesion. Sealant application may require simple hand tools and paper towels or rags for cleanup. Some sealants may be labeled hazardous or require chemicals for cleanup. Follow all of the manufacturer's warnings and precautions when dealing with these substances.

WARNING:
Some sealants may be labeled hazardous or require use of petroleum distillates for cleanup. Use proper precautions as suggested by the sealant or chemical manufacturer. Use of protective eye wear, gloves, respirator or open ventilation may be required. Use judgment when working with chemicals. If health limits exposure to chemicals or inhibits skills or abilities, employ a qualified service technician to perform the tasks.

Sealant Types

Roof: Manus-Bond/API Polyurethane

This product is used for large roof openings such as around vents, skylights, any roof mounted antennas and ladder roof mounts. Clean the old sealant that is lifting before applying the new. Make sure the roof is dry and free of dirt. Care should be used when near an edge or roof corners as the product will spread out. Apply masking tape around the area to avoid runs.

WARNING:
Consult manufacturer data for application and safety instructions.

Roof Air Conditioner:

Roof air conditioners use a closed cell foam base gasket. No sealants are required. The roof air conditioners should be checked for tightness by the four mounting bolts located in each interior corner of the air conditioner roof opening. Torque specification is 40 to 50 in/lbs. The base gasket should be compressed to about ½".

Exterior Attachments: Silicone

Primarily used on the sidewalls around windows, doors, handles, beltline molding, latches and bases of surface mounted items such as clearance lights. Old peeling sealant should be removed with nylon sticks or equivalent. Avoid using metal utensils that can scratch the painted surface. Use nylon sticks or equivalent. Avoid lacquer thinners or ketone based solvents as these chemicals can damage painted surfaces. Confirm that surface is clean and dry before a new application. Cut the tube at an angle with the smallest usable opening. Avoid a heavy bead as a little goes a long way. Use a finger at a 45° angle on the beaded surface to smooth out product. Do not moisten finger, use a disposable latex glove.

Keep rags or paper towels handy for clean up. Use care when applying silicone and plan ahead before starting a bead. Look for obstacles that may impede application.

Undercarriage: Spray Foam

This product is used as a sealant where a hole has been made for items such as water lines or wires that are coming through a floor or bulkhead opening. Consult manufacturer data for application and safety instructions.

Windshield: Black Polyurethane

Used for sealing the windshields not to fill holes or other imperfections. Product comes in a tube and applies much the same way as silicone. Clean up using solvents such as paint thinner. Gloves are required as product is considered hazardous.

Installing the windshield is a 3-step process using the following materials:

- Sika Primer 206
- Sika Aktivator
- Sika Adhesive 255FC

WARNING:
Avoid eye and skin contact and breathing of vapors. Consult manufacturer data for application and safety instructions.

Painted Surface: Acrylic Sealants

Used where items are sealed under a painted surface such as the metal corners of slideout rooms and roof mounted awning brackets. The material is specially formulated to allow paint adhesion. Consult manufacturer data for application and safety instructions.

INTERIOR CARE

Cockpit

The dashboard is a molded assembly that is vinyl wrapped. The instrument panel is comprised of various gauges and switches. The dashboard and instrument panel have different cleaning requirements. Clean the vinyl wrapped dashboard following the instructions under ***"Vinyl"*** in this section. If a blemish or small cut occurs in the vinyl, contact a professional upholstery repair service.

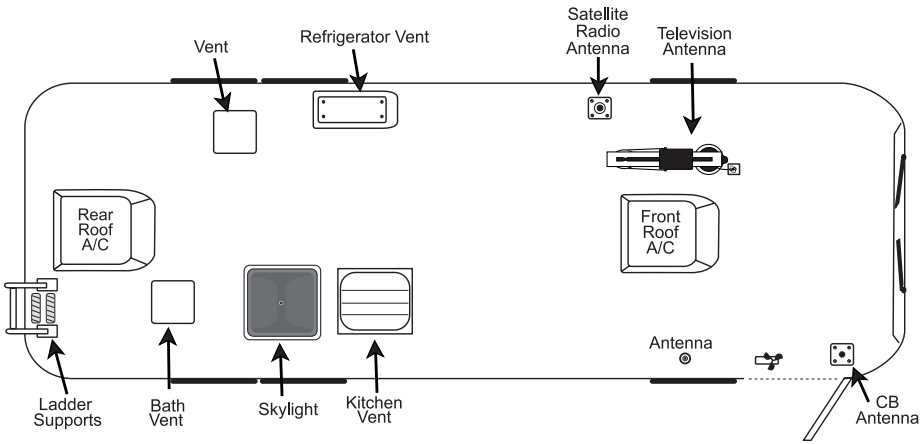

Typical roof layout

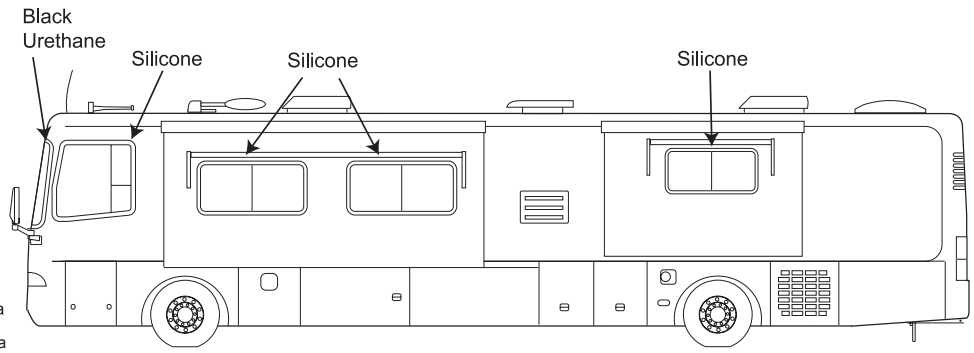

Typical side view

Clean plastic or Plexiglas® instrument panels with a cloth dampened with a mild soap and water solution. Dry using a separate cotton cloth. Plastic polish products that can help brighten the appearance of plastic or Plexiglas instrument panels are *Novus Plastic Care*®, a three-part system; *Meguires*® and *Johnson Paste Wax*®. These products will require buffing and rubbing. Only glass lens gauges can be cleaned using glass cleaner. Spray cleaner on the cloth, not directly onto the lens to prevent overspray or runoff.

CAUTION:
Do not use glass cleaner on plastic or Plexiglass surfaces. Most glass cleaners will haze plastic finishes and cause brittleness.

TIP:
To determine if a lens is glass or plastic, tap the lens with a fingernail. Plastic lens will have a dull hollow sound whereas glass will have a clear ping sound.

FABRICS
General Care & Cleaning

Use care when the motorhome is exposed to high-humidity climates for an extended period. Protect fabrics from prolonged exposure to moisture to prevent mold. Cover all upholstery and make sure window coverings are down to protect fabrics from sun damage. Frequently used items require more attention than those items not regularly used.

If a spill occurs, blot the moisture as quickly as possible. Do not use soap and hot water as this may set a stain. Clean the spot as soon as possible.

Cleaning Upholstery Fabrics:
- Water-based cleaners are not recommended.
- If a spill does occur, blot the soiled area, do not rub it.
- Some solvents may have an adverse reaction on the backing of the upholstery fabric and is not recommended.
- To prevent overall soiling, frequently vacuum or lightly brush to remove dust and grime.
- Clean spots using a mild water-free solvent or dry cleaning product.
- Clean only in a well ventilated area and avoid any product containing carbon tetrachloride or other toxic materials.
- Use a professional furniture cleaning service for overall cleaning.

Vinyl

Several areas of the motorhome, such as the dash, ceiling and items of furniture, may be covered in vinyl. The care and cleaning of these areas are as follows:

Normal Cleaning:
Most common stains can be cleaned using warm soapy water and a clear water (distilled water preferred) rinse. Moderate scrubbing with a medium bristle brush will help to loosen soil from the depression of embossed surfaces.

For stubborn stains use the following commercially available mild detergents in accordance with the manufacturer's instructions: *Mr. Clean* or *Fantastik*®.

Full strength rubbing alcohol or mineral spirits may be tried cautiously as a last resort on very stubborn stains if the above suggestions do not work. Indiscriminate use of any solvent or solvent containing cleaner can severely damage or discolor the vinyl. Stains may become permanent if not immediately removed.

NOTE:
Detergents should never be used on a regular or repeated basis for normal cleaning.

CAUTION:
Powdered cleaners containing abrasives, steel wool and industrial strength cleaners are not recommended for vinyl.

Bird Excreta & Vomit Stains:
Sponge the area with a soapy water and diluted bleach solution until stain is removed. Rinse thoroughly with clean water.

Urine Stains:
Sponge with soapy water containing a small amount of household ammonia. Rinse thoroughly with clean water.

Surface Mildew:
Wash with diluted bleach and use a soft brush for stubborn growth. Rinse repeatedly with clear, cold water.

Ballpoint Ink:
Wipe the stain immediately with rubbing alcohol in a well ventilated area.

WARNING:
If flammable solvents such as alcohol, turpentine or varsol are used for cleaning, use only small quantities while in a well-ventilated area. Exercise proper caution by notifying any persons in the area. Keep away from any ignition source. Always wear protective gloves.

Latex Paint:
Wipe fresh paint off with a damp cloth. Hot soapy water will normally remove dried latex.

Oil-Base Paint:
Use turpentine in a well ventilated area to remove any fresh paint. Dried paint must be moistened using a semi-solid, gel-type stripper. The softened paint can be gently scraped away. Rinse with soap and water.

CAUTION:
Lacquer solvent will cause immediate irreparable damage to the vinyl. Do not use wax on vinyl upholstery as it will cause premature embrittlement and cracking. Dilute chlorine bleach before using. Never use full strength bleach. Paint strippers will remove the print pattern and damage the vinyl if it comes in direct contact.

Tar or Asphalt:
Remove immediately. Prolonged contact will result in a permanent stain. Use a cloth lightly dampened with mineral spirits and rub the stain gently, working from the outer edge of the stain toward the center to prevent spreading. Rinse with soap and water.

Crayon, Mustard or Ketchup:
Sponge with mild soap and water. For stubborn stains that have set, use a cloth soaked in diluted mild detergent with gentle rubbing. Any remaining stain should be washed with diluted bleach. Rinse repeatedly with cold water.

Candy, Ice Cream, Coffee, Tea, Fruit Stains, Liquor, Wine, Tanning Lotion or Soft Drinks:
Loose material should be gently scraped with a dull knife. Use lukewarm water and sponge repeatedly. Any soiled area that remains after drying should be gently rubbed with a cloth or dampened with a mild detergent solution. Rinse thoroughly with clean water.

Chewing Gum:
Scrape off as much gum as possible using a dull knife. Rub the gum with an ice cube to harden and for easier removal. In a well ventilated area, use a cloth saturated with mineral spirits and gently rub the remaining gum. Rinse thoroughly with clean water.

Lipstick, Grease, Oil, Make-Up or Shoe Polish:
Apply a small amount of mineral spirits with a cloth. Rub gently. Be careful not to spread the stain by smearing beyond the original source. Remove shoe polish immediately as it contains a dye that will cause permanent staining. Rinse thoroughly with clean water.

Blood or Plant Residue:
Rub out spots using a clean cloth soaked in cool water. For stubborn spots, use household ammonia and rinse repeatedly with a clean, wet cloth. **Do not** use hot water or soap suds as this will set the stain.

TIP:
Vinyl requires periodic cleaning to maintain its appearance and to prevent the buildup of dirt and contaminants that may permanently stain or reduce the life of the vinyl if left untreated. Frequency of cleaning and procedures used depend upon the amount of use and the environmental conditions in which the vinyl is subjected.

NOTE:
Tears or holes in the vinyl can be temporarily covered with clear tape to prevent further damage. Repairs should be made by a professional upholstery shop. Commercial repair products may contain lacquers and cause the vinyl to become brittle and more difficult to repair.

Optima Leather & "O" Vinyl

Cleaning Suggestions:
Follow cleaning steps in sequence. Each subsequent step is to be used if the previous step was not successful. Clean area with warm water after each process.

For General Cleaning:
Wipe the soiled area with warm water, a mild detergent soap, and a soft cotton cloth.

For Oil-based Stains:
Spray soiled area with household cleaner, such as *409*® or *Fantastik*®, and wipe with warm water using a soft cotton cloth.

For Marker-type Stains:
Dab stained area with solution of 50% Isopropyl Alcohol and 50% warm water using a soft cotton cloth.

WARNING:
Avoid open flames or hot lighting when using an alcohol solution.

CAUTION:
Do not use any abrasive cleaner with this material.

NOTE:
A five parts water to one part bleach solution is recommended for disinfecting.

Ultra-Leather

Care Instructions:
- Spot clean with mild soap and water.
- Air dry or dry quickly with warm setting of a hair dryer.
- For stubborn stains, use mild solvent.
- For tougher stains, try Fantastik® brand spray cleaner. Disinfect with a 5:1 non-chlorinated (only) bleach solution.
- Dry clean using commercial dry cleaning solvents only.
- Use a mild detergent for:
  - Red Wine, Liquor, Coffee, Tea, Cola, Milk
  - Ketchup, Mustard, Mayonnaise, Steak Sauce, Soy Sauce
  - Butter, Salad Oil, Chocolate, Lipstick, Make-up, Face Cream
  - Suntan Oil, Machine Oil, Urine, Blood

Removing ballpoint pen stains:
Wipe the stain off with ethanol (ethyl alcohol). Follow all manufacturer safety instructions when using chemicals.

Use the following procedure if stain the remains:
- Dilute household bleach (sodium hypochlorite) with the same amount of water. (One part to one part solution.)
- Apply the bleach/water solution to a piece of tissue (do not apply too much). Place the tissue on the stained surface and cover it with polyethylene film to prevent the solution from drying.
- Periodically remove the tissues to check on the condition of the stain. When the stain is almost gone, remove the tissues completely. Do not leave on for more than one hour.
- Wash the stain with sufficient amount of clean water.

CAUTION:
If bleach residue remains, the polyurethane resin and back cloth will yellow and deteriorate.

To Neutralize Bleach:
- Place a piece of tissue, as in Step 2, and apply hydrogen peroxide solution (15%).
- Leave the solution on for approximately 30 minutes then remove the tissue.
- Completely remove the residue of hydrogen peroxide on the Ultra-leather with water.

Bleach is the only chemical that will remove ballpoint pen stains. However, this may cause polyurethane to yellow or the back cloth to deteriorate. It is recommended to remove ballpoint pen stains as early as possible with ethanol.

FLOORS

Carpet Cleaning

Spot Removal Procedures:
- Act quickly when anything is dropped or spilled. Remove spots before they dry.
- Blot liquids with a clean, white absorbent cloth or paper towel.
- For semi-solids, scoop up with a rounded spoon.
- For solids, break up and vacuum out as much as possible.
- Pre-test the spot removal agent in an inconspicuous area to make certain it will not damage the carpet dyes.
- Apply a small amount of the cleaning solution recommended for the particular spot. Do not scrub. Work from the edges of the spot to the center. Blot thoroughly. Repeat until spot is removed.

- Follow steps on the Carpet Spot Removal Guide.
- After each application, absorb as much as possible before proceeding to the next step.
- Absorb remaining moisture with layers of white paper towels, weighted down with a non-staining glass or ceramic object.
- When completely dry, vacuum or brush the pile to restore texture.
- If the spot is not completely removed, contact a professional carpet cleaner.

Cleaning Solutions:

A. Dry Cleaning Fluid: A non-flammable spot removal liquid, available in grocery and hardware stores.

B. Nail Polish Remover: Any acetate, that often has a banana fragrance. Do not use if it contains acetone.

C. Detergent Solution: Mix two cups of cold water and 1/8 teaspoon mild liquid detergent (no lanolin, non-bleach).

D. Warm Water: Lukewarm tap water.

E. Vinegar Solution: One cup white vinegar to one cup water.

F. Ammonia Solution: One tablespoon household ammonia to one cup water.

G. Stain Removal Kit: Available from retail carpet stores or professional cleaners.

H. Call Professional: Additional suggestions, special cleaning chemicals or the ability to patch the area may be available.

Use the solution specified in order from 1-8 until stain is removed.	A DRY CLEANING FLUID	B NAIL POLISH REMOVER	C DETERGENT SOLUTION	D WARM WATER	E VINEGAR SOLUTION	F AMMONIA SOLUTION	G STAIN REMOVAL KIT	H CALL PROFESSIONAL	I PERMANENT CHANGE
SPOTS									
Acid				2		1		3	*
Acne Medication		1		2	5	4	3	6	*
Alcoholic Beverage			1	4	3	2			*
Ammonia				2	1				*
Bleach		1	2					3	*
Blood		1	3		2	4			
Candle Wax	1					2			
Cement & Glue	2	1	3		5	4	6		*
Chalk		1	2						
Charcoal		1	2						
Chewing Gum	1								
Coffee			1	3	2		4	5	*
Cosmetics		2	1	3	6	5	4	7	*
Crayon	1		2	3					
Drain/Toilet Cleaner			2	1	3			4	*
Dye	1		2		4	3	5	6	*
Food			1	4	3	2	5	6	*
Fungicides, Insecticides, Pesticides	1		2	5	4	3	6	*	
Furniture Polish (Water Based)			1	4	3	2	5	6	*
Furniture Polish (Solvent Based)	2	1	3	6	5	4	7	8	*
Furniture Stain	2	1	3	6	5	4	7	8	*
Graphite		1	2						
Grease	1	2	3				4	5	*
Ink	2	1	3	6	5	4	7	8	*
Iodine	1		2	5	4	3	6	7	*
Lipstick	2	1	3	6	5	4	7	8	*
Medicine	2	1	3	6	5	4	7	8	*
Merthiolate			1	4	3	2	5	6	*
Nail Polish	2	1	3				4	5	*
Oil	1		2	4		3		5	*
Paint	2	1	3				4	5	*
Plant Food			1	4	3	2	5	6	*
Rust			2	3	1		4	5	*
Shoe Polish	2	1	3	5		4	6	7	*
Soft Drinks			1	4	3	2	5	6	*
Soot	1		2	3				4	*
Tar	1						2	3	*
Toothpaste			1						
Urine			1		2		3	4	*
Vomit			1	4	3	2	5	6	*

* While recommended cleaning agents are effective, some stains may become permanent.

I. Permanent Change: Due to the nature of the stain, there may be color loss. The carpet has been permanently dyed or the carpet yarns have been permanently damaged.

NOTE:
While the recommended cleaning agents have proven to be effective, some stains may become permanent.

Laminate Floor

Laminate flooring used in the motorhome provides style, durability and ease of maintenance.

Laminate flooring is constructed of three main material components. The surface, similar to many countertops, contains aluminum oxide particles to form an extremely hard, durable outer layer. The carrier (core layer) is constructed from high-density fiberboard. A tongue and groove design provides a tighter bond. The backer (bottom layer) is also made of laminate for strength.

Cleaning and Maintenance:

For everyday cleaning, vacuum the floor to remove dirt and debris. It is recommended to occasionally mop the floor using a cotton string mop and a minimal amount of water. Use a mixture of soap-free household cleaner (either vinegar or ammonia work well) and water for a more thorough cleaning.

Tile Floor

Tile floors vary in porosity and surface irregularities. Regular maintenance is important to keep the tile in the motorhome looking showroom new. Once the slideout has been extended, keep the tile floor clean to prevent dirt from scratching the tiles prior to retracting the slideout.

NOTE:
Tile is ceramic and will chip or break. Avoid dropping heavy or sharp objects on the tile.

Cleaning Tile:

Use a damp sponge mop or a cloth to clean tile. If moderate staining occurs, cleaning with a window cleaner such as *Windex*® should do the job. A mild solution of hot water and all-purpose cleaner for tile floors, walls and countertops can also be used. Rinse well with clear water and dry with a soft cloth to prevent streaking. Avoid cleaning tile with soap. Soap forms a film to dull the luster. Soap also promotes the growth of mildew and bacteria. Do not use powdered cleaners on unglazed tile floors. Undissolved powder will dull the surface. Grout sealers are available that protect the porous surfaces. If a sealer is used, follow the sealant manufacturer guideline for application. Never use sealers on unglazed tile. With the exception of terra cotta, which may be oiled or waxed, tile does not need to be polished or buffed to maintain its finish.

NOTE:
Before using any solution to clean the tile, check the manufacturer's warning label to ensure safety of the product. If there is any doubt, apply several test patches of the solution in an inconspicuous place to determine product suitability.

Grout:

Grout used is a two part concrete mix and can develop surface cracks over time. Due to flexing of the flooring while driving, this process may accelerate. If the grout requires cleaning, scrub with a plastic brush. Do not use steel wool as small particles may remain and produce unsightly stains.

Sealing the Tile:

Apply sealant to the tile floor and grout to prevent discoloring from soils and spills. One pint should be sufficient to seal the floor. Follow application instructions carefully.

CAUTION:
Sealants can contain petroleum distillate. Open windows, vents and doors to provide adequate airflow during application.

NOTE:
It is recommended to test a small amount of sealant on an inconspicuous area before applying sealant to the entire floor. Avoid getting sealant onto surfaces other than the flooring.

To Apply:

1. Extend slideout room(s) and clean floor. Allow floor and grout to thoroughly dry.
2. Working from rear towards doorway. Apply sealant direct from container onto a cloth towel or broom handle applicator. Grout sealant applicators are available at large hardware stores.
3. Apply sealant per manufacturer instructions. Do not allow sealant to puddle in grout lines. Extra care should be used to make sure all grout has been sealed.
4. Refer to container for cure time.

NOTE:
If a spill occurs before sealant has cured, it may be necessary to clean and additionally treat the area with sealant as needed.

SHOWER

Showers are susceptible to soap build-up. To control mildew growth, spray the shower with household chlorine bleach. Allow it to stand for five minutes, then rinse with clear water. Clean the glass shower doors with window cleaner on a weekly basis to maintain shine. If water spots cannot be removed from glass, rub lightly with the flat edge of a razor blade to remove deposits.

To prevent excessive moisture and a continual growth of mildew, use the shower only with adequate ventilation. The sealant in a regularly used shower should be replaced once a year. To replace sealant, remove the old sealant using a sharp non-metallic instrument. Apply new sealant that can be found at most hardware stores.

CEILING

Hardwood, Vinyl and Decorated Paneling:
Certain cleaning agents will affect the surface on both printed and non-printed vinyl. Use only a mild, non-abrasive detergent and warm water with a soft cloth or sponge to clean. Do not use bleach, alcohol, oil-based spray cleaners or cleaning agents that contain solvents, citrus oil or harsh chemicals.

WALL COVERINGS

Immediately remove solvent based or pigmented substances from wall coverings. Do not use abrasive cleaners containing chlorine bleach or solvents. *Fidelity* and *Jolie* brands are recommended. Always begin with a mild detergent or soap and warm water. To remove normal dirt, clean with a soft sponge. Rinse and wipe dry.

Before applying a cleaner, test the cleaning agent on a small, inconspicuous portion of the wall covering to ensure the cleaner does not affect the color or gloss of the wall covering.

Care for the Tower Wall Covering:
Remove ordinary stains with mild soap and warm water. Sponge on. Rinse well and dry with a soft cloth. To remove ball point pen, blood, lipstick, etc., use a sponge or soft bristle brush and *Formula 409®*, *Fantastik®* or a similar product. Rinse well and dry. Finish cleaning by applying full strength isopropyl alcohol with a sponge or soft brush. Rinse well and dry.

Care for the Satinesque Wall Covering:
Remove stain quickly to minimize the reaction on the wall covering, especially if the stain is solvent-based or pigmented. **Examples:** nail polish, oil, shampoo, lacquer, enamel, paint, ink and lipstick.

Begin cleaning the stain with a mild soap-based detergent; and if necessary, move to a stronger cleaner such as household bleach, liquid household cleaners or rubbing alcohol. Before applying a stronger cleaner, test the cleaning agent on a small inconspicuous portion of the wall covering to ensure the cleaner does not affect the color or gloss of the wall covering.

Specific Stain Type Removal Procedures:
Normal Dirt:
Remove normal dirt using a mild soap or detergent and warm water. Allow it to soak for a few minutes then rub briskly with a cloth or sponge.

Nail Polish, Shellac or Lacquer:
Remove liquid using a dry cloth. Use care not to spread the stain. Quickly clean the remaining stain with rubbing alcohol. Rinse with clean water.

Ink:
Remove immediately by wiping with a cloth dampened in rubbing alcohol. Rinse with clean water.

Chewing Gum:
Rub with an ice cube to cool and harden. Gently pull off the bulk of the gum. Remove remaining gum with rubbing alcohol.

Pencil:
Erase as much of pencil mark as possible. Wipe remaining marks with rubbing alcohol.

Blood, Feces or Urine:
Remove these staining substances as quickly as possible. Wash the stained area with a strong soap. If the stain does not disappear, rinse the soapy area thoroughly with clean water. Mix a solution of 50% water and 50% household bleach. Clean the stained area with the bleach solution. Rinse with clean water.

WOOD CARE

For general cleaning, regularly wipe wood surfaces using a soft cloth lightly dampened with clear warm water. Thoroughly dry to prevent streaking. For stubborn stains, use a clean cloth dampened with a solution of mild non-alkaline soap (dish washing liquid) and water and rinse. Dry thoroughly, buffing in the direction of the wood grain. Never use abrasive cleaners, scouring pads or powdered cleansers. Polishing products used on the solid wood surface depends on individual preference. Always follow product instructions.

Excessive dampness, dryness, heat, or cold can damage solid wood finishes. Sunlight can change the color or age the wood. Never allow moisture or spills to stand, always blot dry immediately. Solvents, alcohol, nail polish and polish removers, as well as harsh cleaners, should not be used on finished wood surfaces.

Minor damage to solid wood surfaces can be repaired quickly and effectively with a bit of hard work, some careful attention to details, and most importantly, the right materials. However, any wood repair or finishing job is best left for a professionally trained individual.

NOTE:
It is important to inform the service technician of any products used for the care and cleaning in the event of wood repairs.

Sanding and Sandpaper:

The following table is a general guide and may vary with wood type. The key to sanding is using the right sandpaper for the repair that is needed. Always sand with the grain.

GRIT	GRADE	USE
80-120	Medium	Smoothing the surface, removing small marks.
150-180	Fine	Final sanding prior to finishing.
220-240	Very Fine	Sanding between coats of sealing.
280-320	Extra Fine	Removing dust spots or marks between finish coats.
360-600	Super Fine	Removing luster or surface blemishes.

Steel Wool:

Abrasive material composed of long steel fibers. Coarser grades are used to remove paint and other finishes; finer grades for polishing or smoothing a finished surface.

Nail Holes and Small Cracks:

Fill nail holes and small cracks with wood putty or dough for unstained woods prior to any sanding. Stained finishes require filling holes and cracks after the stain has been applied. Putty should match the stain closely in color.

TIP:
A little sawdust and wood glue can be used to make putty for end grains.

Scratches and Nicks:

"Quick and simple" rarely describes repairs to stained wood finishes; however, a few tricks used by professional woodworkers can be tried to repair nicks and scratches.

Fixing Scratches in Stained Woodwork:

Light scratches will often disappear when carefully rubbed with furniture polish or paste wax. When scratches appear lighter than the surrounding dark-stained woodwork, it usually means either the scratch goes through the stain into the wood or that the varnish is flaking off. Deeper scratches can be hidden by carefully rubbing with a piece of oily nut meat such as Brazil nut, black walnut or pecan. Be careful to rub the nut meat directly into the scratch to avoid darkening of the surrounding wood. Color the scratch with brown coloring crayon or liquid shoe dye (especially good on walnut).

Always test a procedure on an inconspicuous area on the wood to ensure no damage to the finish occurs.

Staining a Scratch with Iodine:

Mahogany - Use new iodine.
Brown or Cherry Mahogany - Use iodine that has turned dark brown.
Maple - Dilute one part iodine with one part denatured alcohol.

Commercial scratch removers, or stick wax to match the wood finish, can also be used. After the scratch has been hidden, polish or wax the entire area. Deep scratches should be repaired and finished by a professional.

Dents:

Small dents may be repaired by using steam. To raise a small dent, place a damp cloth over the area and hold a medium-hot iron on it. The steam causes the wood fibers to swell back into place. It may be necessary to repeat this process until the dented area is level with the surface. Allow the area to dry.

Restoring the Clear Finish:

The finished surface on the wood is a clear lacquer coating. The lacquer finish can be repaired should the finish become dulled or scratched. Scratches extending into the wood will require wood repair by filling the damaged area. If there is light damage, the wood can be steamed to bring the wood surface level.

Lacquer finish sheen can be restored by carefully using 0000 steel wool or equivalent. Sand damaged lacquer with fine sandpaper. Once the scratched surface is smooth, apply a clear lacquer coating using an aerosol. Lacquer can be applied by cloth or brush, but best results are obtained from an aerosol. If necessary, use 0000 steel wool or equivalent to bring out the luster and smooth overspray.

CAUTION:
Use top coats and finishes in accordance with the manufacturer's safety instructions. Use only in well ventilated areas with proper respiratory filters and masks.

Re-staining the Wood:

If bare wood is visible at the bottom of the scratch, the wood will need to be re-stained. To remove damaged varnish, lightly roughen a small area around the scratch with sandpaper, steel wool or synthetic steel wool. Find a stain that is a shade lighter than the wood finish. Stain the bare wood with a very small amount of stain on a rag, brush or cotton swab. If the color is too light, apply additional coats. Rub away excess stain with a dry rag. If the wood becomes too dark, use a rag moistened in mineral spirits to lighten the wood. Select a lighter color stain and continue. Several companies have simplified this repair process by designing oil-based wood stain into marker-like containers to rub on the scratch. Torn and scratched wood fibers will absorb stain and darken quickly. Start with a stain color that is lighter than the original finish.

A second coat can always be applied if the color of the first coat is too light. Once the color is blended, patch the clear finish as described above and apply a wipe-on finish.

COUNTERTOPS

Solid Surface

Routine Care:

The solid surface countertops have a matte/satin finish. Soapy water or ammonia-based cleaners will remove most dirt and stains from all tops and bowls. Individual techniques may be used to remove different stains. Follow the recommendations below.

NOTE:
Do not cut directly on the solid surface.

Cleaning the Countertops:

Most dirt and stains: Use soapy water or ammonia-based cleaner.

Water marks: Wipe with damp cloth and towel dry.

Difficult stains: Use Soft Scrub® and a gray Scotchbrite® pad. If Scotchbrite is used, buffing may be necessary to restore finish.

Disinfecting: Occasionally wipe surface with diluted household bleach (one part water and one part bleach).

Repairing Cuts and Scratches

Solid surface countertops are renewable. Use the following instructions to repair minor cuts and scratches:

- If scratch or imperfection is deep, sand area with highest grit aluminum oxide sandpaper (220 or finer) to remove the blemish. Never sand in one small area. Feather out lightly at each increase in sandpaper grit to blend restoration.
- Switch from sandpaper to 3M™ # 30 microfinishing film. Apply water while using discs to prevent clogging.
- Work downward to #15 microfinishing film until blemish is gone.
- Buff surface with wool pad and 3M Imperial Compound and Finish Material.

Preventing Heat Damage:

Hot pans and heat-generating appliances, such as frying pans or crock pots, can damage the surface. To prevent heat damage, always use a hot pad or a trivet with rubber feet to protect the surface.

Other Important Tips:

Avoid exposing the solid surface to chemicals such as paint removers or oven cleaners. If these chemicals come in contact with the solid surface, quickly wash with water. Avoid contact with nail polish or nail polish remover. If contact is made, quickly wash with water.

Laminate

Clean laminate countertops with a damp cloth or sponge. Use a spray cleaner to remove stubborn stains. Avoid harsh abrasives, scouring powders, peroxides or bleaches. These products may dull or damage the surface. Avoid contact with dyes, bleaches and indelible inks used on food packages. Do not use laminated countertops as a cutting board. Laminated countertops are resistant to minor heat; however, hot pans, irons and lit cigarettes damage the surface. Use hot pads under pans taken directly from the stovetop.

CAUTION:
Do not cut directly on the laminate surface.

STAINLESS STEEL SURFACES

Stainless steel can be easily damaged by improper cleaners. For example: many liquid cleansers designed to be gentle on smooth surfaces will damage stainless steel. Only use the methods outlined below, and always follow the directions that come with the cleaner (usually located on the bottle).

General Cleaning:
- Use warm, soapy water and dry with a soft, clean cloth.

For Heavy Soiling:
- Only use a stainless steel cleaner designed specifically for appliances.
- Follow all directions from the manufacturer of the cleaner.

Do not use:
- Abrasive powders or cleaners
- Acidic citrus or vinegar based cleaners
- Ammonia
- Steel wool pads
- Abrasive cloths
- Oven cleaners

CAUTION:
Citric acid permanently discolors stainless steel. Immediately remove mustard, tomato juice, marinara or citrus-based sauces or products from stainless steel surfaces.

CAUTION:
Do not cut directly on the stainless steel surface.

WINDOWS

Water Spots:
Glass will develop water spots when not properly cleaned. Water spots are magnified on a reflective finish. Use a squeegee immediately after washing to reduce water spotting. To remove stubborn water stains from reflective glass use *Cerium Oxide Polishing Compound*, made by C.R. Lawrence, available at most glass shops.

Condensation

Condensation develops when water vapor is present in the air. More vapor is added by breathing, bathing, cooking, etc. and collects wherever air space is available. When the temperature reaches dew point, water vapors in the air condense and change to liquid form.

Controlling Moisture Condensation:
Reduce or eliminate interior moisture condensation during cold weather by using the following steps:

- Partially open roof vents and windows to allow outside air to circulate into the interior. Increase ventilation when a large number of people are in the motorhome. Even in damp weather conditions, the air outside will be far drier than the interior air.
- Install a dehumidifier. Continuous use of a dehumidifier is effective in removing excess moisture from interior air. Use of a dehumidifier is not a cure-all, however, it will reduce the amount of outside air needed for ventilation.
- Run the range vent fan when cooking and the bath vent fan (or open the bath vent) when bathing, to reduce water vapor. Avoid excessive boiling or use of steam producing hot water.
- Do not heat the motorhome interior with the range or oven. This increases the risk of toxic fumes and depletes oxygen. Open flames also add moisture to the interior air and increase condensation.
- In very cold weather, leave cabinet and closet doors partially open. Air flow will warm and ventilate the interior storage compartments and exterior walls to reduce or eliminate condensation and prevent the possibility of ice formations.

WINDOW TREATMENTS

Mini-Blinds

Dusting:

Regular dusting will maintain the appearance of the mini-blinds. Keep blinds looking their best by periodically wiping with a soft cloth or a dusting mitt. By tilting the slats down, not quite closed, most of the top surface of each slat can be cleaned. Blinds may be cleaned while hanging in place using this method.

Vacuuming:

For deeper cleaning, vacuum gently with the soft brush attachment of a vacuum cleaner.

Compressed Air or Hair Dryer (non-heat setting):

Blow dust off each slat. Dust is air-borne using this method. Ventilate the motorhome.

Spot-Cleaning:

Spot-clean shades and blinds using a soft cloth or a moistened sponge with lukewarm water. Add mild detergent, if needed. Blot gently to avoid creasing. In a dusty environment, the blinds may need to be cleaned regularly using a sponge or dampened soft cloth. Use warm (not hot) water and a mild detergent that does not contain abrasives. Rinse the blinds using a clean cloth and water to prevent water spots. Place a towel directly under the blinds to absorb water that may drip.

Ultrasonic cleaning:

Professional ultrasonic cleaning may be preferred.

Day/Night Shades

Leave Day/Night shades in the up position when not in use to help the shades hold their shape.

Tension Adjustment:

Tension should be adjusted if the shades are loose or there is excessive vibration. A button is located on the bottom of the shade at each end. Two lines on each side of the shade are threaded through the button and tied off.

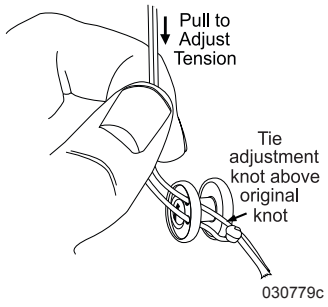

- Pull the tied-off lines through the button to increase tension. Leave some slack so the shades are not too tight.
- Tie the lines off at the new position. Adjust each side equally.
- Operate the shades to ensure tension is set correctly and equally on both sides.
- Trim excess line from both sides if desired.

Dusting:

Vacuum with a brush attachment or use a dusting tool on a regular basis.

Cleaning:

A dry foam cleaner may be used for soil and dirt removal. Follow all directions on the container, or use a cleaning solution of ¼ oz. clear liquid soap to 8 oz. water.

NOTE:
Do not use colored liquid soap as a stain may appear when fabric dries.

MOLD & MILDEW

What is Mold?

Mold is a type of fungus that occurs naturally in the environment and can leave a musty odor, discolor fabrics, stain surfaces and cause considerable damage to the motorhome.

What Does Mold Need to Grow?

Mold requires a food source, such as grease or soil. Synthetic fabrics, such as acetate, polyester, acrylic and nylon are mildew resistant, but soil on the surface of these fabrics are susceptible to mold.

Temperate climate and moisture also help to cultivate mold growth. Moisture in the motorhome can result from unattended spills, leaks, overflows and condensation. Moisture allowed to remain on a growth medium can develop mold within 24 to 48 hours. Minimizing moisture inside of the motorhome can reduce or eliminate favorable mold growth conditions. Good housekeeping and regular maintenance are essential in the effort to prevent or eliminate mold growth.

Consequences of Mold:

All mold is not necessarily harmful, but certain strains of mold have been shown to cause, in susceptible persons, allergic reactions, including skin irritation, watery eyes, runny noise, coughing, sneezing, congestion, sore throat and headache. Individuals with suppressed immune systems may risk infection. Some experts contend that mold causes serious symptoms and disease which may even be life threatening.

However, experts disagree about the level of mold exposure that may cause health problems and about the exact nature and extent of the health problems that may be caused by mold. Moreover, the Center for Disease Control states that a casual link between the presence of toxic mold and serious health conditions has not been proven.

Standards or threshold limit values for concentration of mold or mold spores have not been set. Currently, there are no EPA regulations or standards for airborne mold contaminants. There is simply no practical way to eliminate all mold and mold spores in the indoor environment. For example, studies have shown that ozone cleaners are not effective at killing airborne mold or surface mold contamination.

Controlling Mold Growth:

The motorhome owner should eliminate mold growth in the motorhome. Take the following steps to eliminate mold growth in the motorhome:

- Carefully examine items for signs of mold before loading them in the motorhome. Potted plants (roots and soil), furnishings, clothing and linens, as well as many other household items, may contain mold.
- Regular vacuuming and cleaning will help reduce mold levels. Mild bleach solutions and most tile cleaners are effective in eliminating or preventing mold growth.
- Indoor humidity can be reduced by 30 to 60% when venting clothes dryers to the outdoors. Ventilate the kitchen and bathroom by opening windows, using exhaust fans or a combination of both. Operating the air conditioning will remove excess moisture in the air and help facilitate evaporation of water from wet surfaces.
- Promptly clean up spills, condensation and other sources of moisture. Thoroughly dry any wet surfaces or material. Do not let water pool or stand in the motorhome. Promptly replace materials that cannot be thoroughly dried.
- **Inspect** for leaks on a regular basis. Look for discolorations or wet spots. Repair leaks promptly. Inspect condensation pans (refrigerators and air conditioners) for mold growth. Take notice of musty odors and any visible signs of mold.
- Should mold develop, thoroughly clean the affected area with a mild solution of bleach. First, test to see if the affected material or surface is color safe. If mold growth is severe, call on the services of a qualified professional cleaner.
- If mold cannot be removed, throw the item away.

Whether or not a motorhome owner experiences mold growth depends largely on how the motorhome is managed and maintained. As a manufacturer, our responsibility is limited to things that we can control. As explained in the written warranty, we will repair or replace defects in the construction (defects defined as a failure to comply with reasonable standards of motorhome construction) for the Limited Warranty coverage period provided.

THE MANUFACTURER WILL NOT BE RESPONSIBLE FOR DAMAGE CAUSED BY MOLD THAT MAY BE THE CONSEQUENCE OF OR ASSOCIATED WITH DEFECTS IN THE CONSTRUCTION.

PEST CONTROL

Regardless of the area one lives in or travels to, it is safe in stating there will be pests waiting. These pests are not only annoying; they can pose a health risk and create serious damage to the motorhome.

- Common pests include insects such as ants, cockroaches, termites, flies, pantry pests and wasps as well as wildlife such as rodents, raccoons, bats, birds and snakes. It is important to remember that pests are searching for food, water and a place to live. Eliminating any one of those elements will help control the pest infestation. Take immediate steps to remove pests as soon as their presence is detected.

Steps to help control pests:

- Reduce clutter inside the motorhome and storage bays. All storage items, particularly food (including pet food), should be kept in tightly sealed containers. Seal all cracks and holes, and insure that window, door and vent screens are securely in place.
- Routinely clean the motorhome, including storage bays. Wipe down the water bay. Promptly remove all crumbs from areas where food is regularly prepared and eaten. Garbage should be placed in a sealed container and removed to an outside receptacle daily. Only put out pet food that will be immediately eaten.
- Keep foods such as flour, cereal, spaghetti and pet food in resealable containers with tight lids.
- Sweep and vacuum often (especially in eating areas) to help eliminate a food source for pests.
- Pests seek indoor shelter with food and water. Limit their access to water or moisture sources by sealing cracks and leaks in pipes and faucets. Reduce moisture in the motorhome by controlling condensation, immediately wiping up spills and promptly repairing leaks. Be extra alert around areas that attract rodents and insects, including the sewer hose, fresh water hose, bay doors and items that may be leaning against the outside of the motorhome, such as fishing poles and golf clubs.
- When the motorhome is stored outdoors, clear the surrounding area of all rodent friendly hiding places: shrubs, trees and clutter. Completely seal the underside of the motorhome. Wire mesh will work well to prevent points of entry, but beware of blocking necessary air vents. Prior to operating the motorhome after storage, remove all insect and animal nests that may have developed around vents, engine compartments, the exhaust pipe and in the wheel wells.
- Seal cracks, crevices, and gaps around doors and windows.

Rodents:

Rodents may chew through wires or build nests in components of the motorhome. Signs of rodent infestation include droppings, shredded material or chewed furniture fabrics and vinyl. Rodents like to build nests with wire insulation and are commonly attracted to the outside coating of 120 Volt AC wiring more than 12 Volt DC wiring.

NOTE:
Although the back cap of the motorhome is well sealed, rodents are capable of chewing through the foam insulation and that area should be routinely inspected.

If signs of rodent infestation exist around the motorhome, place traps or poisons in suspected areas. Keep traps and poisons safely away from pets and children. Cheese is not the best bait for a rodent trap. Use peanut butter or chocolate in small amounts.

Place the bait on the trigger of the trap to induce the rodent to climb onto the trigger to reach the bait. Rodents do not limit invasion to unused vehicles.

Insects:

Eliminate insects when signs of infestation appear. If the type of insect cannot be identified, purchase sticky traps from the hardware store and place the tape where the insects have been seen. Once a sample is caught, seek assistance in identifying the insect to determine what will be required to remove the infestation.

Regularly inspect the exterior of the motorhome for signs of a budding wasp nest, and promptly destroy small nests before they become too large.

Spiders can be in any structure. Immediately remove spider webs. Some types of spiders like to nest on top of the diesel tank and around the diesel hoses. Dispense of spiders using a vacuum. Use care to capture the spider and egg sacs. Throw the vacuum bag away in a sealed bag.

Fruit flies invade the motorhome by attaching to fresh fruits and vegetables. Determine what food items are generating the flies and discard that item in an outdoor trash receptacle. Fruit flies can be eliminated with a homemade trap. Pour a few ounces of vinegar into a cup and cover the cup with plastic wrap. Secure the wrap with tape or a rubber band and poke a ¼" hole in the plastic. Place the trap in the area where fruit flies are present.

Ants live in colonies. Only a fraction of the ant colony will leave to seek food. Spraying pesticides will only kill the ants that are away from the colony. The colony must be destroyed to eliminate all ants. Keep ants away from the sewer hose by spraying the hose ends with a soap and water solution.

Fleas can be removed by properly treating pets with a veterinarian approved treatment and by thoroughly cleaning the motorhome. Vacuum vinyl areas and tile floors to remove dust, flea larva and flea eggs. Follow by thoroughly washing those areas with soap and water. Carpets must be vacuumed and treated with a residual flea control product labeled safe for indoor carpet and furniture use. Perform the cleaning treatment daily for three days to ensure that all fleas have encountered the treatment.

Flying outdoor insects are attracted to bright light. Yellow porch light covers on the motorhome work to discourage insect invasion. During nighttime hours insects will be attracted to docking lights or other bright exterior lighting.

If the presence of moths is detected inside the motorhome, usually by holes appearing in material, clean the affected clothing and all other items stored in the same area. Follow by completely cleaning the closet, dresser or storage area. Seal cracks and treat the area with a product labeled safe for indoor pest control.

Birds:

Even birds can be considered pests, particularly when the motorhome is parked in the flight path of a flock. Bird droppings are hard to remove and will leave stains. Prevent permanent staining to the motorhome roof by regularly cleaning the surface to remove all bird droppings.

Damage from Pests:

Lizards have been known to crawl into the inverter and short out the circuit board. Lizards can be captured using glue traps. To remove the lizard from the trap, dissolve the glue with vegetable oil and release it outside and well away from the motorhome. A scorpion will glow blue-green in UV light. Be extra careful as scorpions stings can be poisonous.

Best sources of information about common household pests:

The Internet is a great place to find information about common pests. The National Pest Management Association web site can be a useful resource for common pests. Another good source of information is colleges and universities with entomology (study of insects) departments.

Electronic pest control devices can be costly and most likely will not work on all types of rodents and insects. When calling on the services of a professional to combat pest infestation, call a reputable business that is licensed in handling pesticides. Check references.

Explain that you are seeking assistance for a motorhome, as treatments may differ from standard household jobs. If a pest problem is suspected in the motorhome, consider professional pest control help. The following guidelines can be used for selecting a pest control service:

- Seek referrals from those who have used pest control services. Inquire about the type of pest problem encountered and if they were satisfied with the service.
- Membership in the national, state or local pest control associations is a good indicator that the company has access to modern technical information and is committed to further education.
- Reach a complete understanding with the company before work starts; find out what the pest is, how the problem will be treated, how long the period of treatment will be, and what results can be expected.
- Be sure to understand what is guaranteed and what is not.

STORAGE
Short Term

Short term storage is defined as storing the motorhome for a period of thirty days or less. Properly preparing the motorhome during periods of short term storage will make bringing the motorhome out of storage a much easier process. Winterize the plumbing system if the motorhome is stored in winter months, or if stored when temperatures are below 32º F.

Checklist - Short Term Storage:

- Retract slide rooms. Do not store the motorhome with slideout rooms extended.
- Shut off all appliances. Close the primary propane valve.
- Remove all articles from refrigerator/ freezer and clean thoroughly. Prop doors open to prevent mildew.
- Drain the holding tanks. Winterize the fresh water system using FDA RV antifreeze or air pressure to evacuate the plumbing system.
- Disable Auto Genstart.
- Retract and secure all awnings.
- Turn off the interior house power using the battery cut-off switch.
- Store house and chassis batteries fully charged. Batteries stored in a discharged state will readily freeze and damage the battery.
- If possible, position the motorhome so the house and chassis batteries are accessible for charging or changing without having to move the motorhome.
- If AC power is not available, turn both the house and chassis battery disconnect switches off.
- If available, leave the motorhome hooked to shore power. Leave both the house and chassis battery disconnect switches on.
- Careful placement of a small heat source in the interior will help control moisture. Desiccate filter systems will help remove interior moisture.
- If possible, store the motorhome inside a storage building.
- If stored outside, inspect all seams and seals twice a month for possible leakage.
- Store the motorhome with a full tank of fuel to minimize moisture condensing at top of fuel tank.
- Close vents and windows to prevent entrance of wind driven rain.
- Store tires at maximum inflation pressure.
- Leave open cabinet doors and drawers to facilitate air movement behind those areas.
- Perform a full interior inspection for water leaks twice a month. Be sure to check behind all cabinet doors.

Long Term

Long term storage of the motorhome can be defined as leaving a motorhome unattended for a period of thirty days or more. A motorhome requires protection from the elements just as a house or a car would. When left out in the environment without proper storage or maintenance, a motorhome is vulnerable to the moisture and oxidation processes inherent in the environment.

NOTE:
The natural process of condensation will occur with temperature changes of 30º F. or more in one day. Humidity readings of 60% or greater will allow the accumulated moisture to remain for extended periods of time.

If AC power is not available in storage area:

- Turn off all appliances.
- Turn off interior house power using the battery cut-off switch.
- If possible, situate the motorhome so the house and chassis batteries remain accessible. This allows a battery to be charged or replaced without moving the motorhome.
- Charge house and chassis batteries to a full state of charge.
- Turn both the house and chassis battery disconnect switches off.
- Disable Auto Genstart.
- Check battery voltage while the motorhome is in storage if stored outside.

- Preventive measures should be used if the voltage readings are low. It will make it easier to remove the motorhome from storage or move the motorhome in an emergency situation.

NOTE:
Batteries in a low state of charge will readily freeze and damage the battery.

If AC power is available:

The house and chassis battery disconnect switches should remain on. The inverter will charge both the house and chassis battery banks. 30 Amp shore power service will be more than adequate.

CAUTION:
A 20 Amp service using light duty extension cords and the required adapters create serious voltage losses. Line voltage loss and the resistance at each electrical connection is a hazardous combination and should be avoided. Damage to sensitive electronic equipment may result.

Surfaces to park/store the motorhome on:

- Avoid parking the motorhome on a grass or gravel surface to prevent moisture accumulation.
- Concrete pads seal the surface and allow better ventilation under the motorhome.
- Storage buildings with concrete floors, or heated storage facilities, greatly reduce the amount of moisture accumulation and protects the motorhome from moisture damage.

Outdoor Storage Area:

- The interior should be heated to help prevent mold and mildew growth. Moisture removing desiccate filter systems are available from hardware and RV supply stores. Place the filter system inside the motorhome to reduce interior moisture condensation or humidity.
- Proper winterization of the fresh water system will prevent potential damage in extreme cold.
- Ultraviolet radiation affects soft goods and rubber products such as privacy curtains, window shades and tires. These items should be protected. Store Day/Night Shades in the Up position.
- Cardboard templates can be made for the windows to protect the interior from exposure to direct sunlight.
- Tire covers are available to protect the sidewall of the tires from cracking. Make sure tires in storage contain the correct inflation pressure to prevent damaged caused by underinflation.
- Regularly wash the exterior to help control moss accumulation. Waxing the motorhome twice a year will augment these substances.

Inspect the motorhome:

- Perform a full interior inspection for water leaks every two weeks while the motorhome is in storage. Check inside all cabinets for signs of dampness or leaks. **Inspect** the ceiling areas around roof vents or other roof openings.
- Leave cabinet doors and drawers open to facilitate air movement behind those areas.
- Inspect and clean the roof and sidewall seams at least twice a year. **Inspect** for exterior sealant gaps of all roof seams, vents, skylights, roof air conditioners and windows.

Fuel:

Storing the motorhome with a full tank of fuel will minimize moisture condensing at the top of the tank. Diesel fuel is an organic material that can develop microbial growth (black algae). Fuel stabilizers may be added to control microbe growth and degradation of the fuel. Consult the engine manufacturer's owner's manual or a distributor for further detailed information on fuel stabilizers and additives.

Brakes:

Brakes suffer from non-use during periods of storage. The bare metal machined surfaces of brake drums or rotors have only a light coating of dust from the brake lining friction material. The brake dust is the only thing protecting the bare metal surfaces from rusting. Only regular brake applications dry the moisture preventing rust on brake drum or rotor surfaces. During periods of non-use, oxygen and moisture oxidize the machined surfaces. Only occasional use keeps these surfaces from oxidizing. Rusty brake drum or rotor surfaces permeate the brake lining upon the first few applications, reducing the friction action of the linings.

Engine:
Internal combustion engines need to be "exercised" on a regular basis to ensure an adequate supply of lubricating oil coats the cylinder walls and piston rings. Valve and valve seat surfaces also suffer from non-use. Some valves will remain open depending at which part of the combustion cycle the engine has stopped. The heat and cold of the day allows moisture to accumulate through the exhaust system. Start all engines, including the generator, at least twice a month.

Electric Motors:
Electric motors in the motorhome should be occasionally operated to help lubricate and keep surfaces freely rotating. These items include the roof air conditioners, dash fans, dash blower motor, furnace and powered roof vents.

Winter Storage Checklist

- **Plumbing Lines -** Drain and protect. ***(See Winterizing - Section 6.)***
- **Fresh Water Tank -** Drain.
- **Body -** Clean and wax. Reseal the roof as needed.
- **Countertop and Cabinets -** Wash with mild soap and water.
- **Curtains -** Remove and clean according to care specifications.
- **Windows -** To protect interior fabric from fading, cover windows by pulling blinds. For Day/Night shades cover with a separate cover such as a sheet or a cut out template. Day/Night shades hold their shape better if stored in the up position.
- **Holding Tank -** Drain and rinse. Close valves.

LUBE:
Add a small amount of RV antifreeze to waste holding tanks to keep valves and gaskets lubricated.

- **Drain Traps -** Pour RV antifreeze down all drains.
- **Refrigerator -** Clean and leave both doors propped open. Cover exterior panels and roof vents. If equipped with an icemaker, drain icemaker and icemaker tray. See the refrigerator OEM manual for more detail.
- **Batteries -** Add distilled water and recharge if needed. If necessary, disconnect the cables, remove the batteries and store them in a cool dry place. Check and recharge as needed.
- **Air Conditioner -** Remove the air filters. Clean or replace.
- **Roof -** Keep clear of snow accumulation or damage may occur.
- **Interior/Exterior -** Storing under cover or indoors helps extend interior and exterior life.
- **Fuel Tank -** Diesel fuel tank should be full of fuel.

Removal from Storage

Extensive freeze damage or other serious deterioration can occur if the motorhome is not properly winterized. If the motorhome is properly and carefully prepared for storage, removal from storage will not be difficult. The following checklist pertains to items or areas that should be inspected when it is time to take the motorhome out of storage and put back into operation. If there are any questions regarding storage or winterization, consult a qualified service technician.

- Thoroughly inspect the outside of motorhome. Look for animal nests in the wheel wells or in other out of the way places.
- Remove all appliance flue vent covers, ceiling vent covers and air conditioning covers. Clear the refrigerator openings of debris, insect nests, webs, etc.
- Open all doors and compartments. Check for animal or insect intrusion, water damage or other types of damage which may have occurred.
- Check the state of charge of the batteries. If necessary, fill battery cells with distilled water only. Charge as necessary. Inspect the cable ends and terminals. They should be secure and free of corrosion.
- Check all the chassis fluid levels: engine oil, engine coolant, hydraulic fluid reservoir, transmission oil and rear axle oil.

- Start the engine, allowing it to reach operating temperature. Ensure gauge readings indicate a proper range.
- While the engine is running, check the headlights, taillights, turn signals, back-up lights, license plate light and emergency flasher. Operate the dash air conditioner. If the air conditioner does not work or the compressor makes unusual noises, have the system checked by a qualified air conditioner technician.
- Shut the engine off. Adjust or add fluids as necessary. Inspect around the engine and under the motorhome for fluid leaks.
- Drain, sanitize and flush the fresh water system as outlined in the ***Water Systems - Section 6***. Inspect the sewer drain hose and connections for leaks. Replace if necessary.
- Operate all faucets and fixtures in the fresh water system. Run a sufficient amount of fresh water through all the water lines and faucets to thoroughly purge any potable antifreeze from the fresh water system.

NOTE:
Discard at least the first two trays of ice from the icemaker to ensure the ice does not contain traces of antifreeze or other contaminates.

- Open cabinet doors and drawers. Inspect for water leaks at fittings. Repair as necessary.
- Operate all 12 Volt DC lights and accessories. If something does not work there may be a bad 12 Volt DC circuit breaker or blown fuse.
- Install new batteries in battery operated safety detectors or devices. Test the carbon monoxide, propane and smoke detectors for proper operation.
- Check that the monitor panel is properly functioning.
- Inspect the 120 Volt AC electrical system which includes the power cord, inverter, all outlets and exposed wiring.

NOTE:
Prepare the generator for operation following the instructions in the generator OEM manual.

- Start and run the generator.
- Confirm that the batteries are charging. Operate the 120 Volt AC appliances and air conditioners. If an electrical item or appliance is not properly functioning, contact the dealer or an authorized service center to have it evaluated.
- Have a qualified technician inspect the propane system and perform a propane leak test. The leak test should also include an propane regulator adjustment (if needed). The test can also verify if the regulator is faulty and should be replaced. Have the propane tank inspected.
- Operate each propane appliance. Observe all burner/pilot flames for proper color and size.
- Inspect and clean the interior.
- Check the sealant around all roof and body seams and windows. Reseal if necessary.
- Lubricate exterior locks with a graphite lubricant.
- Check condition of the windshield wiper blades. Check the wiper/washer operation.
- Wash and wax the exterior. Check the body for scratches or other damage; touch up or repair as necessary. Flush the underside thoroughly.
- Run through the operational checks for steering, brakes, engine and transmission. Operate the motorhome slowly during these checks to allow sufficient circulation of fluids and resetting of the components.
- If desired, have the dealer or repair center double-check preparation to make necessary adjustments and/or correct defects.

NOTE:
Road vibration can cause fittings and fasteners to loosen. Perform periodic inspection of fasteners and fittings.

Appliances
Section 4

APPLIANCES - INTRODUCTION 80
REFRIGERATOR (OPTIONAL) 80
Operation Specifics 80
Control Panel - Four Door 81
Icemaker 82
Refrigerator Alarm 82
Cooling Unit Fans 83
Doors 83
Storage Procedures 83
Interior Light 83
Service 84
Exterior Refrigerator Access Panel 84
Air in Propane Supply Lines 84
REFRIGERATOR - RESIDENTIAL 84
Control Panel 85
Icemaker 86
Water Filter 86
CONVECTION MICROWAVE 87
Care & Cleaning 88
COOKTOP - PROPANE 89
Safety 90
Cooktop Covers 90
Burner Grate 90
Care & Cleaning 90
COOKTOP - ELECTRIC (OPTIONAL) 90
Cleaning and Care 91
AIR CONDITIONING - ROOF 91
Thermostat 91
LCD Display 91
Remote Temperature Sensor 92
Air Conditioning - Roof 92
Fan Operation Only 92
Air Conditioner Operation 92
Heat Pump Operation 92
Air Conditioner Maintenance 93
AQUA-HOT - MODEL 400D 94
Aqua Hot Operation – Diesel 94
Aqua Hot Operation – Electric 94
Troubleshooting 95
Bay Thermostat 95
Maintenance 95
Winterize the Aqua-Hot 96
Annual Tune Up 97
Internal Diagram 98
WASHER-DRYER PREPARED 98
WASHER/DRYER STACKED (OPTIONAL) 99
Washer 99
Test Cycle 99
Operating Instructions 99
Cleaning the Washer 100
Winterizing the Washer 100
Dryer 100
Operation 101
Dryer Maintenance 101
CENTRAL VACUUM (OPTIONAL) 101
Operation 101
Maintenance 101
FIREPLACE ELECTRIC (OPTIONAL) 103
Operation 103

APPLIANCES - INTRODUCTION

This section covers operation and care of various appliances found in the motorhome: refrigerator, cooktop, microwave, roof air conditioner and optional appliances. These appliances operate on AC or DC current, propane or a combination of the three.

NOTE:
Appliance features and options vary with floorplans.

INFORMATION:
Detailed information with CAUTION or WARNING instructions for the various appliances, other than what is found in this section, can be found in the OEM manuals.

WARNING:
Before entering any type of refueling station, turn off all propane operated appliances. Most propane appliances are vented to the outside. When parked close to a gasoline pump it is possible for fuel vapors to enter this type of appliance and ignite, resulting in an explosion or fire.

WARNING:
Carbon Monoxide gas may cause nausea, fainting or death. Operating a propane appliance with inadequate ventilation or partial blockage of the flue can result in Carbon Monoxide poisoning. Do not store flammable liquids such as lighter fluid, gasoline or propane in the outside refrigerator compartment.

REFRIGERATOR - ABSORPTION (OPTIONAL)

Follow the specific guidelines in the refrigerator OEM manual for detailed operating and maintenance instructions. This will help ensure longevity and proper operation of the refrigerator. With proper care and maintenance, the refrigerator should provide years of trouble-free service.

INFORMATION:
The refrigerator may require special winterization procedures. Refer to the refrigerator OEM manual for instructions and recommendations.

TIP:
To reduce the possibility of food spoilage, keep the interior box temperature at or below 40º F. The refrigerator will consume more energy to maintain low temperature, especially in hot, humid climates. Lower temperature may also lead to more frost build-up.

Operation Specifics

- The refrigerator operates from propane or 120 Volts AC electric.
- DC Voltage for control pad operation must be no higher than 15.4 Volts DC or lower than 10.5 Volts DC.
- AC voltage must be no higher than 132 Volts AC or lower than 108 Volts AC.

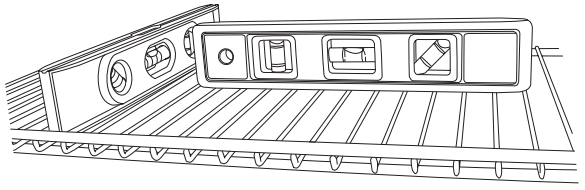
020295

Important: Operate refrigerator only when level. Level the refrigerator using a torpedo or bulls eye level. Place the levels on the bottom shelf of the refrigerator. The bubble should be at least half-way inside the circles.

CAUTION:
Operating the refrigerator off-level separates chemicals, causing them to crystallize and block the circulation action of the cooling unit. Damage is cumulative and irreversible.

WARNING:
Do not use the refrigerator if there is an ammonia smell inside or outside of the refrigerator, or if a yellowish substance appears inside or at the outside access compartment. This can be an indication of a refrigerant leak. Contact an authorized repair facility.

Refrigerator Operation:

- House batteries must be charged and on.
- The primary propane valve must be open.
- **Figure A:** The refrigerator 120 Volt AC cord(s) must be plugged in (located outside behind refrigerator access door).

Figure A

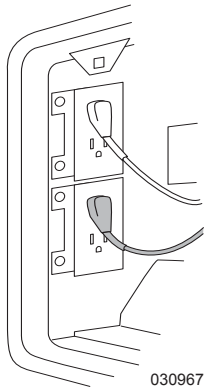
030967

- **Figure B:** If controls do not light up, check house battery charge status or see if the 12 Volt DC wires are plugged into the refrigerator's circuit board (located outside behind refrigerator access door).

Figure B

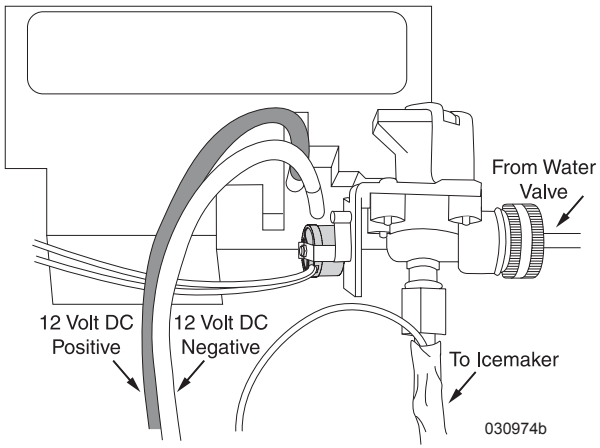

- **Figure C:** The water valve for the ice maker is located under the refrigerator or behind the exterior refrigerator access door. The water valve must be open to supply the icemaker with water.

Figure C

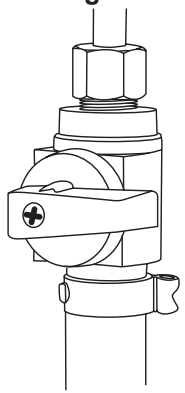

Valve shown in closed position

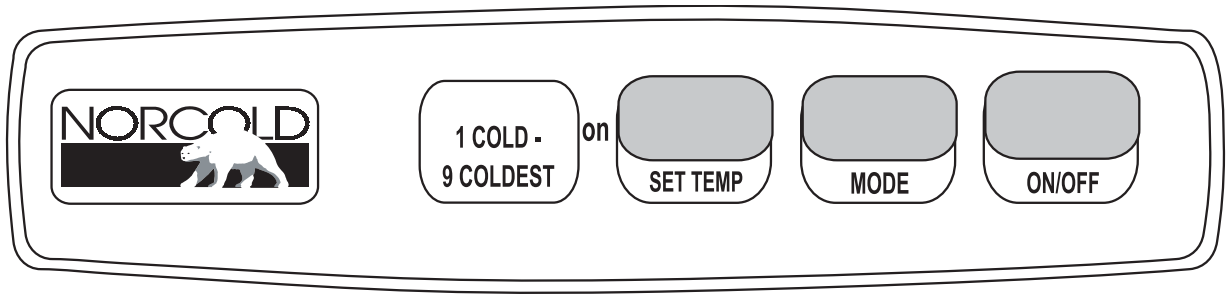

030864d

Control Panel - Four Door

ON/OFF Button:
Turns the refrigerator on or off.
- Push the On/Off button to start the refrigerator in Auto mode.
- Push and hold the On/Off button for two seconds to shut it off.

LED Display:
This screen is used for mode, temperature and fault code display.

MODE Button:
Controls the operation mode of the refrigerator.
- Press the Mode button to select between Automatic AU, AC or LP operation.

SET TEMP Button:
Adjusts the temperature.
- To adjust, push and hold the Set Temp button.
- Number "9" is the coldest setting.

Manual Mode (MAN):
When one of the two manual modes is selected:

1. **AC** = The refrigerator is operating on AC electric.
2. **LP** = The refrigerator is operating on propane.

Automatic Mode (AU):
This feature selects AC over propane operation. If AC discontinues, the refrigerator will automatically switch to propane operation. An alarm will sound and a code will display if the propane igniter fails to light.
- Press the Mode button until AU displays. Release the button.
- Press and hold the Set Temp button until the desired temperature displays. Release button.
- In Auto mode, AU/AC or AU/LP will alternate three times when a mode has changed.

If the propane does not ignite within 30 seconds, the control changes to a different energy source or the gas safety valve closes and "NO" "FL" displays. Turn the refrigerator off then back on. If the burner does not ignite after several attempts, consult an authorized service technician.

Tips:

- Cool items first, if possible, before putting them into the refrigerator.
- Keep the doors shut. Think about desired contents before opening the doors.
- Allow the refrigerator 24 hours of operation before actual use to kick start the refrigerator process.
- A box of open baking soda will help absorb food odors.
- Ice buildup can be slowed in high humidity if the end of the drain tube is submersed in drip pan. It may be necessary to add water to the drip pan to keep the tube submersed.

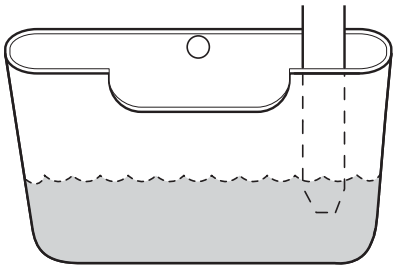

Drip Pan: Located behind the outside access.

Icemaker

The icemaker requires 120 Volts AC to operate. Only after the freezer reaches freezing temperature will the icemaker function. City water or the water pump must be on and the water valve for the water supply line to the icemaker must be on. The water valve is located under the refrigerator or behind the refrigerator access door. The water valve must be open if the refrigerator is equipped with an icemaker.

- Pull the metal arm (bail) down to turn the icemaker on.
- Push the arm up to turn the icemaker off.

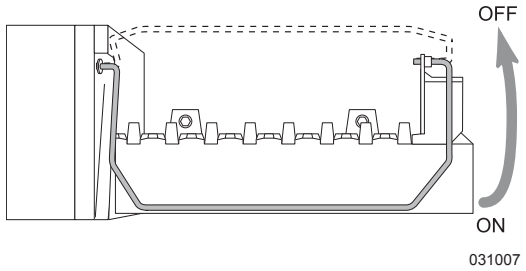

Important:

- Do not operate the icemaker while the motorhome is in transit. Water may spill from the tray during travel.
- Do not use the first one or two trays of ice following storage.
- Do not operate the icemaker without water pressure supplied to the refrigerator. Damage to the icemaker assembly could occur.

Water Line Heater:

A thermal disc supplies voltage to heater tape when ambient temperature is less then 38° F. (+/- 4°) and shuts off at temperature greater than 48° F. (+/- 5°). The water line heater is only for the line from the solenoid to the icemaker. The line from the icemaker shut-off valve to the water valve is protected with foam insulation.

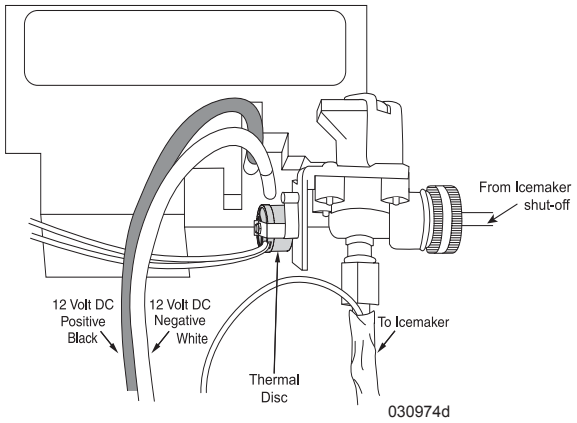

Refrigerator Alarm

The refrigerator audible alarm will sound for the following reasons:

- DC or AC voltage is higher or lower than allowed.
- The refrigerator fails to light on propane or fails to light after a period of operation.
- Refrigerator is set to Auto, 120 Volts AC is discontinued and propane fails to light. NO AC will display, followed by NO FL, and the alarm will sound. Consult the OEM manual.
- Door is open longer than two minutes.
- The circuit board detects a failure. The control panel will display a code.

NOTE:
If the alarm sounds, note the code in the LED display and turn the refrigerator off to silence the alarm.

INFORMATION:
Refer to the refrigerator OEM manual for the list of codes and their meanings.

Cooling Unit Fans

The cooling unit is equipped with a pair of cooling fans that pass air across the cooling unit. These fans start automatically and are audible when in operation.

Doors

The refrigerator doors use a positive latch that secures the door with a “click” to prevent the door from opening during travel. The doors use a heating element located in the flapper on the left door (four door model) or in the door (two door model). The heating element activates when operating the refrigerator in any mode to help prevent moisture accumulation in high humidity conditions.

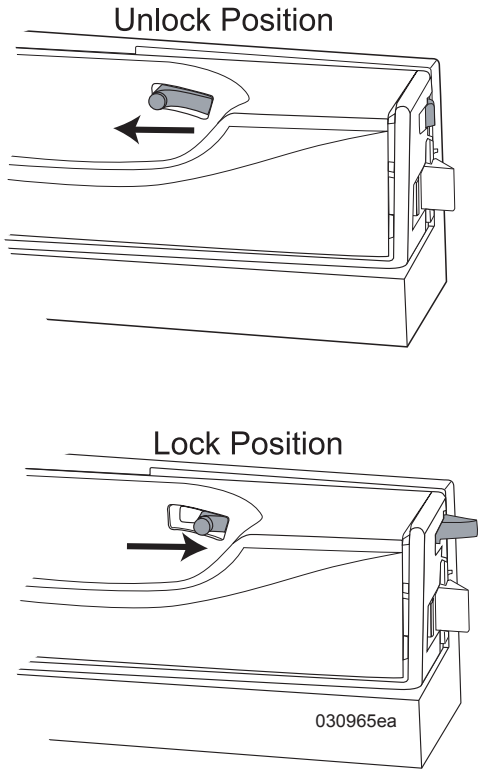

Mold and mildew may contaminate a completely sealed refrigerator in storage. The motorhome refrigerator has a storage position to lock the doors partially open and promote airflow that will help prevent mold build up.

To use the refrigerator storage position:

- Completely empty the refrigerator.
- Disconnect power to the refrigerator.
- Thoroughly clean the interior using a soft cloth to remove all stains and spills.
- Partially open the doors and slide tab into the cut-out of the striker plate.

Storage Procedures

- Turn the refrigerator off and remove all items. Leave the drip tray under the cooling fins.

CAUTION:
Do not use a heating gun or hair dryer to remove frost. Permanent damage could result to plastic parts.

CAUTION:
Do not use a knife, ice pick or any other sharp instrument to remove ice from the freezer as these can puncture and damage the interior or cooling unit.

- Wash the interior using mild spray cleaners or a solution of liquid dish detergent and warm water.
- Do not use scouring pads or abrasive cleaners that can damage the interior finish.
- Rinse with a solution of baking soda and water. Dry with a clean cloth.
- Lock the doors open.

Interior Light

The interior light is located at the top of the fresh food compartment. When the door is open the light will illuminate.

Bulb Replacement:

- Remove the light cover by pulling it toward the front of the refrigerator.
- Remove the light bulb from the holder.
- Install a **GE#214-2** replacement bulb and replace the cover.

NOTE:
Confirm part number before ordering or obtaining replacement.

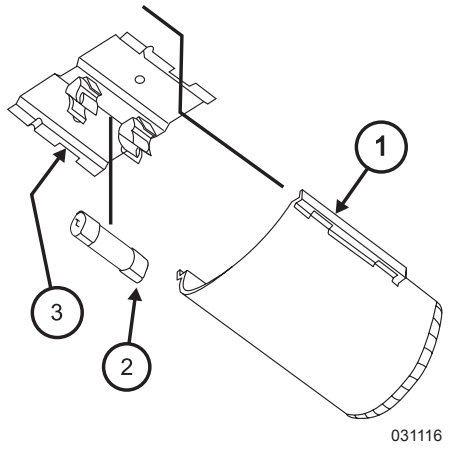

Service

The propane function of the refrigerator and propane pressure will require annual service. Over time, the BTU rating of the flame can change, affecting the refrigerator's performance. Ambient temperature, high humidity and altitude above 5,500 ft. can affect performance and function. If possible, switch mode operation to AC while at a higher altitude.

Exterior Refrigerator Access Panel

After opening the refrigerator access panel, the panel must be properly closed and secured.

CAUTION:
Ensure the exterior refrigerator access panel is properly replaced after removal. Failure to do so may result in the panel jarring loose during travel.

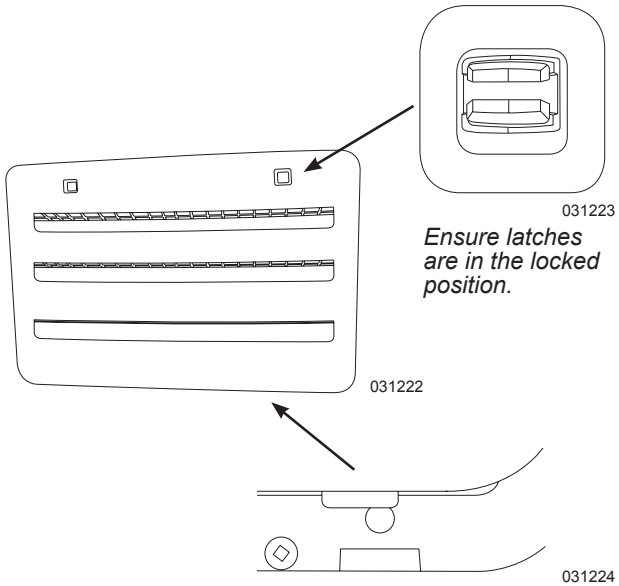

Ensure tabs are inserted.

Air in Propane Supply Lines

For safety reasons, the refrigerator will attempt to ignite on propane within a specified amount of time. When starting the refrigerator for the first time after storage or after servicing the propane supply system, propane supply lines may contain air. Due to air in the supply lines the refrigerator may not ignite on propane within the specified amount of time. Follow the procedure on how to remove air from the propane supply lines.

To remove the air from the propane supply lines:

- Ensure the primary propane shut-off valve is open.
- Light the cooktop burners first to quickly purge air from the main distribution line.
- Push the On/Off button to turn the refrigerator on.
- Press the Mode button until the refrigerator indicates LP. The refrigerator will start a 30 second trial for ignition during which the propane safety valve opens and the igniter sparks.
- If the refrigerator fails to light, indicated by F or NO FL (No Flame), turn the refrigerator off then back on and set to LP mode. If after the third attempt the refrigerator fails to light, stop and consult your local dealer or an authorized Norcold service center.

REFRIGERATOR - RESIDENTIAL

The refrigerator operates from shore power, the generator or the inverter. For ease of operation, thermostat controls are located on the freezer door with the water and ice cube dispenser. Ice can be dispensed as crushed or cubed.

NOTE:
The refrigerator operates on 120 Volts AC, not from propane.

INFORMATION:
See the OEM manual for detailed information and instructions.

Refrigerator Operation from Inverter While Traveling:

Turn the inverter and refrigerator on. The electrical combination of the engine alternator and the inverter will supply the power necessary to operate the refrigerator on 120 Volts AC while traveling.

NOTE:
Be sure to turn the inverter off after travel. Hook to shore power to continue refrigerator operation.

Refrigerator Operation while Dry Camping:

Start the generator or turn the inverter on to power the refrigerator. If using the inverter, enable the Automatic Generator Start feature (through inverter remote) to avoid dead house batteries and the possibility of food spoilage. The AGS feature will start the generator based on parameters set in the inverter remote. See ***"Inverter"*** in Section 8 for information on programming AGS.

Control Panel

Features include temperature adjustment, water filter monitoring and filter alert reset. LED's indicate water filter status. Dispense water and ice, monitor the water filter and set temperature from the control panel. LED's indicate when a feature is active.

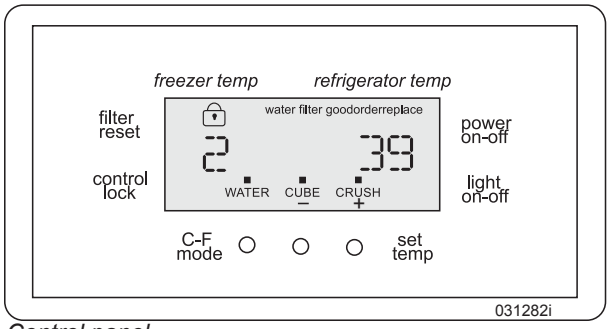

Control panel

On/Off Button:
Press and hold On/Off for three seconds to turn the cooling system on or off. This will not disconnect power to lights or other electrical components.

NOTE:
Turning off the refrigerator does not disable refrigerator power consumption. The refrigerator must be unplugged to remove power for lighting and control panel operation.

Temperature Controls:
Press the up or down arrow to display temperature. The current set temperature momentarily displays before reverting to current temperature. The current temperature display is for reference only.

Place a separate thermometer in the freezer or fresh food compartment for an accurate temperature reading.

CAUTION:
Keep the fresh food compartment temperature at or below 40º F. to reduce the possibility of food spoilage. Place a separate thermometer inside the freezer or fresh food compartment to accurately monitor temperature.

Allow the refrigerator to operate for at least 8 to 12 hours before storing food inside to ensure safe food storage. Adjust temperature gradually allowing time for new preset temperature to stabilize.

Water:
Press this button to select water from the dispenser.

Cube:
Press this button to select cubed ice from the dispenser. Press the drinking glass against the dispenser paddle as far up as possible to catch all ice.

Crush:
Selects crushed ice from the dispenser. Press the drinking glass against the dispenser paddle as far up as possible to catch all ice.

Light:
Turns dispenser light on and off. The light will automatically turn on and off with water and ice dispenser use.

Filter Reset:
The Filter Status light above the Filter Reset button will illuminate when water or ice is dispensed. The light will change color depending on water filter condition. (See Water Filter)

Lock:
The ice and water dispenser can be locked to prevent unwanted use. Press and hold the Lock button until the red LED illuminates to lock the dispenser; press and hold until the red LED turns off to release dispenser.

To Dispense Water:
Press a drinking glass against the water dispenser arm. Release dispenser arm to stop water flow. Water is not chilled; add ice for cold water. Do not pour water or ice in the dip tray as there is no drain.

To Dispense Ice:
Select crushed or cubed ice by pressing the corresponding button on the control panel. Press a drinking glass against the ice dispenser arm. Keep the glass as high as possible to catch all ice.

NOTE:
Use only cotton cloth and mild soap to wash refrigerator components. Harsh detergents such as window cleaner or bleach or use of scouring pads can damage the finish.

Icemaker

The icemaker requires 120 Volt AC power to operate. The icemaker will begin producing ice within 24 hours after the refrigerator is properly cooled.

Operation:

- Hook to city water or turn on the water pump.
- Open the valve for the water supply line located behind the exterior refrigerator access panel.
- Remove the shelf above the icemaker tray to access the icemaker power switch.
- Use the power switch to turn on the icemaker. Do not use the bail arm to manually turn the icemaker on or off.
- Before traveling, turn the icemaker off to prevent water from spilling during transit.

NOTE:
Discard the first batch of ice as it may contain impurities.

Water Filter

The refrigerator is equipped with a water filter for the ice and water dispenser. The filter cartridge is located at the top of the fresh food compartment. The filter is rated at a capacity of about 200 gallons. The filter element is installed at the factory, so no initial installation is required. A monitoring system alerts the user when filter replacement is necessary. The Filter Status light, located on the control panel, will illuminate when water or ice is dispensed.

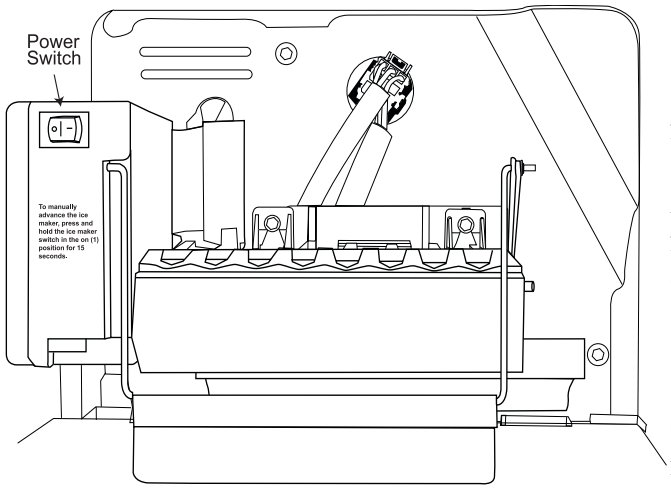

Power switch for icemaker. 031282c

The light will change color depending on condition of the water filter.

Green: Filter is operating within specified life cycle.

Amber: Filter is approximately 80% used.

Red: Filter is completely used. Replace as soon as possible.

Water Filter Replacement:

Monitor the Filter Status light on the control panel to determine water filter replacement. Also replace the water filter after extended periods of non-use.

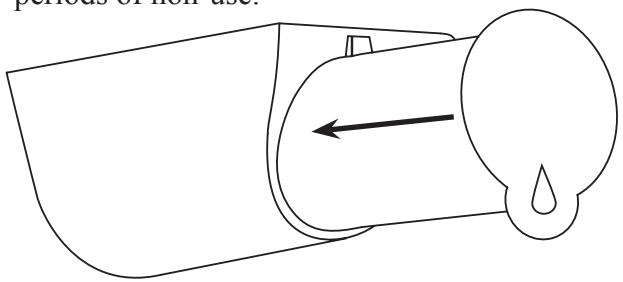

Firmly push inwards on water filter to release. 031282h

Filter Removal:

Turn the icemaker off (power switch is located on the icemaker). Firmly press the filter inward to release the filter. Pull the filter cartridge straight out of the filter housing. A small amount of water may leak from the filter cartridge. Do not operate the water or ice dispenser without the filter in place.

Filter Installation:

Note cartridge index position and insert new cartridge in same position. Firmly push in the new cartridge until it locks into place.

Turn the icemaker on.

Dispense water into a glass. Check the filter housing for leaks. The Filter Reset button is located on the water and ice dispenser control panel. Press and hold the Filter Reset button for 10 to 15 seconds to reset the monitoring system.

Priming the Water System:

Prime the water system after changing the water filter and whenever the water source is changed. Ensure the water supply valve is open. The valve is located in the outside refrigerator compartment. Press and hold a drinking glass against the water dispenser arm until water flows. Sputtering is normal as air is purged. Allow water to flow for three minutes to flush the system of air and impurities.

NOTE:
The dispenser automatically shuts off after three minutes of use. Release and depress the dispenser arm to reset.

Tips:

- If the temperature display flashes, the control system has detected a fault. Call Frigidaire customer service at 1-800-944-9044. A qualified service technician can interpret the flashing message.
- If possible, cool items first before putting them into the refrigerator.
- Keep the doors shut. Plan ahead what is needed before opening the doors.
- Do not block cold air vents with food items.
- Allow the refrigerator 24 hours of operation before actual use to help it get a head start with the refrigeration process.
- A box of open baking soda will help absorb food odors.
- To prevent dead batteries when dry camping, use the Automatic Generator Start feature and inverter to supply AC power to the refrigerator.

CONVECTION MICROWAVE

The convection microwave oven operates from 120 Volt AC supplied by shore power, the generator or inverter.

Operation Tips:

- The glass tray and roller guide must always be in place during cooking.
- Ensure the door is firmly closed before use.
- Ensure cookware being used is microwave safe. Gold paint and some glazes may contain a trace amount of gold which is electrically conductive and not compatible for the convection microwave. Hand painted china commonly contains traces of metal.
- If the control pad is not lit, plug another electrical appliance into the same outlet to verify 120 Volt AC power is present. If the test item works, contact an appliance repair facility to have the convection microwave oven checked.
- Steam accumulating inside or around the outside of the oven door may occur when the convection microwave oven is operated under high humidity conditions and in no way indicates a malfunction of the unit. Wipe away steam using a soft cloth.

Convection Microwave Facts:

One of the most useful documents is the convection microwave OEM manual. Read the document carefully and keep it for detailed information, operating instructions and reference. A properly functioning convection microwave oven presents no hazard with ordinary use. Safety features should be kept in good condition. Never attempt to bypass safety interlocks or allow debris or residue to accumulate on the door or oven face. If the oven is damaged, discontinue use. Oven adjustments or repairs should be made by qualified service personnel.

CAUTION:
If a fire flares up when using the cooktop, turn off the convection microwave oven ventilation fan as it may spread the flames. The ventilation fan cannot manually turn off when automatically started from a heated cooktop. Turn off the Main circuit breaker located in the Load Center. This will help prevent flames from spreading into the microwave.

NOTE:
When dry camping, minimize using the inverter to operate the convection microwave oven due to the high rate of battery consumption.

NOTE:
The convection microwave oven is for food preparation only. Do not use the convection microwave oven to dry clothes, newspapers, shoes or other items.

INFORMATION:
For more detailed information and operating instructions, refer to the convection microwave oven OEM manual.

CAUTION:
Long-term use of the inverter to operate the convection microwave while in transit will damage the alternator. Use the generator to operate the convection microwave while in transit.

Care & Cleaning

The exterior of the convection microwave oven is plastic and metal. The interior is metal. Do not clean with scouring pads, harsh or abrasive cleaners, chemical cleaners or petroleum based thinners that can damage the finish. Use mild soap and water with a damp cloth or paper towel to remove stains or spills. When cleaning the touch pad, open the door to prevent accidental operation. Use mild soap and water with a soft cloth. Avoid using excess amounts of water on the touch pad. The turntable plate and oven racks are dishwasher safe.

Charcoal Filter:

Depending on use, the charcoal filter should be replaced every 6 to 12 months. Use the following procedure to remove the louvers to replace the charcoal filter and oven light:

- Remove power to the convection microwave oven.
- Remove screws (A) securing the louver.
- Insert a flat blade screwdriver over each tab pressing downward and move the louver away from the convection microwave.

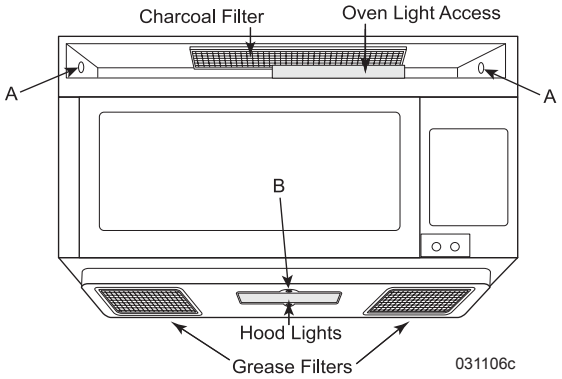

- Remove and replace the charcoal filter. Ensure the filter is positioned on the supporting tabs.
- Replace louver and mounting screws.

Oven Light:

- Remove the louver as previously indicated.
- Slide the metal light cover forward and lift upwards.
- Remove the light bulb and replace only with an equivalent watt bulb. Do not exceed 30 watts.
- Replace light cover, louver and mounting screws.

Hood Light:

- Remove power to the convection microwave oven.
- Remove the screw (B) securing the light cover.
- Remove the light bulb and replace only with an equivalent watt bulb. **Do not** exceed 30 watts.
- Close cover and re-secure with screw.

CAUTION:
Light cover may be hot. Do not touch glass with lamp on. Never use the light for prolonged periods, such as a night light.

Grease Filters:

Operating the convection microwave oven without the grease filters in place can damage the unit. Grease filters should be cleaned at least once a month. To remove the filters, use the pull-tab to slide the filter to the end of the opening and tip down.

Soak the filters in the sink or in a dishpan filled with hot water and detergent.

- Do not use ammonia or other alkali-based products that may darken the filter material.
- Agitate the filter. Use a scrub brush to remove caked on grease.
- Rinse the filter thoroughly and shake dry. Place the filter back into the opening, tip upward and slide filter to the end of the opening. Lock in place. Be careful not to kink or warp the filter upon installation.

Cleaning Tips:

- Turn the oven off before cleaning.
- Cover food while cooking to keep spattering to a minimum.
- Clean up all spills or spatters before they dry. Wipe up food spatters or spilled liquids with a damp cloth. Mild detergent may be used for stubborn spills. Do not use harsh detergent or abrasive cleaner.
- It is occasionally necessary to remove the glass tray for cleaning. Wash the tray in warm, sudsy water or in a dishwasher.
- The roller guide and oven cavity floor should be regularly cleaned to avoid excessive noise. Wipe the bottom surface of the oven with mild detergent water or window cleaner and then dry. The roller guide may be washed in mild sudsy water.

- Food odors may linger inside oven. To help eliminate odors, combine the juice and the peel from one lemon, several whole cloves and 8 oz. of water into a two cup bowl. Place in oven on high power; bring to a boil for several minutes. Let cool in the oven for several minutes.
- Clean the outside oven surface with soap and water. Wipe away any residue using a damp cloth. Dry with a soft cloth. To prevent damage to the operating parts inside the oven, do not allow water to seep into the ventilation openings.
- If the control panel becomes wet, clean with a soft, dry cloth. Do not use harsh detergents or abrasive when cleaning the control panel.

COOKTOP - PROPANE

The cooktop uses only propane as a fuel source. The burners use a piezo type igniter. The cooktop should be used for cooking purposes only and not as a heating source. When the burner valve is opened the fuel source flows through the valve into the mixture tube. The fuel passes by a hole or venturi in the mixture tube, which draws air in with the fuel for a proper fuel/air ratio. The flame should have a blue appearance with a lighter blue defined flame at the burner head.

A yellow flame or yellow tips indicate a rich fuel mixture that can leave a black color (carbon) on the bottom of a pot or pan.

The cooktop operates under the following conditions:

- Open the primary valve on the propane tank.
- Battery cut-off switch is on.
- House batteries are charged.

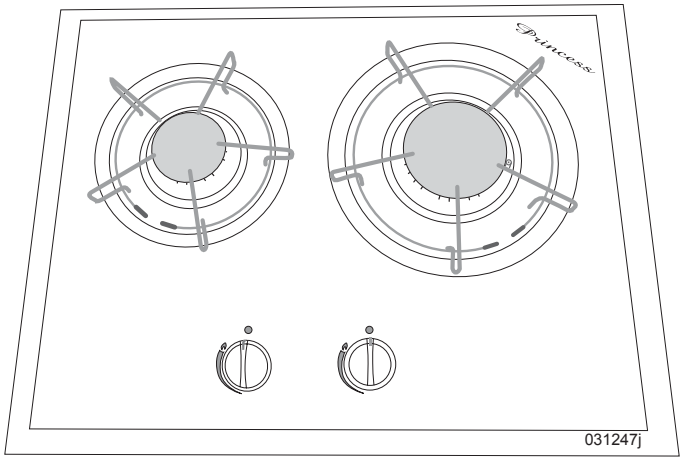

Propane cooktop

Using the Cooktop:

- Place cookware on burner grate over the desired burner.
- Push down and turn burner knob counterclockwise until burner lights. Do not attempt to light more than one burner at a time.
- When the burner lights, continue holding burner knob down for approximately 5 seconds or until burner remains lit.

INFORMATION:
For detailed cooktop information, operating instructions and safety refer the OEM manual.

WARNING:
Do not leave burners unattended during cooking. Do not leave burner valve(s) open while burner(s) are not lit. Propane is heavier than air and will settle on the floor and "hide" in corners. If a propane smell exits, extinguish all open flames. Open all windows and doors. Do not touch any electrical switches. They may cause a spark that can ignite. Evacuate the motorhome and shut off the primary propane valve. Liquid propane is highly volatile, highly explosive and extremely dangerous. Explosion, fire, property damage, injury or death can result. Contact a qualified service center to have the problem correctly diagnosed and repaired before resuming operation.

⚠ WARNING

IT IS NOT SAFE TO USE COOKING APPLIANCES FOR COMFORT HEATING.

Cooking appliances need fresh air for safe operation.
Before operation:
1.Open overhead vent or turn on exhaust fan.
2. Open window.

FAILURE TO COMPLY COULD RESULT IN DEATH OR SERIOUS INJURY.

020327

Operation Tips:

- A yellow flame is an indication of incorrect fuel/air ratio. Lowered BTU output and carbon build up can occur.
- When cooking at an altitude above 5,000 ft., the flame may change appearance and the flame BTU output will be lowered. Allow extra time cooking time.
- Do not allow the tips of the flame to extend beyond pan or pot edge. When this occurs heat is wasted and possibility of injury increases.
- Cooking time can be reduced if the least amount of liquid is used. The choice of cookware selected can make a big difference.

Safety

- Do not leave children alone or unattended in the galley area when the cooktop is in use.
- Never allow anyone to sit, stand or climb on any part of the range cooktop. Serious injury or burns could occur.
- Do not store items that children may want above the cooktop. Children can be burned or injured.
- Do not wear loose or hanging garments when using the cooktop.
- Use only dry pot holders. Damp pot holders on hot surfaces may result in burns from steam. Do not let pot-holder touch an open flame.
- Do not heat unopened containers. Containers could explode.

<u>CAUTION:</u>
Never leave the cooktop unattended.

Cooktop Covers

- Cooktop covers must be removed before using the cooktop.
- Do not place the covers on the cooktop while burners are lit.
- Do not use the covers as a griddle.
- The covers should be in place while the motorhome is in transit.

Burner Grate

The burner grate can be removed by squeezing the grate. Place on clean cloth to protect the countertop.

Care & Cleaning

Regularly wipe down the cooktop with a soft cloth and a warm detergent solution to keep it clean. Do not clean the cooktop with abrasive or harsh cleaners such as steel wool, bleach, ammonia or oven cleaner.

Use a dry paper towel or cloth to wipe up spatters or spills when the cooktop surface is still slightly warm. To avoid accidental burns, do not clean the cooktop when it is hot to touch. Do not allow food to bake on. Clean the surface burner grate and caps using the same guidelines as the cooktop surface.

Porcelain Enamel:

Sharp blows, radical surface temperature changes, etc., will cause enamel to chip or crack. Some foods, such as vinegar, lemon juice, tomatoes and milk, contain acids that can dull the finish of the enamel. To avoid dulling the finish, wipe up the spill before it is baked on.

Steel wool and course, gritty cleanser will scratch or mar the surface. Use gentle kitchen cleanser powder or grease cleaner. For further information on care and maintenance of the porcelain, call *Hopes Cultured Marble Polish* at 800-325-4026.

COOKTOP - ELECTRIC (OPTIONAL)

The electric cooktop operates from shore power or the generator.

To Use the Cooktop:

- Hook to shore power or start the generator.
- Press and hold All Off/Lock (approximately 2 seconds) until indicator lamp goes out. The cooktop is now ready for use.

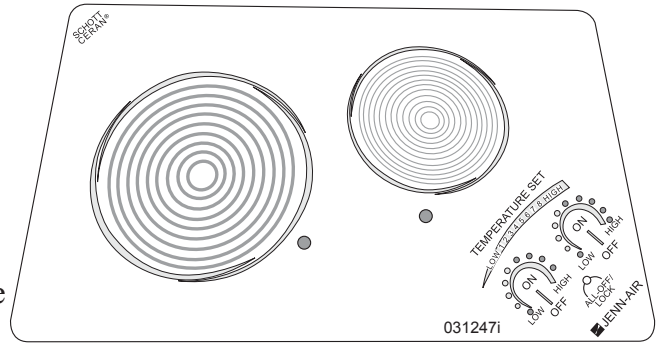

Electric cooktop

To Set Temperature:

- Press On then select a temperature between Low and High.
- A red indicator next to the element will illuminate when surface temperature is hot. The light will go out after surface temperature cools.

To Readjust Temperature:

- Press Off then On.
- Select a new temperature setting.

The cooktop can be locked out to prevent accidental usage.

- Press and hold the All Off/Lock (approximately 2 seconds) until indicator illuminates.
- The cooktop is now in the Locked position. Cooktop controls will not respond until the cooktop is unlocked.

Cleaning and Care

The cooktop surface is ceramic glass. Use caution when cleaning to avoid scratches. Allow the cooktop to cool sufficiently before cleaning. Clean spills promptly to avoid staining or baking stain onto surface. Try to avoid boil-overs. Special cleaning tools are available from the cooktop manufacturer to help remove baked on stains.

Do Not Use:

- Abrasive cleansers
- Bleach
- Rust removal cleanser
- Ammonia
- Abrasive cleaning tools such as Scotchbrite or steel wool.

What to Use:

- Use a clean wet cloth or wet sponge then dry thoroughly.

NOTE:
See the OEM manual for special cleaning instructions or to order cooktop cleaning tools.

AIR CONDITIONING - ROOF

Thermostat

The RV Comfort thermostat is located in the hallway area. The thermostat controls the HVAC (Heating, Ventilation, and Air Conditioning) system comprised of roof top air conditioners and the furnace. The thermostat controls HVAC functions: Cool, Off, Heat Mode and Zone.

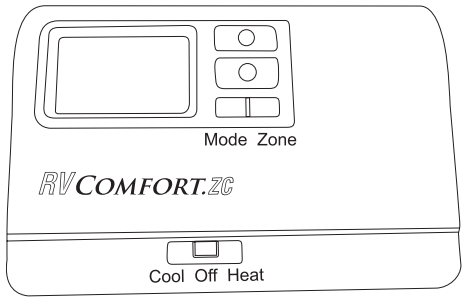

RV Comfort thermostat 031358

The RV Comfort thermostat must be On to operate any HVAC function. The motorhome is divided into operating zones (See Chart). The selected Zone will be indicated on the left side of the LCD display. Press the mode button to select the desired HVAC function then press the up or down buttons next to the display to adjust temperature. Room (zone) temperature is indicated on the right side of the display. Room temperature will change over to temperature set point when adjusting temperature. Due to ambient operating limitations in heat pump mode, the furnace may become the primary heat source.

	Zone 1:	Zone 2	Zone 3	Zone 4
COOL	L/Room A/C	Middle A/C	Bedroom A/C	
HEAT	Living Room	Kitchen	Bedroom	Bathroom

While in Heat Elec mode, if zone temperature and temperature set point is greater than 5º, the furnace will automatically become the primary heat source. Elec(tric) will continue to display with “Gas” flashing indicating the furnace is operating. The system will automatically switch back to heat pump operation (Heat Elec) when ambient temperature allows heat pump operation.

LCD Display

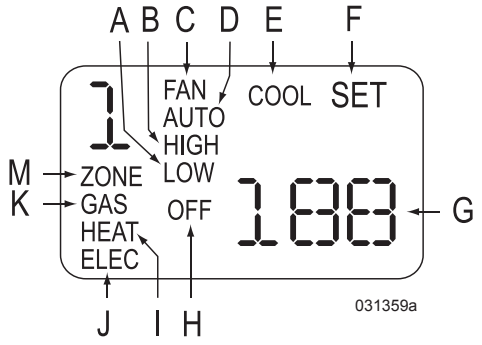

LCD Display

A. Fan speed Low.
B. Fan speed High.
C. Indicates Fan mode.
D. Fan speed Auto.
E. Indicates Cool mode.
F. Displays when temperature setting is adjusted.
G. Displays room temperature or temperature setting.
H. Indicates Off mode in selected zone.
I. Heat mode
J. Indicates Electric mode.
K. Indicates Gas (furnace) mode.
L. Indicates off mode in selected zone.
M. Identifies zone number.

NOTE:
Do not select conflicting modes of operation. One zone cannot be on Cool while another zone is set to Heat.

NOTE:
The motorhome will not heat or cool faster by selecting a very high or very low temperature setting.

Remote Temperature Sensor

Remote temperature sensors are located throughout the motorhome to ensure accurate temperature control.

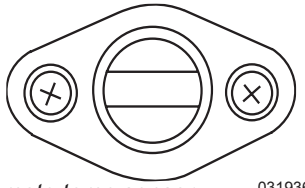

Remote temp sensor 0319360

Air Conditioning - Roof

The roof air conditioners operate from 120 Volts AC supplied by shore power or the generator. The wall thermostat requires 12 Volt DC to operate.

NOTE:
Due to the electrical load shed feature incorporated in the load center, the air conditioning system may be disabled when hooked to limited shore power service. Refer to the Load Center in Section 8 for more information.

NOTE:
The air conditioning system freezes moisture in the air. It is recommended to set the blower fan speed to high when operating in high humidity.

Operation Requirements:

- 120 Volts AC, from either shore power or the generator is supplied.
- The interior house power is on and the house batteries are charged.

Fan Operation Only

Fan mode circulates interior air by using the roof air conditioner blower. Temperature set point is not adjustable in fan mode. Fan speed can be set to Low or High.

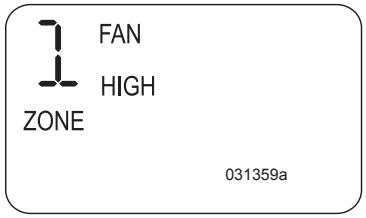

Example of fan screen

- Slide switch to Cool.
- Press the Zone button repeatedly to select desired zone.
- Press the Mode button repeatedly until only Fan High or Fan Low is displayed.
- Repeat process for each desired zone.

Air Conditioner Operation

Setting the thermostat to control air conditioner functions:

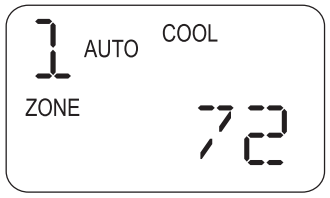

Example of A/C screen 031359a

- Slide switch to Cool.
- Press the Zone button repeatedly to select desired zone.
- Press the Mode button repeatedly until Cool is displayed.
- Set desired fan speed by pressing the Mode button repeatedly. Fan speed Auto (default setting in Cool mode) will vary fan speed dependant on disparity of temperature set point and actual zone temperature. If desired, fan speed can be set to Cool Fan High or Cool Fan Low.
- Set desired temperature by pressing the Up or Down buttons.
- Repeat process for each desired zone.

NOTE:
The compressor will engage approximately two minutes after blower motor activation to prevent accidental compressor operation against high pressure.

Heat Pump Operation

In Heat Pump mode the air conditioning principle is reversed, supplying heated air to the ceiling registers instead of refrigerated air. There are ambient temperature limitations in Heat Pump mode.

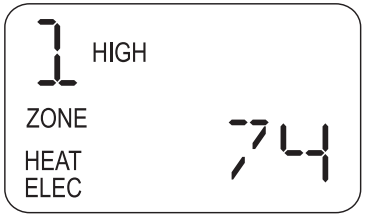

Example of heat pump screen

- Slide switch to Heat.
- Press the Zone button repeatedly to select desired zone.

- Press the Mode button repeatedly until Heat and Elec is displayed.
- Set desired temperature by pressing the Up or Down buttons.
- Repeat process for each desired zone.

NOTE:
Fan speed is not adjustable in heat pump mode.

NOTE:
The roof air conditioner will not operate in heat pump mode in cold ambient temperature (approximately 46° F.). If zone temperature and temperature set point is greater than 5º, the furnace will be used as the primary heat source until temperature disparity is less than 5º.



Example of heat pump screen in backup furnace mode. 031359a

Air Conditioner Maintenance

Return Air Filters:

Frequently clean the return air filters. The filters are located behind the return air vent cover.

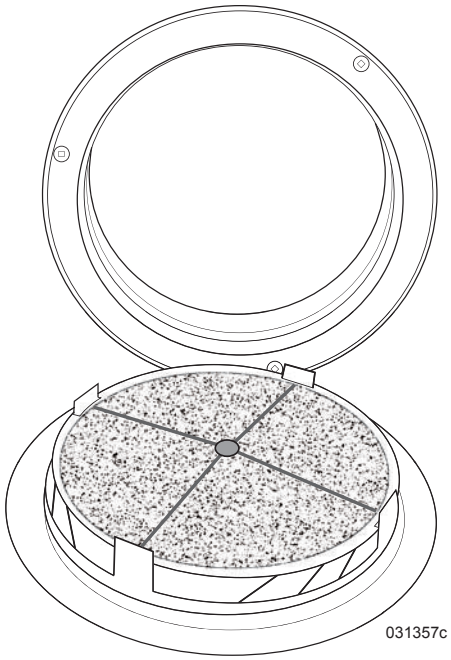

Return intake vent

To Remove Vent Covers:

- Pull down on intake filter cover.
- There are 2-6” vent covers per roof A/C.
- Spread tabs apart to remove filter retainer.

To Clean the Return Air Filters:

- Wash filters in warm soapy water. Do not use solvents.
- Rinse filters thoroughly with fresh water. Allow them to dry.
- Install filters and snap intake vent covers in place.

Mounting Bolts:

The AC mounting bolts should be re-torqued every six months. Four bolts are located behind the return air filter. Torque the mounting bolts to approximately 40 to 50 in. lbs. The base gasket should be compressed to approximately ½".

AC Cover Screws:

Use a screwdriver to ensure the AC cover screws are tight whenever the roof is accessed.

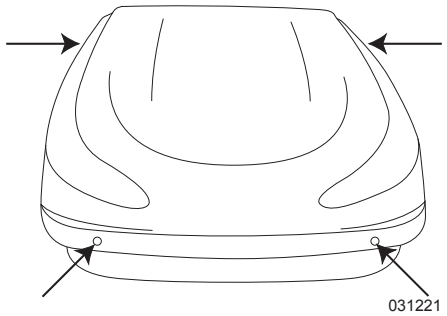

Ensure the A/C cover screws (location as illustrated by arrows) are tight when the roof is accessed.

AQUA-HOT - MODEL 400D

The Aqua-Hot appliance is a water heater and furnace combined. A 12 Volt DC diesel fired burner and/or a 120 Volt AC element (1650 watts) is used to heat a 50/50 solution of propylene glycol antifreeze and water. The heated antifreeze solution is circulated through heat exchangers to provide interior heat. Potable water is heated by the Aqua-Hot for domestic use. The Aqua-Hot control switches are located on the monitor panel.

NOTE:
Antifreeze is propylene glycol based boiler antifreeze. Do not mix or substitute with automotive antifreeze.

NOTE:
The Aqua-Hot must be turned on to supply heat. Select either diesel or electric (or both) mode of operation.

Diesel Burner:

The Aqua-Hot consumes approximately .4 gallons of diesel fuel per hour of continuous burner operation. Recovery rate is faster when operating on diesel versus AC electric operation. To heat the Aqua-Hot with the diesel burner, press the Diesel switch. The Active indicator will illuminate when the Aqua-Hot diesel switch is on. The burner will need to operate for approximately 20 minutes before maximum heat is available for interior heating or hot water.

Zone 1:	Zone 2	Zone 3	Zone 4
Living Room	Kitchen	Bedroom	Bathroom/ Water Center

Zone chart

WARNING:
Carbon Monoxide hazard! Do not operate the diesel burner when the motorhome is located inside a building or in confined areas where exhaust gases may not disperse adequately. Lethal levels of Carbon Monoxide can accumulate.

Aqua Hot Operation – Diesel

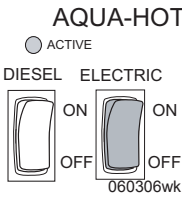

- Turn on interior house power.
- Press the Aqua-Hot Diesel switch.
- Slide thermostat switch to Heat.
- Press the Zone button repeatedly to select desired zone. Refer to Zone Chart.
- Press the Mode button repeatedly until Gas is displayed for each zone of operation.
- Set desired temperature on thermostat by pressing the Up or Down buttons.
- Repeat process for each desired zone.

NOTE:
Do not set the thermostat to conflicting modes of operation such as setting one zone to Cool with another zone is set to Heat. Operating mode in any zone must be set to heat (or off) for the Aqua-Hot and thermostat to function properly.

Electric Heat Element:

The Aqua-Hot has a 1650 watt heating element. If shore service is limited to 30 Amps or less, it is recommended to operate the Aqua-Hot using the diesel function to avoid electrical overload of shore power. While the generator can power the electric element, it is not fuel efficient to do so.

Preheat time is longer and recovery rate is slower when using the electric element. The Aqua-Hot electric switch is located on the monitor panel.

Aqua Hot Operation – Electric

- Hook to shore power.
- Turn on interior house power.
- Press the Aqua-Hot electric switch. The switch will illuminate when on.
- Slide thermostat switch to Heat.
- Press the Zone button repeatedly to select desired zone. Refer to Zone Chart.
- Press the Mode button repeatedly until Gas is displayed for each zone of operation.
- Set desired temperature on thermostat by pressing the Up or Down buttons.
- Repeat process for each desired zone.

Interior Heat Exchangers:

Heat exchangers are located throughout the motorhome and in the water service center. The heat exchangers are small radiators equipped with 12 Volt DC blower motors. Depending on the zone selected for operation and temperature set point, the blower for an exchanger will operate until the temperature set point is reached or until the mode for an operating zone is turned off. Blower speed for the private bathroom is adjustable to help compensate temperature output.

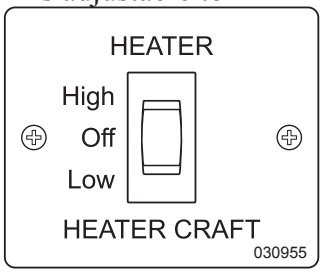

Located in private bath

To Heat the Interior While Traveling:

- Turn on interior house power.
- Press the Aqua-Hot Diesel switch.
- Slide thermostat switch to Heat.
- Press the Zone button repeatedly to select desired zone. Refer to Zone Chart.
- Press the Mode button repeatedly until Gas is displayed for each zone of operation.
- Set desired temperature on thermostat by pressing the Up or Down buttons.
- Repeat process for each desired zone.

NOTE:
Comfort heating can still be used in transit if the Aqua Hot has been winterized.

Troubleshooting

Should the Aqua-Hot System fail to operate, complete the following checks:

1. Verify the Aqua-Hot front cover is properly installed. The Aqua-Hot will not function if the front cover is not properly installed or removed.
2. The diesel burner will not operate if fuel level is at or below ¼ tank.
3. Ensure the coolant reservoir has an adequate supply of coolant. The reservoir is located next to the Aqua-Hot.
4. If the indicator light on the Aqua-Hot diesel switch does not illuminate, and the diesel burner is not functioning, the electronic controller may indicate a fault.

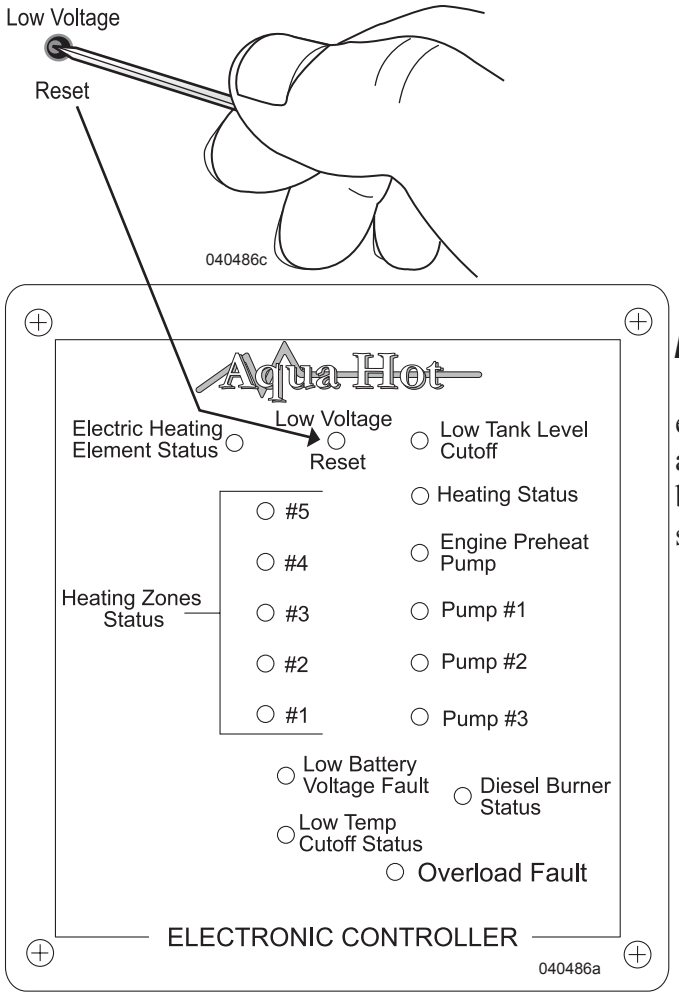

Electronic controller located in Aqua-Hot bay

Check the controller for any Red lights indicating a fault condition.

If the Low Voltage Reset LED is illuminated, charge the house batteries then reset the controller by pressing the reset button or cycling the Diesel switch off then back on. Check for loose wire connections on the electronic controller terminal strips/plugs.

5. Electronic Controller Diagnostic: Green LED lights indicate the system is operating and functioning normally. A Red LED indicates a system fault.
6. If a fault exists, indicated by a Red LED illuminated, refer to Aqua Hot OEM manual for further information.

Bay Thermostat

An adjustable thermostat turns on the heat exchanger in the water center to help protect against freezing. Thermostat temperature can be adjusted to suit needs. It is recommended to set the exterior thermostat to about 40º F.

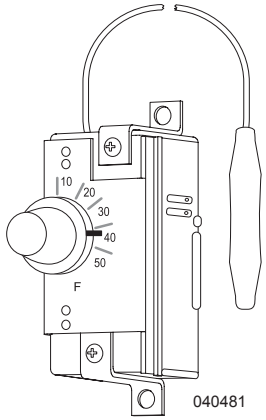

Aqua-Hot thermostat

Maintenance

Heat Exchanger:

Exchangers can be clogged by pet hair and other debris, reducing heating performance. The exchangers require a minimum semi-annual cleaning of the heating fins, blower fans and register box. Clean the area around the exchanger to reduce reoccurrence of buildup. A vacuum cleaner works well for cleaning the exchanger and surrounding area.

NOTE:
Turn the thermostat to the Off position when cleaning the exchangers.

Cleaning the Exchanger:

Exchangers can be located under the sofa, behind cabinets or under false floors in base cabinets. Access may be limited. Use caution to not puncture coolant lines or exchanger core. Gently remove retaining screws. Set fans to the side.

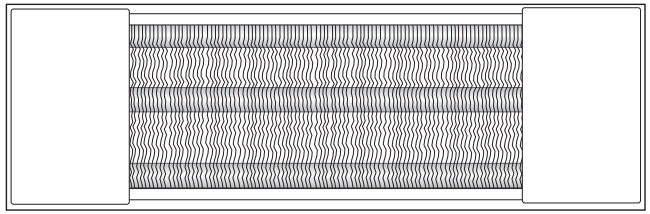

Typical Heat Exchanger 040646c

Vacuum debris and hair from inside of register. Use care not to bend or disfigure fins on exchanger. Vacuum fans then wipe clean with a soft cloth or paper towel. Reinstall fans and registers. Clean wood or metal vents in front of heat register with a soft cloth or vacuum attachment.

Coolant:

The coolant is a special "boiler type" propylene glycol base coolant. It has low silicate content with corrosion inhibitors and heat transfer compounds. This type of antifreeze provides freeze protection and excellent heat transfer for operating efficiency.

The coolant is mixed 50/50 with de-ionized water (water purified by reverse osmosis). Do not mix with automotive antifreeze as this can cause scaling and possible component failure. The coolant can be purchased directly from Vehicle Systems Inc.

CAUTION:
Use only non-toxic propylene glycol based coolant recommended for boiler applications. The coolant is FDA approved GRAS (Generally Recognized as Safe by the FDA). To obtain the recommended antifreeze, contact Vehicle Systems Inc. at 1-800-685-4298.

Reservoir:

The coolant reservoir is located in the curbside bay with the Aqua-Hot. Check the reservoir level monthly. The proper coolant level should be at the Full Hot level when the diesel burner has just shut off.

If necessary, add coolant to the reservoir only when the Aqua-Hot has achieved operating temperature to prevent overflow when the system cools.

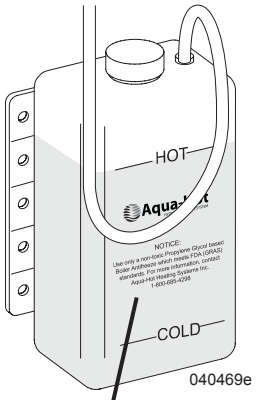

040469e

NOTICE
Use only a non-toxic Propylene Glycol based boiler antifreeze that meets FDA (GRAS) standards. For more information, contact Aqua-Hot Heating Systems Inc. 1-800-685-4298

Disinfecting:

The tubing inside the Aqua-Hot is rated for fresh water and winterizing solutions. The Aqua-Hot domestic water loop can be disinfected periodically by flushing a disinfecting solution through the Aqua-Hot. The disinfecting solution must be thoroughly rinsed otherwise damage to the Aqua-Hot domestic water loop can occur.

CAUTION:
If not properly and thoroughly rinsed, bleach or other concentrated chlorine bearing chemicals can cause failure of the domestic water loop inside the Aqua-Hot.

CAUTION:
Disconnect all sources of power before cleaning or servicing.

Winterize the Aqua-Hot

The Aqua-Hot can remain on during the winter months. If the motorhome is to be winterized and stored over the winter with the Aqua-Hot turned off, the Aqua-Hot domestic water loop must be winterized with FDA approved RV antifreeze to prevent freeze damage.

FDA approved RV antifreeze must be pumped through the Aqua-Hot until the solution appears at the hot water side of a faucet. The on-board water pump can be used (see illustration) to purge water from the Aqua-Hot domestic water loop.

Refer to the Aqua-Hot owner's manual for complete winterizing instructions. If the system is operating from AC electric and a power outage occurs, extensive damage to the Aqua-Hot may occur.

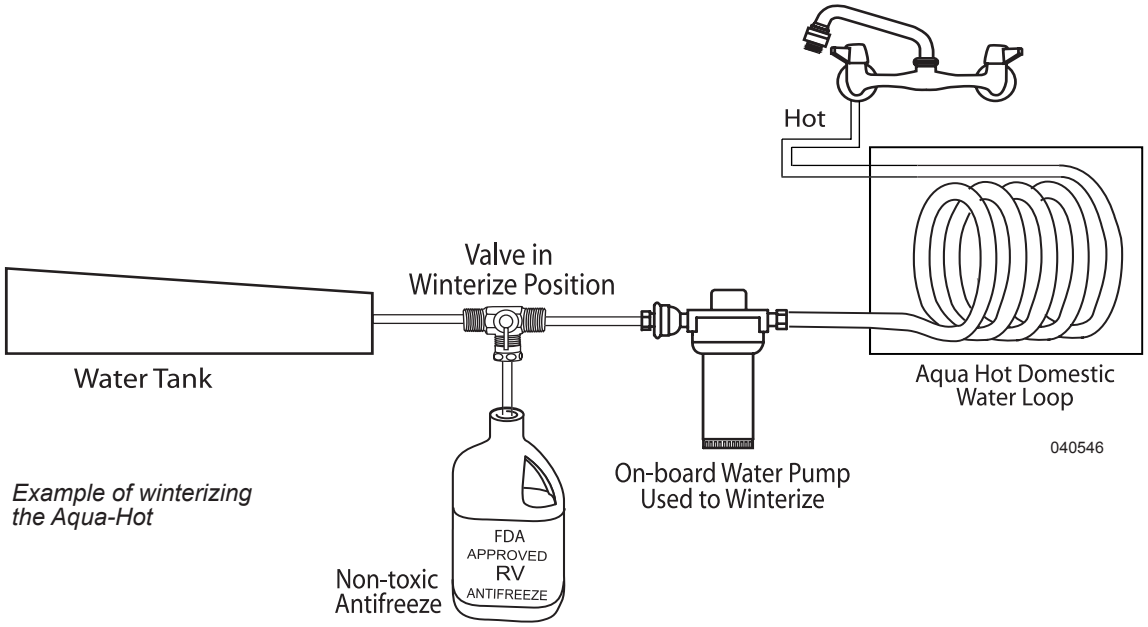

Example of winterizing the Aqua-Hot

CAUTION:
If the motorhome is hooked to shore power during the winter months and the Aqua-Hot is operating on the electric element, a temporary power outage can allow the system to freeze resulting in damage.

NOTE:
Comfort heating can still be used during transit if the Aqua Hot has been winterized.

Annual Tune Up

The Aqua-Hot requires an annual tune up consisting of a fuel nozzle, fuel filter replacement and a thorough cleaning of the combustion chamber. A tune up will allow service personnel to inspect for additional wear of other components.

Signs that the Aqua-Hot may need servicing are continuous white exhaust smoke, poor ignition start up or loss of heat output. When in operation, the Aqua-Hot should have a smooth, high-pitched whine. Loud growls or other abnormal noise indicates service or repair is required.

Fuel Filter Replacement:

The fuel filter is located in a curbside bay with the fuel tank. As a guideline, change the filter annually or at the first indication of heat loss. It is recommended to carry an extra filter as one tank of contaminated fuel can plug a fuel filter. Replacement filters must have a 10-micron rating.

To Replace the Filter:

- Ensure the Aqua-Hot Diesel switch at the galley is turned off.
- Spin the filter counterclockwise and remove from head. Remove old O-ring gasket.
- Install new O-ring supplied with filter. Ensure the gasket is seated in the groove around the filter canister.
- Apply clean lubricating oil to the new filter gasket.
- Spin filter onto head until filter makes contact then tighten an additional ¾ of a turn. Do not over-tighten.
- Start the Aqua-Hot and check the fuel filter for leaks.

NOTE:
It may be necessary to cycle the diesel burner switch on and off a few times to thoroughly purge the fuel system of air.



Aqua-Hot Fuel Filter: Use with #1 or #2 Diesel fuel.

Gar-ber Filter Number:
Model #R, 10 micron.

Internal Diagram

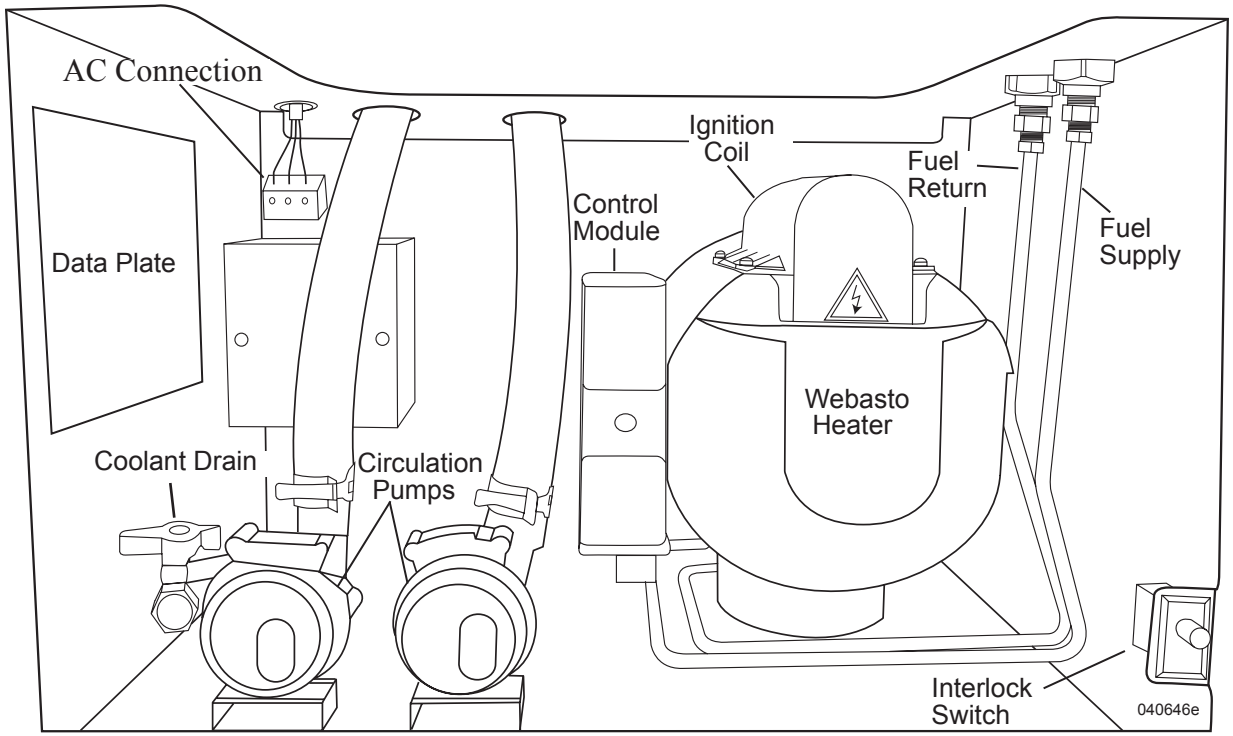

WASHER-DRYER PREPARED

If the motorhome was not ordered with a washer-dryer, it will have a washer-dryer preparation package installed from the factory. The washer-dryer "prep" package includes the following items:

- Color coded water supply lines. A red line for hot; a blue line for cold.
- A 1½" water drain line with threaded cap, P-Trap and an automatic vent cap.
- A 120 Volt receptacle located in the compartment.

NOTE:
Sidewall dryer vents are not part of the prep package. If a sidewall vent is to be installed, properly seal vent to sidewall.

If a washer-dryer is to be installed at a later date, follow the manufacturer's installation instructions. Further instructions for safe and reliable operation:

- Do not connect the clothes dryer exhaust duct to any other duct, vent or chimney.
- Do not terminate the exhaust duct beneath the motorhome.
- Use proper length fastener when attaching exhaust vent to exterior sidewall. Stainless steel fasteners are best as they will not rust.
- If the cabinet or closet in which a washer-dryer is installed does not have vented louvered doors, the manufacturer's installation instructions may require installation of vents for sufficient circulation of air.

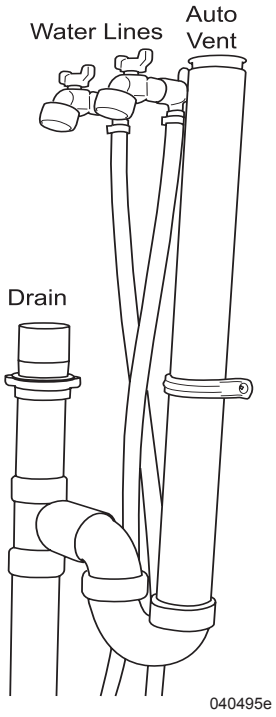

WASHER/DRYER STACKED (OPTIONAL)

Washer

The front-loading washer is a large capacity washer that operates on 120 Volts AC from shore or generator power. Water usage will vary with each load, and fill time will vary depending upon water pressure.

CAUTION:
Hook the motorhome to shore services when using the washing machine due to limited fresh water supply and grey tank capacity.

CAUTION:
Do not use the washer while traveling as damage will occur to the washer and motorhome.

INFORMATION:
The washer has many features. Refer to the manufacturer's manual in the owner's information file for detailed operating instructions.

Test Cycle

Before using the washer for the first time, or after a long period of non-use, run a test cycle. The test cycle will confirm the unit is working correctly, remove RV antifreeze that may be present, and verify all hardware, plumbing and electronic components are functioning.

Test cycle requirements:

- Wipe the exterior and interior of the unit with a damp cloth to remove accumulated dust.
- Ensure water lines are secure and all necessary valves are open to supply water.
- Hook to city water or turn on the water pump (must have sufficient water in tank and storage space in holding tanks).
- Hook up to shore power, or turn on the generator.

Conducting test cycle:

1. Add ½ tablespoon of detergent to the detergent chamber (#1 in illustration) of the automatic dispenser.

CAUTION:
Ensure the automatic dispenser is in place before starting the washer. Do not open the automatic dispenser when the washer is running.

2. Close the detergent dispenser.
3. Turn the cycle knob to **#15** (light load).

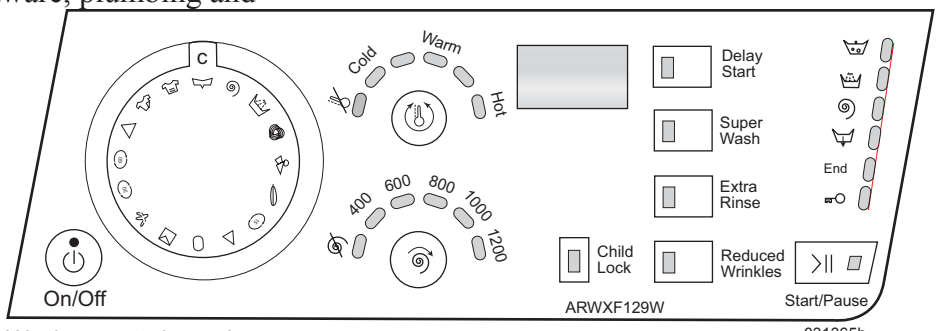

Washer control panel

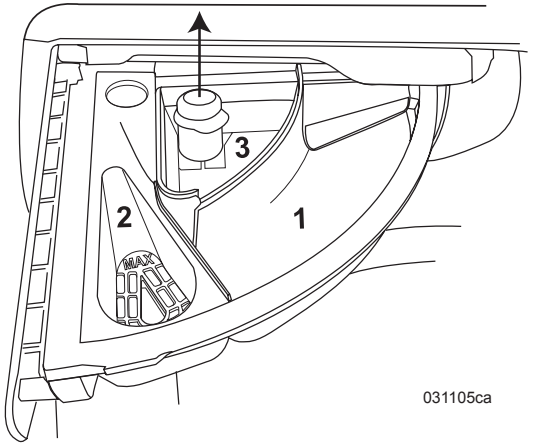

Detergent trays are removable for cleaning

4. Set the temperature knob to warm (rinse is always cold).
5. Set a spin speed between 400-1200.
6. Press On/Off button to turn on the machine. Press and hold to turn off.
7. Press Start/Pause to start cycle. Press again to stop.
8. The door lock light (key symbol) will turn off when the cycle is complete.

Operating Instructions

1. Load the machine and ensure door is closed and firmly latched. See OEM manual for load types and weight limits.
2. Set the cycle knob to the appropriate wash program. See OEM manual for recommendations.
3. Adjust temperature with temperature knob (rinse is always cold).
4. Adjust spin speed according to garment type.

5. To further customize the wash program, press one of the wash option buttons (Soaking, Extra Rinse, etc.). See OEM manual for more information.
6. Open dispenser drawer and add appropriate cleansers and softeners. Close dispenser door.
7. Press Pause/Start button to start cycle.
8. The door lock light (key symbol) will turn off when the cycle is complete.

Cleaning the Washer

Clean the exterior, interior and automatic dispenser as needed.

Exterior:
- Clean the exterior with a soft cloth dipped in lukewarm, soapy water. Never use polish of any kind.

Interior:
- To remove build-up, run the washer through a complete cycle using hot water and two cups of non-precipitating water softener.
- Apply paste wax periodically to the inner door to prevent staining.

Automatic Dispenser:
- Remove the inner portion of the dispenser tray by pulling up and out.
- Rinse under warm water until buildup dissipates.

Winterizing the Washer

To Winterize:
- Ensure the washer is off, and pour 1 pint of FDA approved RV antifreeze into the washer drum.
- Close the door and turn the cycle knob to a spin cycle.
- Press the on/off button and wait one to two minutes.
- Press the on/off button to turn washer off.
- Disconnect power supply and turn water faucets off.
- Disconnect and drain inlet hoses.

To De-winterize:
- Connect inlet hoses and turn water faucets on.
- Connect power supply.
- Add ½ tablespoon of detergent to the dispenser detergent compartment (#1).
- Turn cycle knob to **#15**, and let the washer run through the complete cycle to ensure all antifreeze is purged.

CAUTION:
Replace inlet hoses every five years.

INFORMATION:
See the OEM manual for more detailed instructions and maintenance procedures.

Dryer

The front-loading dryer operates on 120 Volts AC from shore power or the generator.

INFORMATION:
Read the instructions in the dryer OEM manual located in the owner's information file.

NOTE:
Due to the automatic load shed feature in the load center, power to the dryer may be disabled until sufficient AC power is available. See "Load Center" Section 8 for more information.

NOTE:
Clean the lint screen (located inside the dryer door) after each use. Keep the exhaust opening and adjacent areas free from accumulation of lint, dust and dirt.

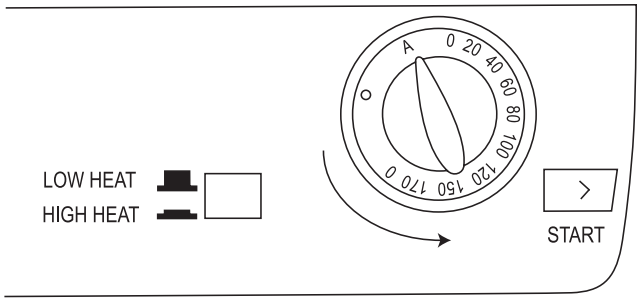

Dryer control panel 031366

CAUTION:
Open a window or vent while operating dryer. Negative air pressure inside the motorhome can be dangerous while operating fuel burning appliances.

CAUTION:
Do not use the dryer while the motorhome is in motion as it can damage internal components of the dryer.

CAUTION:
Do not dry articles that have previously been cleaned, washed, soaked or spotted with gasoline, dry cleaning solvents or other flammable or vaporous substances that can ignite or explode. Do not use heat to dry articles containing foam rubber or similar textured, rubber-like materials.

Operation

1. Load laundry loosely into dryer and close the door. Allow space for the clothes to tumble freely.
2. Select appropriate cycle and heat (see OEM manual for detailed instructions).
3. Press the Start button to initiate the cycle.
4. Open the door to stop the dryer at any time.

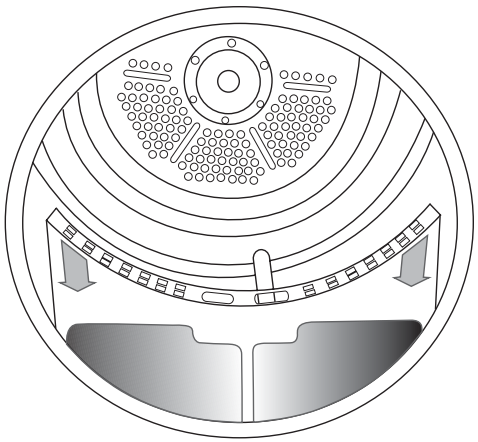

Lint filter removal 031366b

NOTE:
Timer knob rotates only counterclockwise.

Dryer Maintenance

Clean the exterior and interior as necessary, and clean the lint filter after each load.

Lint Filter:
- Open the door and pull the lint filter upwards.
- Remove lint and replace the filter.

CAUTION:
Do not operate the dryer without the filter in place.

Exterior:
Clean with a soft, damp cloth. Do not use solvents or abrasives.

Interior:
Do not use abrasives, steel wool or stainless steel cleaning agents to clean the dryer drum. Discoloration from fabric softeners and water is normal and does not affect dryer operation.

Technical Service:
For detailed technical service contact Splendide at 1-800-356-0766.

CENTRAL VACUUM (OPTIONAL)

Operation

INFORMATION:
Refer to the vacuum OEM manual for detailed operation and maintenance.

- Hook to shore power or start the generator.
- Lift lid on wall receptacle to start vacuum. Insert the hose.
- Connect desired attachment on hose.



031264f
Inlet located in living room or bathroom area.

Floor Receptacle:
- Push handle to open receptacle.
- Sweep debris into the receptacle.

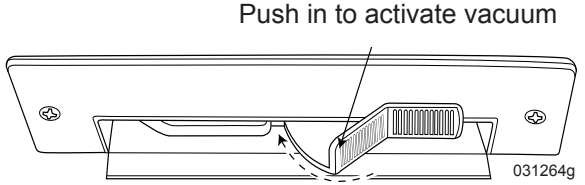

031264g

Maintenance

The vacuum has a thermal protector built into the motor to prevent overheating. If the motor will not operate, it will automatically reset in about ½ hour. If motor brushes or bearings are worn out, the circuit protector will trip again after a short period of operation. If this happens, contact a qualified service representative.

Changing the Bag:

To maintain vacuum efficiency, change the filter bag at regular intervals. Replace filter bag when it is about ¾ full.

- Unplug the power unit from outlet.
- Rotate bag cover counterclockwise and remove cover.
- With a finger on each side of the inlet, slide the bag off the inlet tube.
- Pull the center cardboard tab to automatically seal the bag and prevent dust leakage.
- Remove the bag from the vacuum and discard. Do not reuse.
- Check support (motor) filter.
- Unfold the new "OX" bag and insert into the vacuum so the center cardboard seal tab is toward bag cover. The top arrow should point to the bag cover.
- With a finger on each of the cardboard tabs, slide the bag on the inlet tube.
- Line up the mark on the bag cover with the unlock symbol and rotate clockwise to lock symbol.

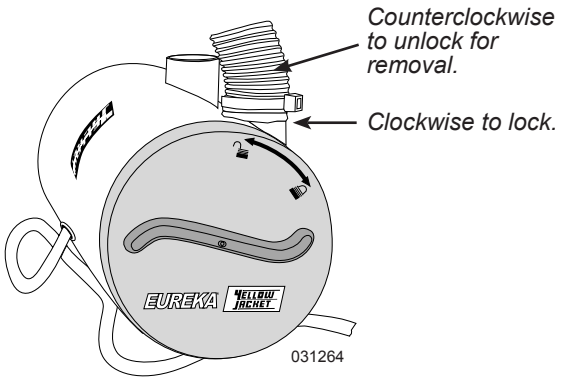

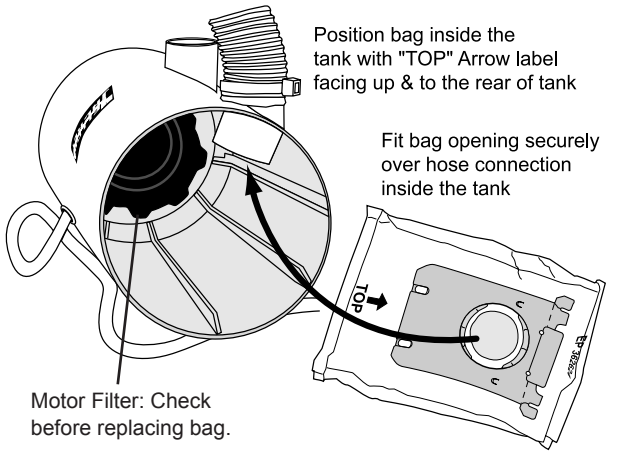

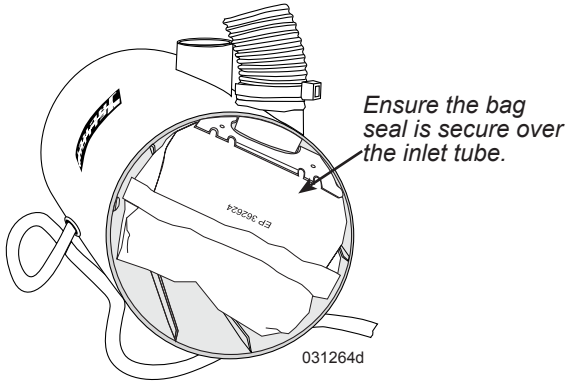

INFORMATION:

Replacement bag is "OX". Bag is accurate of time of printing. Confirm part number/letters before ordering or obtaining replacement.

Cleaning the Motor Filter:

- Inspect during each bag change. The filter should be cleaned about every fifth bag replacement or when excessively dry.
- Remove dust bag as previously instructed.
- Motor filter is located at the bottom of the bag compartment. Replace torn or obstructed filters.
- Clean filter with warm water.
- Let air dry.
- Reinstall dry motor filter before use. Be sure filter is tucked under retaining tabs.
- Reinstall dust bag.

WARNING:

To reduce the risk of fire, electric shock or injury:

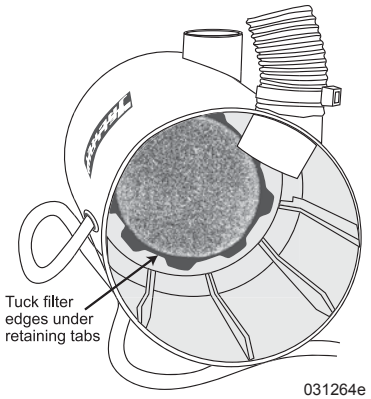

- Unplug and disconnect power before servicing.
- Avoid wet surfaces.
- Use only manufacturer recommended attachments.
- Do not use without dust bag and/or filters in place.
- Do not pick up anything that is burning or smoking, such as cigarettes, matches, or hot ashes.
- Use extra care when cleaning on stairs.
- Do not use to pick up flammable or combustible liquids such as gasoline.

FIREPLACE ELECTRIC (OPTIONAL)

The fireplace operates on 120 Volt AC supplied by shore power or generator and produces heat using interior lamps. At initial start or if the fireplace has not been used for a while, the fireplace may emit a slight odor caused by heating of internal parts. Follow the recommendations to reduce the risk of fire, electrical shock or injury.

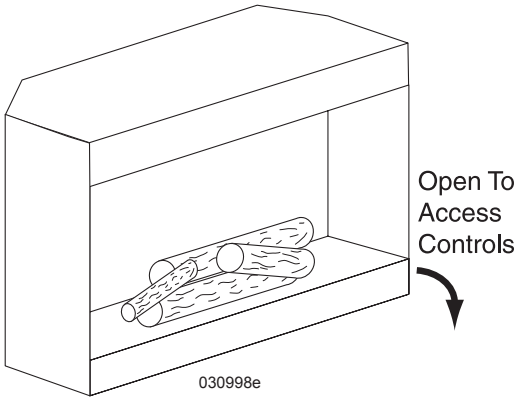

Dimplex fireplace

Recommendations:

- Read all instructions prior to using the fireplace.
- The fireplace is hot while in use.
- Do not touch as surfaces are hot.
- Keep combustible materials, such as furniture, pillows, bedding, paper, cloth etc. at least 3 feet from the front of the unit.
- Use caution when operating the fireplace with children or handicapped persons.
- Do not leave the fireplace unattended.
- To prevent a possible fire, do not block air intake or exhaust.
- Do not store gasoline, paint, or flammable liquids near the fireplace.
- Do not modify the fireplace. Use only as described. Any other use not recommended by the manufacturer may cause fire, electric shock or injury.
- Do not burn wood or other materials in the fireplace as there is no chimney flue.
- Do not strike fireplace glass.
- Disconnect power before cleaning or maintenance.

INFORMATION:
Consult fireplace OEM manual for detailed maintenance and operating instructions.

Operation

- Open the panel to access manual controls.
- On/Off Switch: Set the on/off switch to the (**I**) position. Position (**II**) is for use with a remote control (not all units).

Flame Action:

- Turn the flame action control knob to adjust flame speed to the desired level.

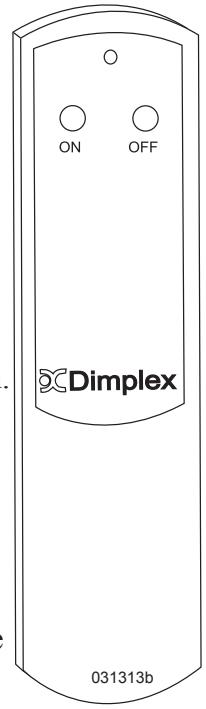

Light Dimmer Control:

- Turn the knob to increase or decrease brightness of the flame and embers.

Heater On/Off switch:

- Supplies power to heating unit when main On/Off switch is On.

Heater Thermostat Control:

- Turn the thermostat control clockwise to increase temperature setting or counterclockwise to decrease temperature setting.

Thermal Over-temperature Switch:

- The fireplace is equipped with a thermostat to control room temperature. In the event the fireplace overheats, an automatic over-temperature switch will turn the fireplace off.
- The fireplace can be reset by switching the On/Off switch to off and waiting five minutes before turning the fireplace back on.

CAUTION:
Discontinue use and contact a service technician if frequently resetting the fireplace.

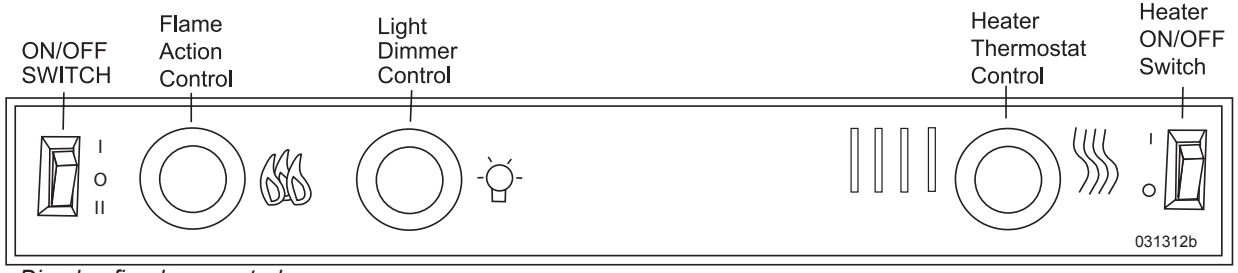

Dimplex fireplace controls

Light Bulb Replacement:

Light bulbs should be replaced when a section of the flame is dark or when clarity and detail diminishes. Two bulbs at the top of the opening illuminate the log exterior. Four bulbs under the log simulate flames and embers.

- Remove the trim by pulling straight forward.
- Hold glass in place while removing retaining top clip.
- Lift glass out and store in a safe place.

WARNING:
To reduce the risk of fire or electric shock, turn off circuit breaker before maintenance or cleaning.

CAUTION:
Use care when handling the glass. Safety glass may break if bumped, struck or dropped.

NOTE:
Do not exceed 60 watts per bulb. Verify brand and size of bulb before obtaining replacements. Allow at least five minutes for bulbs to cool before touching.

TIP:
Replace all bulbs if they are close to the end of rated life. To Open the Light Bulb Area:

Equipment
Section 5

EQUIPMENT - INTRODUCTION 106
ENTRY STEP 106
Operation 106
Maintenance 106
Step Cover 107
Stepwell Storage 107
GRAB HANDLE 107
ENTRY DOOR 107
Keyless Entry 107
SLIDEOUT OPERATION 108
Extending & Retracting Slide Rooms 108
Lock Bar 109
Troubleshooting 109
Manual Override – Living Room 110
Manual Override - Bedroom 113
AWNINGS 113
Slide-out Cover 113
Rain Water 114
Front Door Awning 114
Window Awning 114
Patio Awning 115
Awning Care & Cleaning 115
Storm Precautions 116
FANS 116
Automatic 116
BEDROOM CEILING FAN (OPTIONAL) 117
SOLAR SCREEN & BLACKOUT SHADE 117
Cockpit 117
DOOR - SLIDING 117
SEAT CONTROLS 117
Swivel Seats 118
SOFA 118
Jack Knife Sofa 118
Hide-A-Bed (Optional) 119
Hide-A-Bed Air Mattress (Optional) 119
Select Comfort Air Mattress (Optional) 120
STORAGE - UNDER BED 121
LADDER - REAR (OPTIONAL) 121
STORAGE BAY SLIDE-OUT TRAY (OPTIONAL) . 121
DASH RADIO 121
Steering Wheel Controls 122
Radio Switch 123
Satellite Radio (Optional) 123
GPS NAVIGATION (OPTIONAL) 123
TV ENTERTAINMENT COMPONENTS 123
Television (Front) Lockout Feature 123
TV Antenna 123
Cable TV, Satellite & Phone Connection 124
Front TV Operation 124
Exterior Entertainment Center (Optional) 126
Bedroom TV Operation 127
SATELLITE SYSTEMS - PREWIRE 128
Living Room Prewire 128
Bedroom Prewire 128
KVH R5 (Optional) 129
Winegard Trav'ler (Optional) 130
Satellite Wiring 130
SYSTEMS CONTROL CENTER 131

EQUIPMENT - INTRODUCTION

This section covers the basic operation and care of equipment found in the motorhome. More detailed information about specific equipment may be found in that particular OEM manual. Optional equipment will also be discussed in this section that may not apply to all motorhomes.

INFORMATION:
Detailed information with CAUTION or WARNING instructions for the various electronics, other than what is provided in this section, can be found in that specific OEM manual.

ENTRY STEP

Operation

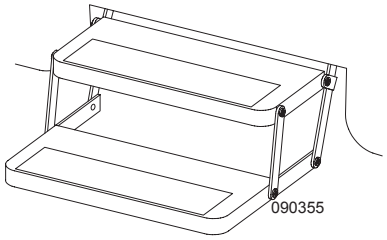

The exterior electric entry step will extend and retract with door opening and closing, automatic retraction with the ignition key in the run position and a "last out" feature. The entry switch illuminates when turned on.

NOTE:
When dry camping, it is important to note that when the switch is illuminated all step circuits are active and drawing current from the chassis battery.

NOTE:
The chassis battery disconnect switch must be on for the entry step to operate.

Entry Step Operation:
With entry step switch on, the step will extend and retract when the entry door opens and closes.



Cancel Step Operation When Parked:
Open door to extend step. Turn entry step switch off. Entry step will remain extended.

Last Out Feature:
Turn the ignition off and open the door. The step will extend. This is the "last out" feature.

Ignition Override:
When the ignition is on, the step will extend and retract with door movement with the entry step switch off. This ensures the step will not be extended during travel and will extend when the door is opened.

WARNING:
The entry step will retract when the ignition switch is turned on. Always confirm the entry step is fully extended and locked in position prior to exiting the motorhome.

CAUTION:
High curbs can impede step operation. Use care when parked on side streets.

WARNING!

This vehicle is equipped with an automatic electric step. Turning the ignition switch to the "ON" position while the vehicle is parked will cause the step to retract. Visually confirm that the step is fully extended prior to exiting the vehicle.

BE SAFE - LOOK BEFORE YOU LEAP! 020325

If the entry step fails to operate:
- Verify that the entry step switch is on.
- Check the main power supply for the step: a 25 Amp fuse located in the roadside front electrical panel.
- A magnetic door jam switch is used to control step operation. Use a separate magnet to apply a "trigger" to the door jam switch. Rotate test magnet to align polarity field.

WARNING:
If the motorhome is driven with the step in the extended position, damage could occur to both the step and the motorhome.

CAUTION:
Keep fingers, clothing and other hardware away from moving components.

Maintenance

The steps are equipped with self-lubricating bushings in the drive assembly and step joints and require no maintenance. If in extreme weather conditions and lubrication is deemed necessary a silicon based grease or spray can be used on the bushings.

INSPECTION:
Clean and inspect step more frequently in adverse weather conditions. Mud, snow, road salts and sand could quickly break down lubricant and corrode painted surfaces.

WARNING:
Step repairs should be performed by a qualified technician. Failure of the step to extend can result in serious injuries.

Step Cover

An electrically operated stepwell cover will extend and retract using the switch on the center console.

To Operate the Stepwell Cover:

- Chassis Battery Disconnect must be on.
- Press and hold the Step Cover switch to the desired direction. Release the switch to stop movement.

CAUTION:
When operating the stepwell cover, make sure there are no pets, shoes or other obstructions in the stepwell area. Do not operate the stepwell cover while standing in the stepwell area.

Stepwell Storage

The interior stepwell features a storage compartment in the upper step. This compartment is ideal for storing items such as gloves (for refueling), tire pressure gauge, flashlights or outside slippers.

Storage Compartment

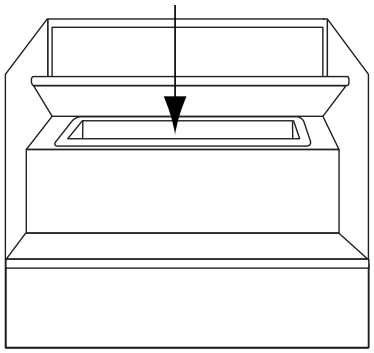

090344d

GRAB HANDLE

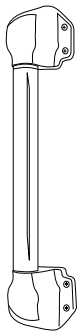

020130d

The grab handle is used to aid in entering and exiting the motorhome.

Cleaning the Handle:

- Clean the acrylic grab handle using mild Soap and Water only!

What Not To Use:

- Do not use alcohol based glass cleaners as these solutions adversely affect acrylic material causing stress cracks leading to eventual failure of the grab handle.

ENTRY DOOR

The door uses two separate locks for safety and security. One locking system is the door lock and the other is a dead bolt. The door lock incorporates a primary and secondary latching system to ensure safety.

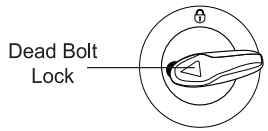

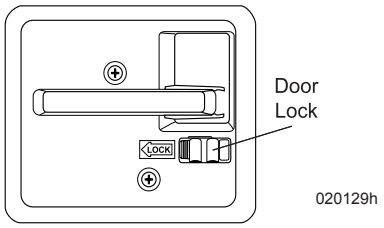

020129h

Keyless Entry

The keyless entry system is operated with the ignition key. The keyless entry system locks and unlocks the entry door only.

The keyless entry system does not lock or unlock the compartment bay doors. The ignition key is used to manually lock or unlock compartment bay doors.

To Lock:

- The chassis battery disconnect switch must be on.
- Press the Lock button on the ignition key.
- All marker lights and taillights will flash.

To Unlock:

- The chassis battery disconnect switch must be on.
- Press the Unlock button on the ignition key.
- All marker lights and taillights will flash.

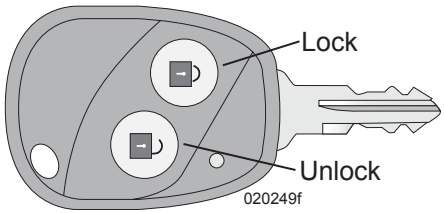

020249f

Adjusting the Entry Door Latch:

- Determine which bolt needs adjustment.
- Slowly close the entry door, observing the latch and strike bolt alignment. Do not attempt to latch if the alignment is off. If the alignment is correct, allow the latch to catch in the first (primary) position only.

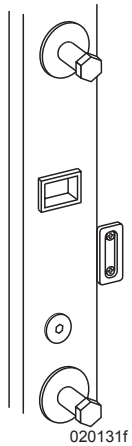

020131f

- The latch should move to the second position with only slight pressure applied to the entry door. Upper and lower latches should be evenly timed. Press on the entry door to check for further movement.
- The entry handle should operate with little effort to open the entry door. Excess pressure indicates the bolts are set too far back.
- With a box wrench or socket, loosen the movable strike bolt. Adjust in small increments. Tighten the bolt firmly after making adjustments. Bolts should have slight up and down movement for vibration control in travel.
- Test the operation of the dead bolt lock to ensure proper functions.
- Spray silicone on a 1" sponge paint brush then brush door gasket to eliminate squeaks during travel.

CAUTION:
When operating the entry door, ensure the dead bolt latch is fully unlocked prior to closing. Damage to the dead bolt and/or entry door can result.

Changing Screen Door Glass:
- The screen slider is Tuffak®. The slider can be bowed for removal and replacement.
- Replace with new Tuffak and reverse the procedure.

Adjusting the Screen Door:
- The steel hinge has slots to allow movement.
- Loosen the fasteners on the hinge side of the screen door: two on the top and two on the bottom.
- The hinge should fit tightly to the trim of the door when the screen door is latched to the door and the door is open.

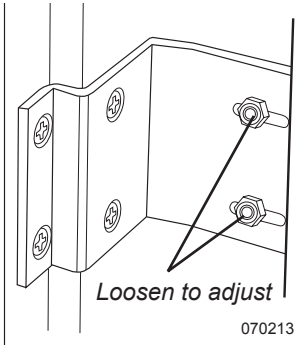

Removable Screen:
The top half of the screen door is removable, allowing a clear view through the entry door glass while in operation.

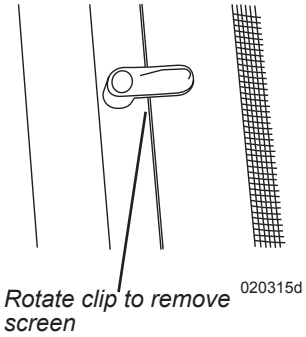

- To remove the top half of the screen door for travel, rotate clips and remove the screen.
- To store the screen for travel, use the clips provided on the bottom half of the screen door.

SLIDEOUT OPERATION

Slideout room operation uses safety features to prevent mechanical damage or physical harm. Slideout room(s) will not operate until all safety requirements are met. To prevent damage to cabinet doors or the slide room, secure all cabinet doors in the closed position prior to room activation. Interior doors may require being fully open or fully closed for sufficient clearance to operate the slideout(s).

Slideout Operation Requirements:
- Engine is running.
- Park brake is applied.
- House battery disconnect switch is on.
- House batteries are charged.
- Lock bar is removed.
- Hydraulic jacks (if applicable) are retracted with the motorhome supported by the air suspension (air springs).

Extending & Retracting Slide Rooms

CAUTION:
The motorhome must be supported by the air suspension (air springs) whether extending or retracting any slideout room. Do not operate the slideout room with the air suspension deflated or when supported by hydraulic jacks (if applicable). Damage to the slideout room, mechanism or seals can occur.

To Extend or Retract Slide Rooms:
- Retract hydraulic jacks (If applicable).
- Start the engine. Allow time for the air suspension (air springs) to support the chassis. The motorhome must be supported by the air suspension **before** operating any slideout room.
- Ensure the park brake is applied.
- Move the driver and passenger seat forward.

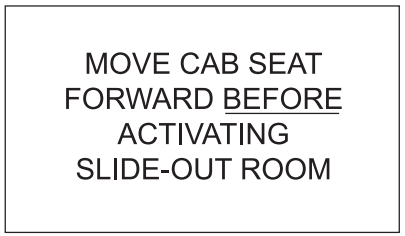

- Clean the floor of dirt or grit that could result in damage during operation.
- Confirm there is enough clearance inside/outside the motorhome for the room to extend/retract.
- Allow at least five feet of clearance to extend the slideout.
- If applicable, remove any locking bars.

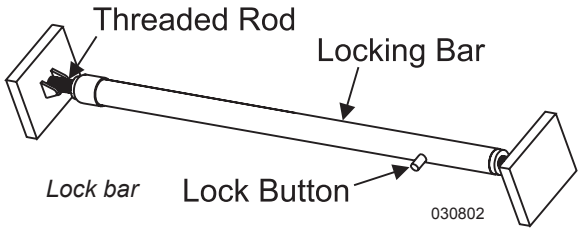

- Confirm the house batteries are fully charged.
- Open a window or vent to equalize pressure during slideout operation.
- Ensure people, pets and objects are clear of the slideout room path.
- Firmly latch all cabinet doors and close drawers. Damage to the doors, drawers and fascia can occur.
- Locate the slideout room control switch. Press and hold the slideout room switch to the desired (In or Out) position.
- Release the switch to stop room movement at any time. A change in motor sound indicates full extension/ retraction.

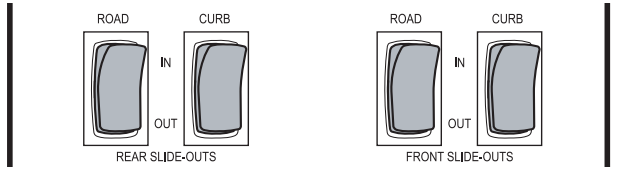

Slideout switches located on systems control panel

CAUTION:
Firmly latch all cabinet doors adjacent to the slideout before extending or retracting the rooms. Damage to doors or the fascia may occur.

CAUTION:
Do not leave the slide room extended during severe weather. Conditions such as high winds or heavy rain may cause damage. Rain water can pool on the slide room awning, adding weight and causing the awning to sag. Retract the room in small increments to allow water run off.

CAUTION:
Extensive damage could occur to the slide room and awning when extending the slideout room in snow, sleet, ice or freezing rain conditions. In such conditions, if the slide room is extended, clear the awning and ensure free movement prior to operating the slideout room.

CAUTION:
Dirt and grit trapped under the slide room can scratch and damage the floor. Clean the floor before retracting the slide room. Never move the motorhome with the slide room extended.

CAUTION:
Do not use petroleum based products on the slide seal. Petroleum based products can damage the paint and will cause premature aging of the rubber seal.

WARNING:
The outside area must be clear of obstruction that can restrict slide room operation. Ensure there are five or more feet of clear space outside the slide room prior to extending the room or damage to the slide, motorhome or property can occur. Ensure there is sufficient clearance inside the motorhome prior to retracting. Clear the area of people and pets.

CAUTION:
Continuous operation of the slide room can drain the batteries and overheat the motor.

CAUTION:
If a problem with the slideout occurs, contact a qualified technician.

Lock Bar

The lock bar is a manual locking device to help retain the slideout room in the in position.

CAUTION:
Remove locking bar prior to extending slideout.

Troubleshooting

If the slide room does not operate, the house batteries may be discharged or a safety feature may be engaged to prevent room operation.

If the slideout does not respond from switch, check the following requirements:

- Start the engine.
- Park brake is applied.
- Confirm house batteries are charged.
- House battery disconnect switch is on.
- Lock bar is removed.
- Jacks are retracted (if applicable) with the motorhome supported by the air suspension (air springs).

If the slide room does not operate after checking operation requirements:

- Check the slideout fuse(s) in the domestic fuse panel.
- Examine the electrical connections at the slideout switch.
- It may be necessary to contact a repair facility to have the problem diagnosed and repaired

WARNING:
Do not work on slideout system unless both house and chassis batteries are turned off.

Manual Override – Living Room

If after ensuring the house batteries are charged (engine running), the park brake is applied and slideout related fuses are good but the slideout still does not operate, it may become necessary to manually retract the slideout. Depending on floorplan and options, the living room slideout may be operated by electric motors located in the bay (Powergear), the hydraulic jack pump (Lippert) or a cable operated system with the motor located inside above the slideout (Norco).

- Hydraulic Slideout (Lippert):

There are a number of key components on the hydraulic pump. The pump is located in the generator compartment. Refer to the illustration for these components:

- Connection to the control valve
- Control valve
- Manual drive access located under the protective label.

If there is a problem with the slideout not retracting follow these steps.

CAUTION:
Do not run the hydraulic motor for an extended, continuous period of time. Damage to the motor can occur.

CAUTION:
Do not continue to run the hydraulic motor if the slideout does not retract. Damage to the motor could occur.

WARNING:
The hydraulic motor can be extremely hot. Use extreme safety when accessing and working on the motor. Hot metal can result in serious burn injuries.

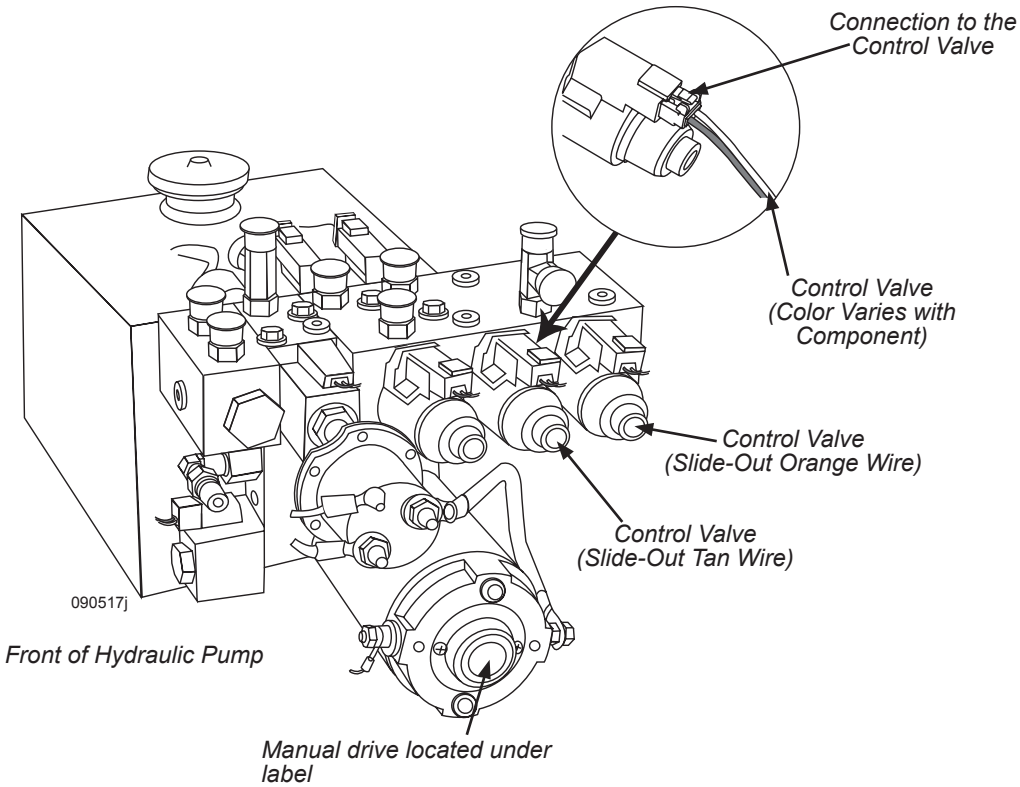

Control Valve:

Each control valve operates a specific slideout. The control valve (specific slideout) is identified by a colored wire on top of the control valve:

- **Tan Wire** – living room slideout.

If Pump Runs:

- Turn off both the house and chassis batteries using the main battery disconnect switches.
- Access the hydraulic pump.
- Ensure that the connection to the control valve is plugged in. If it is loose properly secure the connection.
- Locate slideout control valve on pump by finding the appropriate colored wire (tan or orange) on top of the control valve.
- Using an Allen wrench insert it into control valve and turn clockwise (IN).
- Turn on both the house and chassis disconnect switches.
- Go inside motorhome and press the slideout retract button on the Systems Control Panel. This will retract slideout(s).
- Turn off both the house and chassis disconnect switches.
- Using an Allen wrench turn control valve on hydraulic pump counterclockwise.
- Turn on both the house and chassis disconnect switches.
- Take the motorhome to an authorized repair center.

If Pump Does Not Run:

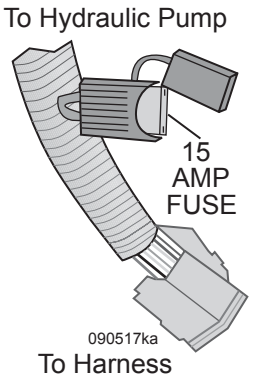

- Check the 15 Amp in-line fuse located with the leveling system wiring approximately 16” from the hydraulic pump.
- Disconnect both the house and chassis disconnect switches.
- Locate slideout control valve on pump by finding the appropriate colored wire (tan or orange) on top of the control valve.
- Using an Allen wrench insert it into control valve and turn clockwise (IN).
- Remove the protective label on the hydraulic pump. This will access the manual drive coupler.
- Attach a standard hex bit into a drill, cordless or standard.
- Insert the hex bit into the coupler found under the protective label.
- Run drill counterclockwise to retract.
- Turn off both the house and chassis disconnect switches.
- Using an Allen wrench turn control valve on hydraulic pump counterclockwise.
- Turn on both the house and chassis disconnect switches.
- Take the motorhome to an authorized repair center.

- Electric Slideout (Powergear)

- Ensure house battery voltage is above 12 Volts.
- Try to retract the slideout using the Powergear switch located above the pilot seat before trying to manually retract the slideout. This switch is used to program the In and Out motor stops of the slideout.

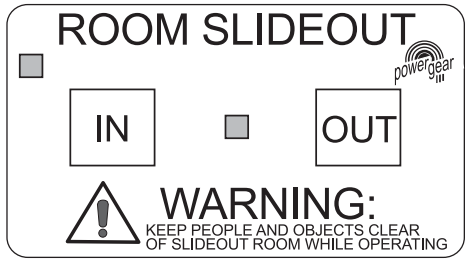

Located above pilot seat

- Check the slideout fuses located in the 12 Volt distribution panel.
- Check the relays and connections on the slideout relay board located below pantry or at the base of the washer/ drawer compartment.

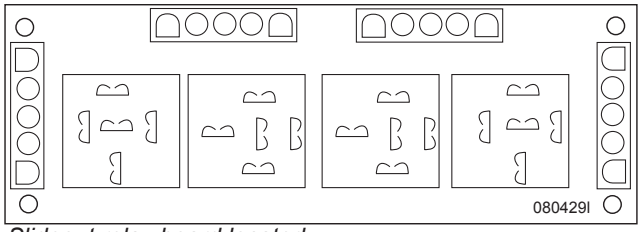

Slideout relay board located =
36’ below pantry
40’ - 43’ below washer/dryer cabinet

- Check the connections on the Powergear slideout control module.

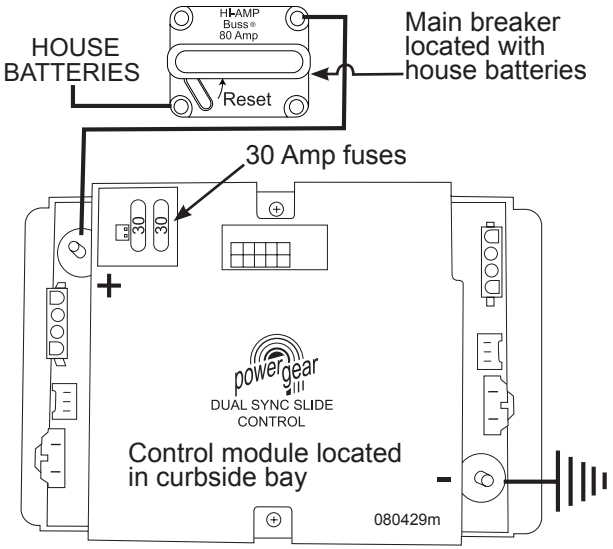

Slideout control module

- Remove the Powergear slideout switch. Press and hold Motor 1 & Motor 2 buttons and press In on the switch.
- If the slideout still fails to retract, the electric drive motors have a ¾" manual drive coupler. A brake lever under the dust boot must be released if manually retracting the drive motors. The process will involve disengaging the motor brake, manually retracting the motor ½ turn, re-engaging the brake then performing the same process for the other motor. Repeat this process until the room is fully retracted. Do not drive the motorhome with a slideout room partially or fully extended!

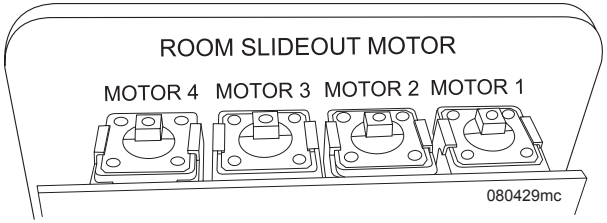

Reverse side of slideout switch

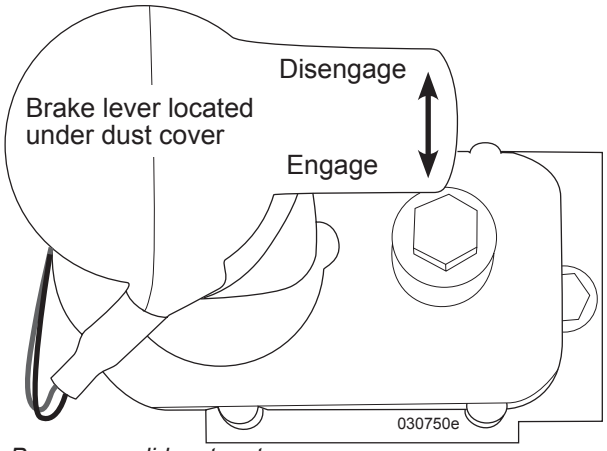

Powergear slideout motor

- Cable System (Norco):

- Turn off both the chassis and house battery disconnect switches.
- Locate the slideout motor near the interior ceiling of the slideout. Remove the fascia trim.
- Disconnect the slideout motor electrical plug to remove 12 Volt DC power from the slideout motor. The plug can be located by following wires that run from the motor to the plug.
- Attach the flexible shaft to the fitting on the end of the slideout motor.

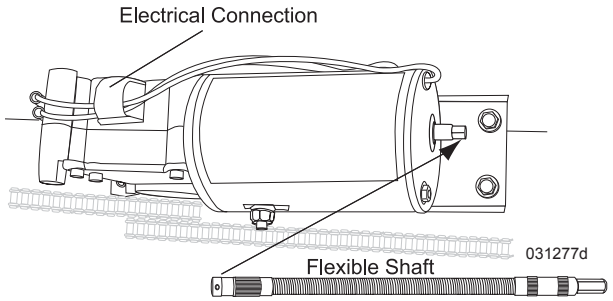

- Attach a socket and ratchet or drill to the other end of the flexible shaft. Reverse the direction. Do not over-torque as damage can occur.
- Turn in proper direction to move the room. If the cables tighten and the motor is difficult to turn, reverse the direction. Over-torquing can cause severe damage.
- Take the motorhome to an authorized repair center

Broken Cable:

If the cable on the slideout breaks, call an authorized repair center for roadside assistance. If this is not possible, the slideout must be manually pushed in. When pushing, use extreme care and safety. Take extra precautions from getting fingers pinched. Avoid getting fingers near edge of slide wall or around wall edge. Push slideout from the back. **Do not** wrap hands and fingers around edge of slideout, see illustration. Keep fingers away from frayed or broken cables. Frayed wire is sharp and can cut. Cables can also jam, then whip free causing serious injury or death.

Manual Procedure:

- Turn off both the chassis and house disconnect switches.

- The slideout room is heavy. It will require several people to push the room into position.
- Once the slideout is in position, take the motorhome to an authorized repair center.

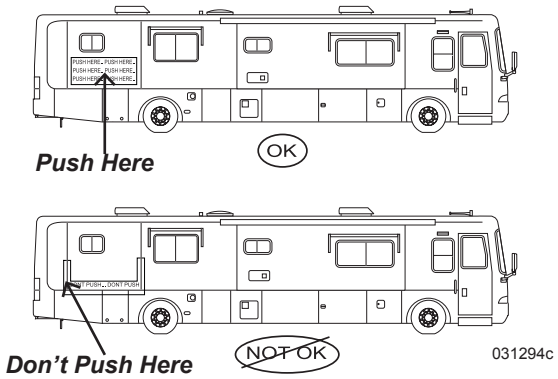

Manual Override - Bedroom

The electric motor is located under the bed deck behind a false panel. Check house battery voltage is sufficient and related fuses are good before manually retracting the bedroom slideout.

- Turn off both the chassis and house battery disconnect switches.
- The above floor slideout motor is located under the bed. Lift the bed and remove the access panel.
- Disconnect the slideout motor electrical plug to remove 12 Volt DC power from the slideout motor. The plug can be located by following wires that run from the motor to the plug.
- Use a wrench to turn drive shaft and retract room. Once the slide room is manually retracted, apply pressure to the wrench to firmly set the room and prevent room drift.
- Once the slide room is manually retracted, reconnect power supply.
- Take the motorhome to an authorized repair center.

CAUTION:
Do not continue to turn the motor after the room is fully extended or retracted. Further damage to the slide mechanism can occur.

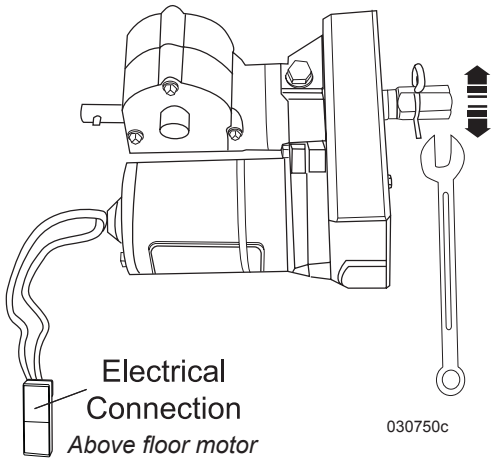

Guidelines to ensure long life of slide system:

- **Inspect** roof of the slide for debris such as pine needles, dirt, leaves, sticks, etc. Debris left on the top may cause damage to the seals during retraction. If debris is present, wash with soap and water, then rinse.
- When the room is out, visually **inspect** the wipe seal for dirt or other foreign material and for tears.
- If the slide room leaks, fully retract the room. If necessary, tape exterior opening closed with duct tape until repairs to the motorhome can be completed.

AWNINGS

Slide-out Cover

The slideout cover automatically reacts to slideout direction. A fixed edge of the slideout cover is installed into an awning rail, mounted just above the slideout. A spring-loaded roller with special brackets mounts to the slideout. In a hard rain the cover helps prevent water from penetrating the seal of the slideout. The slideout cover automatically reaches full extension when the slideout room is fully extended.

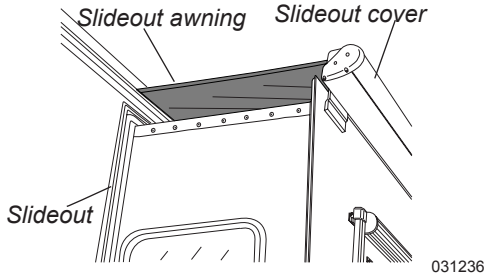

The slideout cover automatically rolls up into the travel position when the slideout room is fully retracted.

INSPECTION:
When retracting the slideout, stop the room approximately halfway. Confirm that the fabric is properly rolling before fully retracting the slideout.

CAUTION:
The slide room and slideout awning should be retracted before heavy wind, rain or snow to prevent damage to the awning or motorhome. Wind can drive rain under the slideout awning and into the motorhome.

CAUTION:
At least five feet of clearance are needed between the side of the motorhome and any objects, such as trees or fences, to allow the slide room and slideout awning to fully extend.

Rain Water

Caution rain water can pool on the slideout awning. The added weight will cause the awning to sag. Upon retracting the room, material can become caught in between the top of slide room and the opening in the motorhome. It will be necessary to retract the room in small increments and allow the water time to run off.

Front Door Awning

The awning operates on 12 Volt DC. The switch is located on the passenger console.

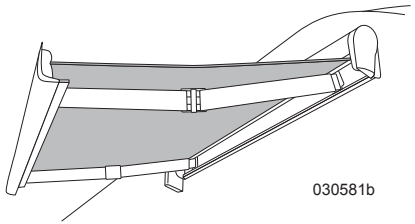

To Operate:



Located by Entry Door

- Check for sufficient clearance before extending the awning.
- Both battery disconnect switches must be on.
- Turn the ignition switch off.
- Turn on house battery power.
- Push the Door Awning Extend/Retract button and hold. When desired extension is reached, release the button.
- To close, push the Door Awning Extend/Retract button and hold to retract the awning to its travel position.

If the awning fails to operate:
- Check power at 15 Amp fuse located in the domestic fuse panel.

INFORMATION:
See awning OEM manual for detailed operation instructions.

Window Awning

To Extend:
- Hook loop of pull strap with catch rod and pull awning, reel assembly and side arms to extend fully away from motorhome.
- Hook pull strap on side strap hook, remove catch rod from pull strap and store.

To Retract:
- Hook catch rod on pull strap, remove pull strap from side strap hook and slowly allow awning to retract.
- Remove catch rod from pull strap and store for future use.

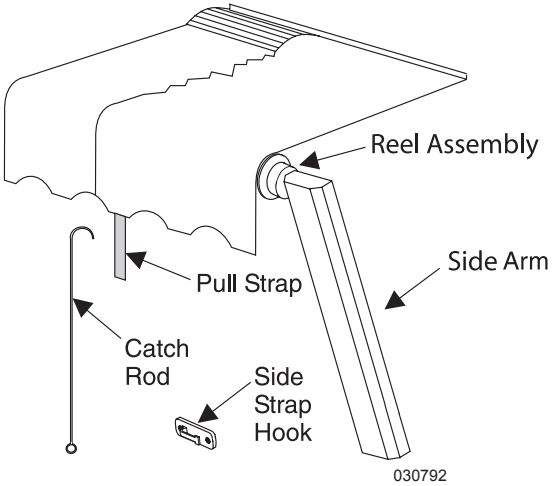

Patio Awning

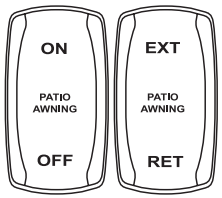

060313g

The awning operates on 12 Volt DC by the push of a button. The awning requires 10 feet of lateral side clearance.

To Operate:

- Turn the ignition switch off.
- Check for sufficient clearance before extending the awning.
- Chassis battery disconnect switch must be on.
- Turn the Awning Power On/Off button to on.
- Push and hold the Extend/Retract button to extend the awning. Release the button at any time for partial extension.
- Push and hold the Extend/Retract button to retract awning.

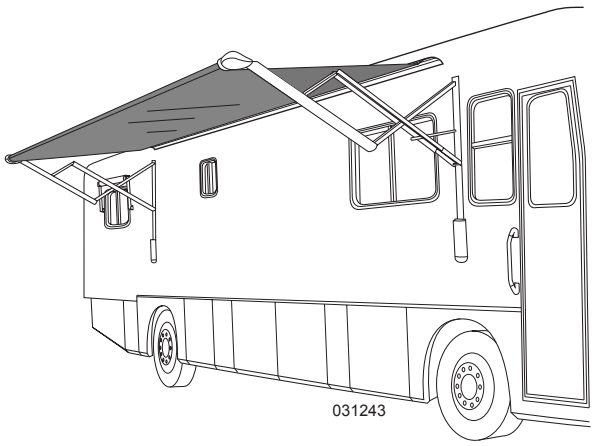
031243

Eclipse patio awning



100227

If the awning fails to operate:

- Check power at 15 Amp fuse located in the domestic fuse panel.

INFORMATION:
See awning OEM manual for detailed operation instructions.

Awning Care & Cleaning

On a monthly basis, loosen hardened dirt and remove dust from the awning with a dry, medium bristle brush. Thoroughly rinse both the top and bottom with a garden hose. A high-quality fabric cleaner may be used to help maintain appearance. Carefully follow the instructions on cleaning products. Metal surfaces should be cleaned with soapy water and thoroughly rinsed. Allow the awning to thoroughly air dry while extended. Awning maintenance products can be found at RV supply stores.

Carefree Awnings:

Acrylic Awnings - Wash both sides of the awning with a mild soap (i.e. dish soap) and lukewarm water. **Do not** use detergents. If necessary, reapply the solution to keep fabric saturated. Rinse the awning thoroughly. Repeat, if necessary, until most of the stains disappear. Contact *Carefree of Colorado* for removal of stubborn stains.

Polyweave and Vinyl Awnings - Mildew will not form on the awning material itself, but may form on the dust accumulated on the canopy. A quality vinyl cleaner, such as *Carefree Awning Magic*, will help keep the awning looking new. A mild soap (i.e. dish soap) and lukewarm water solution can be used. **Do not** use detergents. Be sure to follow the instructions on the container.

Leaks:

It is normal for slight leakage to occur through the fabric where water is allowed to accumulate. If water drips through the needle holes in the stitching, use a commercial seam sealer that is available in canvas and trailer supply stores. Paraffin wax may also be applied to the top of the seams. As the awning "weathers" these holes will normally seal themselves.

Soap or chemical residue can "wet" the fabric so that it appears unable to repel water. Rinse the fabric thoroughly and test to see if it is water repellent after it dries. If leakage continues after washing and thoroughly rinsing, please contact *Carefree of Colorado*.

Storm Precautions

The warranty does not cover damage caused by acts of nature; therefore, steps should be taken to prevent damage from occurring due to wind, rain or storms. Retract the awning in inclement weather conditions or when leaving the motorhome unattended. Should the awning need to be retracted while the fabric is wet, extend as soon as possible to allow complete drying.

INFORMATION:
Water weighs 8.33 pounds per gallon. The awning was not designed to withstand the 500 to 700 lbs. of water that can accumulate on the canvas.

FANS
Automatic

A wall rheostat controls the automatic vent and power of the fan. The system operates from 12 Volt DC power.

Fan Operation:
- House batteries must be on.
- Turn on the battery cut-off switch.
- Push the vent cover knob to the Automatic position.

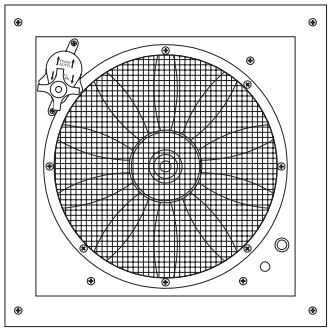

030832k

NOTE:
Push the knob in for automatic. Pull the knob out for manual.

- Use the wall switch to raise the vent cover. The vent cover will open approximately 2" before the fan will run.
- Turn power knob clockwise to turn fan on. The power knob also adjusts fan speed.

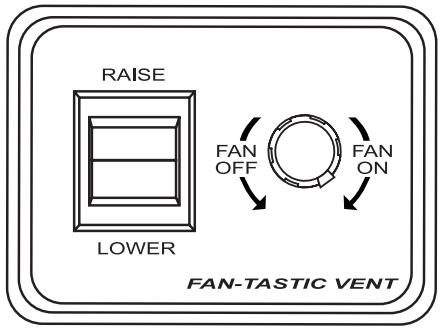

031205d

NOTE:
To override the automatic setting, pull the vent cover knob out to the manual position and close vent. The fan blade will stop spinning when the vent is closed.

WARNING:
Do not hold switch after the motor has stopped. This can damage to the automatic lift system.

NOTE:
The safety switch will not allow the fan motor to operate until the vent is open approximately 2" or more.

Tips:
- Operate the fans to keep condensation from accumulating. Condensation occurs naturally from fluctuations in interior and exterior temperatures, humidity and dew point changes, steam from cooking or boiling large amounts of water on the cooktop. Shower use is another source of condensation.
- If the fan fails to operate, check for a blown fuse either in the house distribution fuse panel or the 4 Amp fuse on the fan.
- To remove the screen, loosen the screws holding the screen in place. Use non-abrasive soap and water to clean and reinstall.
- Slightly open windows on the shaded side of the motorhome to create the most airflow, especially on hot, sunny days. Direct airflow by slightly opening selected windows. Maximum airflow is achieved between an open window and the vent.

NOTE:
Do not leave the fan switch in the active mode while the motorhome is stored or unattended for extended periods. High winds, unusual conditions or obstructions may prevent the fan cover from fully closing, resulting in leakage and serious damage.

BEDROOM CEILING FAN (OPTIONAL)

A bi-directional 12 Volt DC powered ceiling fan is located in the bedroom. Place the switch in the up position to move the blades counterclockwise and push air down (for cooling in summer). Place the switch in the down position to move the blades clockwise and pull air up (for warming in winter). Turn the fan off before reversing fan blade direction.

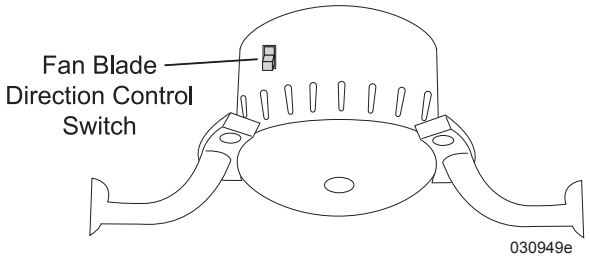

CAUTION:
Use caution not to enter into fan path when on. Serious injury can occur.

Fan operation is controlled by a switch next to the bed and has three positions: Off, High Speed and Low Speed. Periodic maintenance consists of cleaning the blades with a soft cloth towel or a vacuum to remove dust build-up.

Requirement for Ceiling Fan Operation:

- House battery disconnect switch must be on.
- Turn on battery cut-off switch.

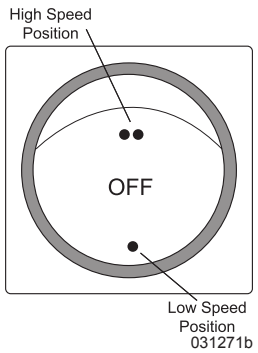

SOLAR SCREEN & BLACKOUT SHADE
Cockpit

The front windshield is equipped a powered solar screen and blackout shade. The solar screens and blackout shades throughout the rest of the motorhome are operarted manually. The windshield screen and shade are operated by switches on the driver's console.

Windshield Solar Screen and Blackout Shade Operation:

The "Front Visor" switch on the driver's console operates the solar screen. Press and hold switch in the up or down position. Release switch to stop solar screen movement.

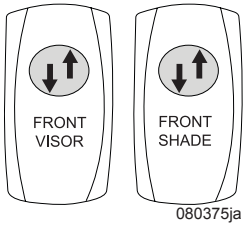

The "Front Shade" switch on the driver's console operates the blackout shade. Press and hold switch in the up or down position. Release switch to stop shade movement.

WARNING:
Do not attempt to move or drive the motorhome with any window view obstructed.

DOOR - SLIDING

The sliding pocket door utilizes two rollers at the top of each door. The sliding door may eventually require adjustment. Turn adjusting screw upward or downward as necessary to align door.

To remove the pocket door, rotate lever outward to release the latches.

LUBE:
The pocket door rollers should be lubed with just a small drop of oil once a year to help increase the life of the rollers and improve sliding.

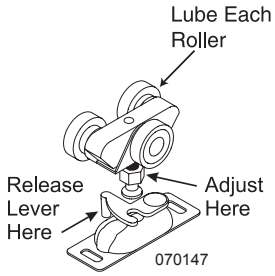

SEAT CONTROLS

The Pilot and Co-Pilot seats are adjustable to provide maximum comfort. Seats must be locked in the forward facing position while traveling.

To Operate Seat Power Controls:

- Battery disconnect switch must be on.
- Battery cut-off switch must be on.

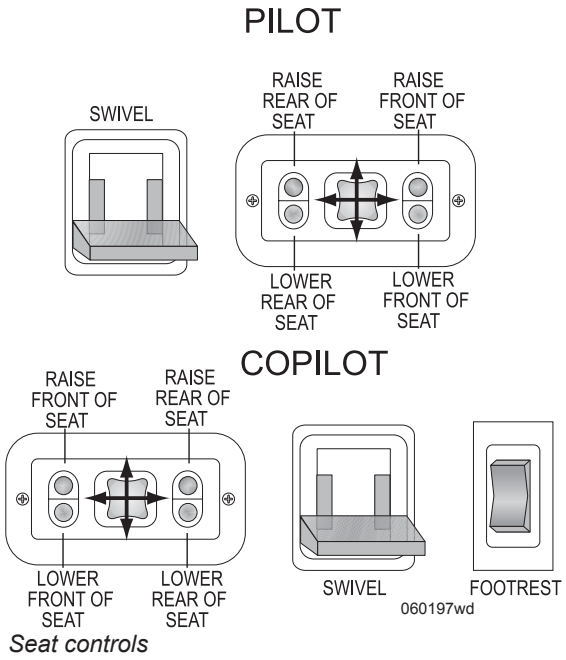

Seat controls

Swivel Seats

Swivel Seat Operation:

- To swivel, pull out on the swivel control lever.
- When rotating the driver seat, put the steering wheel in the upright position.
- Move the seat forward. Pull the swivel lever up and rotate to the desired position.

NOTE:
If either power seat is rotated 180°, it must be rotated back in the opposite direction. The 12 Volt wiring in the seat may disconnect if seat is rotated 360°.

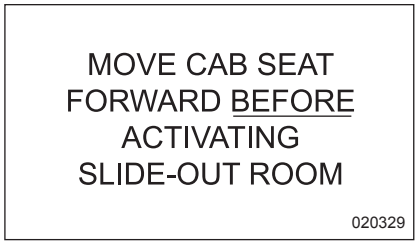

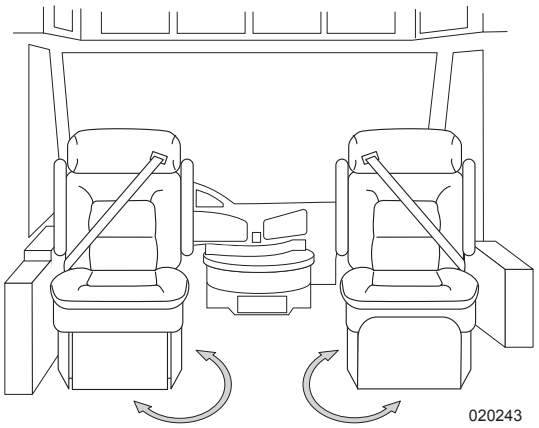

WARNING:
Seats must be locked in the forward facing position while the motorhome is in transit.

SOFA
Jack Knife Sofa

The sofa coverts into a bed. Clear the area of obstruction and debris.

Sofa to Sleeper:

- If applicable, release lock.
- Raise the sofa seat base until seat base and backrest form a "V" shape by lifting up from the center of sofa just below the seat cushions.
- Push down on seat base until the seat base and backrest are flat.

Sleeper to Sofa:

- Lift the seat base up until seat and back rest are in a "V" shape.
- Push down on seat base.

WARNING:
Do not use the sofa for transporting infants or children that require safety seats or booster seats.

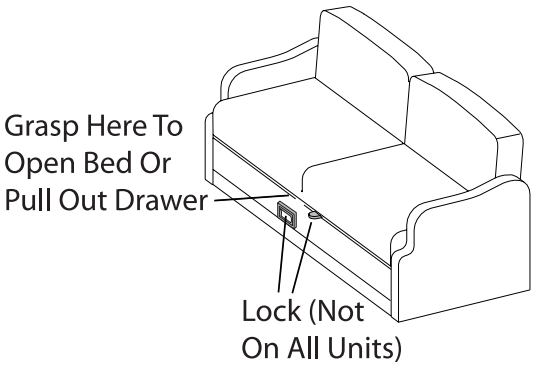

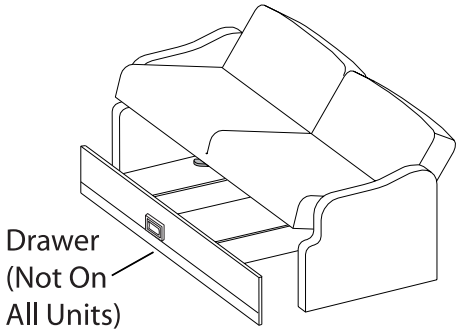

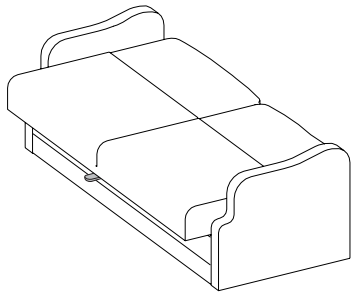

Hide-A-Bed (Optional)

The sofa hide-a-bed will convert into a bed. Clear the area of obstruction and debris.

Sofa to Sleeper:

- Remove the three seat cushions to access the hide-a-bed. The seat cushions should be stored safely until the bed is converted back to a sofa.
- If applicable, release the lock on the right side of metal bar, grasp the front metal bar and lift up pulling out on the bar slightly until the leg of the bed is firmly resting on the floor.
- When the legs of the bed are firmly on the floor there will be another lifting bar exposed to complete the conversion process.
- Grasping and opening the lifting bar will open the bed fully. The bed is now ready for linen.

Sleeper to Sofa:

- Remove all bedding from the hide-a-bed.
- Grasp the foot of the hide-a-bed in the center using the metal lifting bar.
- Fold over the bottom portion of the bed that will form the seat.
- Lift the front portion of the lifting bar to raise and lower the hide-a-bed back into the sofa base.
- Replace the seat cushions.

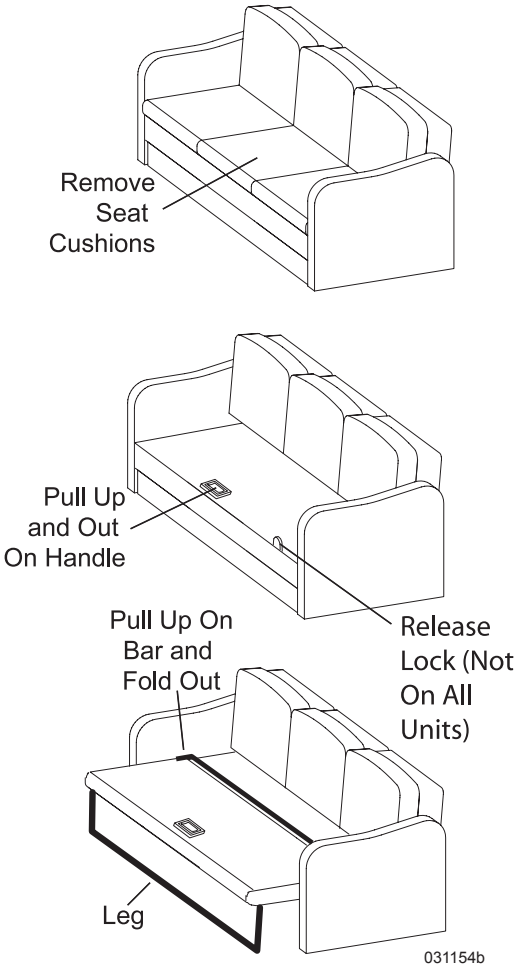

Hide-A-Bed Air Mattress (Optional)

Use the hand-held electric pump to inflate the mattress. Plug the pump into a 120 Volt AC outlet. For ease of operation, position the sofa so that accessing an electrical outlet is convenient.

To Inflate Mattress:

- Open sofa and allow the mattress to lie flat.
- Unzip the corner of the mattress labeled Air Pump Access.
- Remove valve cap by turning cap counterclockwise.
- After cap is removed, insert pump motor and turn clockwise until pump is engaged.
- Plug in pump motor and inflate to full, approximately 60 seconds. A motor pitch change occurs when mattress is full.
- Remove pump and reseal valve cap by turning clockwise.
- Zip the “Air Pump Access” cover closed. The bed is now ready for linen.

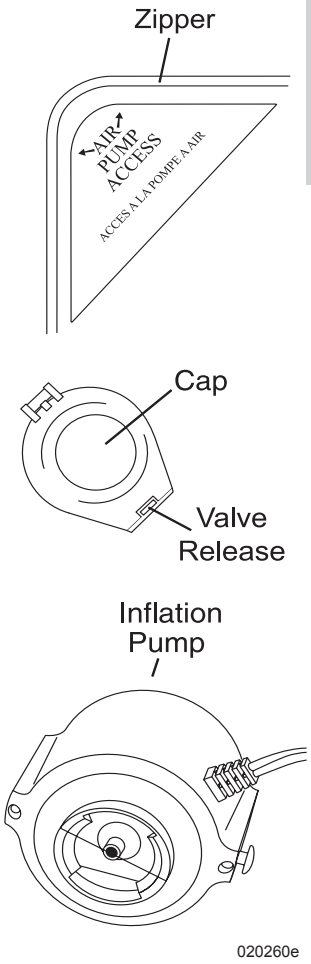

To Deflate Mattress:

- Remove bed linen.
- Unzip the corner cover of the mattress labeled “Air Pump Access.”

- Open deflation valve by lifting valve latch. Allow mattress to deflate.
- Once the mattress is deflated, swing valve to closed position. **Do not** lock valve closed by locking the valve. Trapped air could damage the mattress.
- Zip the "Air Pump Access" cover closed and close the sofa.

NOTE:
Do not close deflation valve when closing the sleeper mechanism.

WARNING:
The electric inflation pump is for indoor use only. Do not use near or place in water. Keep infants and small children away from pump and product when not fully inflated. Partially inflated product can cause suffocation.

Select Comfort Air Mattress (Optional)

The Air Mattress includes two separate air chambers that can be adjusted for comfort and firmness. The air pump is located under the bed.

To Operate Air Mattress:
The air mattress requires 120 Volt AC. Hook to shore, start the generator or turn on the inverter.

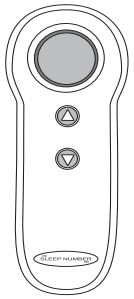

031117c
Air Mattress Remote

What is a Sleep Number:
- It is a setting between 0 and 100 that represents the ideal combination of mattress comfort, firmness and support for each person's body.
- Use the initial Sleep Number on the remote as a starting point.

Setting the Sleep Number:
- Lie on the bed in a normal sleep position.
- Press and release any remote button to display the current Sleep Number setting.
- To change setting, press the firmer or softer buttons until desired comfort setting is achieved.
- Remain still until the number change is complete.
- When adjustment is complete, the Sleep Number will stay lit for five seconds and then the display will turn off.

NOTE:
Finding the ideal sleep number may require experimenting with different settings.

CAUTION:
When retracting or extending the slideout ensure that the air mattress remote is safely stored and away from the moving slideout. If not safely stored the air mattress remote could be damaged by the retracting or extending slideout.

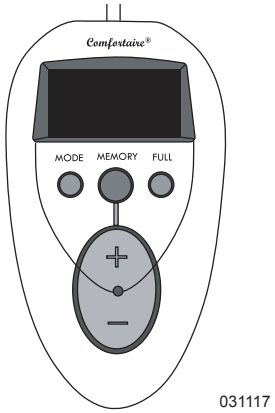

031117
Air Mattress Pump

Mattress Care:
The cover may be spot cleaned with carbonated water or mild detergent. **Do not** dry clean the mattress cover or put it in a washing machine. Do not apply a stain-guard, as this may cause yellowing of the fabric.

In rare instances mold or mildew may form inside mattress or bedding. If this occurs call the manufacturer's customer service department at 800-318-2231.

Mountain Traveling:
If traveling into a mountainous region, either (1) temporarily disconnect the mattress from the pump hose to allow air escape or (2) partially deflate the mattress chamber to a Sleep Number of 20.

WARNING:
Rapid changes in altitude will effect the air pressure inside the mattress. The chamber may be damaged when pressure becomes too great.

INFORMATION:
For more detailed information consult the OEM manual or call 800-318-2231.

STORAGE - UNDER BED

To use the storage compartment located under the bed, lift up the bed by the front edge of the mattress platform. Gas struts hold the mattress and platform open.

NOTE
Overstressing gas struts by rapidly opening or closing the bed access cover can damage the struts or mounts. In extreme cold, struts may not hold the mattress platform open.

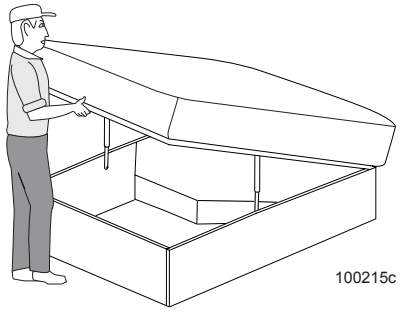

LADDER - REAR (OPTIONAL)

The rear ladder allows access to the roof. Use care when climbing the ladder. Access to the roof should be limited to cleaning and sealing purposes only.

Stow the lower portion of the ladder in the cargo bay during travel.

NOTE:
Maximum weight capacity for the ladder is 300 lbs.

STORAGE BAY SLIDE-OUT TRAY (OPTIONAL)

The storage bay slide-out tray allows items to be stored and retrieved with easy access.

WARNING:
The motorhome must be level when sliding the tray out of the bay compartment. The tray can slide out abruptly and cause bodily harm if the motorhome is not level.

- Ensure the motorhome is level.
- To open, press down on the latch and hold to unlock. The tray can then be pulled out.
- To close, slide the tray in until the latch locks the tray in place.
- Do not exceed maximum weight capacity (800 lbs.).

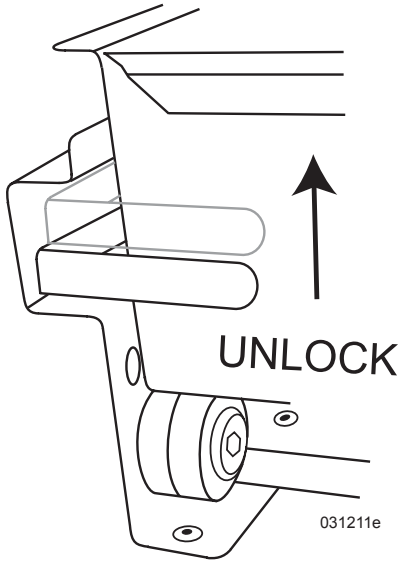

Lift handle to Unlock

DASH RADIO

The dash radio includes an AM/FM tuner, CD/DVD player, Weather Band, Rear Camera an iPod connection and is Sirius ready. A remote control is included (not shown). The system is also used to play home theater audio with the TV. The system uses a touch-screen display. Each selected feature will bring up a new menu for the selected feature. Press the Home button to return to the main menu.

Operation Requirements:
- Turn on the battery disconnect switch.
- Turn on the radio.

INFORMATION:
Only the most common connections and features are described. The system is comprehensive. It is recommended to refer to the dash radio OEM manual for detailed operating instructions and information. While the system has many features, function buttons with black text mean the source or function (such as Navigation) is not available.

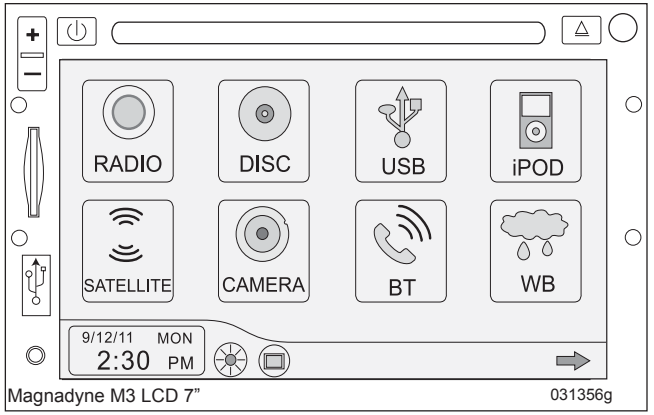

Dash radio

Steering Wheel Controls

Located on each side of the steering wheel are paddle switch radio controls. The paddle switches control basic radio functions. The ignition key must be in the On position for the paddle switches to function.

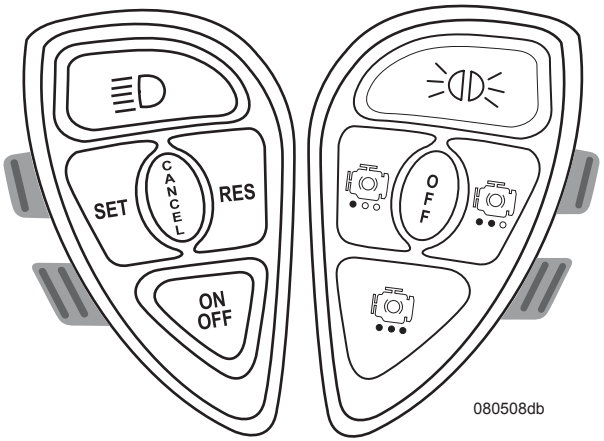

Steering wheel paddle controls

Upper Left Up/Down	Lower Left Up/Down	Upper Right Up/Down	Lower Right Up/Down
Power On/Off	Radio Weather Band Front Aux Rear Aux	Volume Up	Search Up
Mute	AM or FM	Volume Down	Search Down

To Set the Clock:

- Press the Settings button.
- Press the Time button.
- Use the arrows to set hour and minute. The clock can be set for 12 or 24 hour display by pressing the Time Format button.

To Play the Radio:

- Press the Radio button. The radio menu will display.
- Press the Band button to select AM or FM.
- Right or Left buttons increase or decrease frequency.
- Press and hold one of the preset buttons to store the station in memory.
- Adjust Volume to desired level.

To Play a CD or DVD:

- Insert a CD or DVD.
- The menu will change and the disc will load and play automatically.
- Adjust Volume to desired level.

NOTE:
DVD video is unavailable while the vehicle is in motion. Turn the ignition off and set the park brake to display video.

To Play Weather Band:

- Press the Weather button and the tuner will scan for strongest weather band station.
- Adjust Volume knob to desired level.

USB Port:

- Insert a USB device or connect an iPod (cable not provided) to the USB port.
- The radio will automatically switch modes.

NOTE:
Not all MP3 players may be compatible. If not, use the stereo jack (“Aux In”) input. The radio will automatically switch modes to play back from this input when a USB device is connected. Depending on the source material, the radio may display track title and file type information.

SD Card Operation:

- Insert the Secure Digital (SD) flash memory card into the slot on the front panel.
- The unit will automatically switch to the SD Card mode and start playing.
- Depending on the source material, the radio may display track title and file type information.

Aux In/iPod (Stereo Jack):

- Connect a cable with a 1/8” stereo plug (male) on both ends from an auxiliary device (such as an MP3 player headphone jack or a laptop computer speaker/headphone output) to the “Aux In” input. This will give audio reproduction through the dash stereo.
- Set the auxiliary device to a mid-range volume level and adjust volume at the dash stereo for best results. Source information may not display on the radio screen (such as song title, artist, etc.).

Radio Switch



080498v

Provides power to operate the dash radio when the ignition switch and house battery cutoff switch is turned off. Radio memory is not affected when the switch is turned off.

Satellite Radio (Optional)

The dash radio can be upgraded with optional Sirius® radio hardware that will decode and play Sirius satellite radio. Subscription not included. Satellite signals are transmitted from a ground station to satellites orbiting over the continental United States.

To Play Satellite Radio:

- Repeatedly press the Mode button until "Sirius" displays. Use the Tune/Track knob to select different satellite radio channels.

INFORMATION:
Subscription not provided. For information regarding subscriptions and service coverage areas, contact the system provider.

Sirius® Radio
1-888-539-7474
www.siriusradio.com

INFORMATION:
Refer to the Sirius OEM manual for operating instructions.

GPS NAVIGATION (OPTIONAL)

The Garmin Nuvi is viewed through a portable monitor. The GPS system is Bluetooth capable and an SD card slot is located on the side of the monitor. The system provides detailed street maps, points of interest such as restaurants, hotels, and gas stations, trip computer, and turn-by-turn directions via voice guidance. The GPS is pre-loaded with a majority of street maps for North America. Maps can be viewed from different perspectives: 3-D, top-down, track-up, or north-up view. A SD card slot is available for loading custom points of interest, additional maps, and software updates.

CAUTION:
For safety, only perform GPS operations when the motorhome is parked.

INFORMATION:
Complete operating instructions and information are found in the Garmin OEM manual.

CAUTION:
The system can be locked to prevent unwanted use. If the PIN is lost, the system will need to be sent to Garmin with product registration so it can be unlocked.

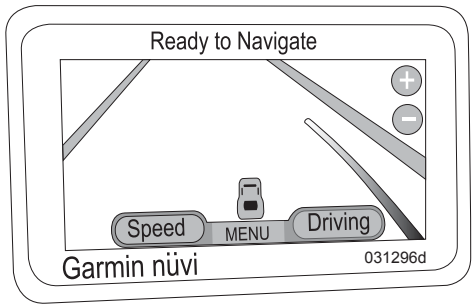

TV ENTERTAINMENT COMPONENTS

The following paragraphs will discuss the operations and various components that make up the entertainment center.

INFORMATION:
It is recommended to become familiar with individual components. Refer to the respective component's OEM manual for detailed instructions.

NOTE:
All components of the entertainment system require 120 Volts AC to operate. Hook to shore power, start the generator or turn on the inverter. The satellite system (if equipped) requires 12 Volts DC to operate. Turn on the interior house power using the battery cut-out switch.

Television (Front) Lockout Feature

The park brake controls the outlet for the front TV, allowing the front TV to operate only when the park brake is applied. Viewing time of the front TV from the inverter depends on state of charge of the house batteries and any additional 12 Volt DC lighting used.

TV Antenna

The television (TV) antenna with built-in electronics use 12 Volts DC to "boost" signal strength. Directional control, amplifier and attenuator are located on the antenna base. The Antenna Select switch, located in the bedroom (under the bedroom TV), switches between either roof antenna or shore cable if available.

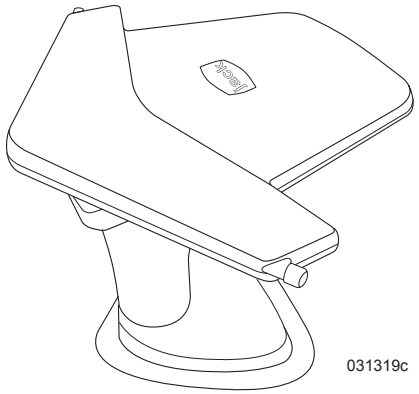

Directional control and the attenuator provide the best possible picture for most situations depending on location. Certain reception conditions may occur where amplification can degrade picture quality.

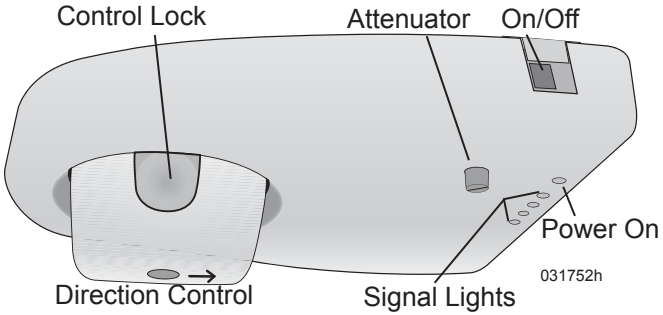

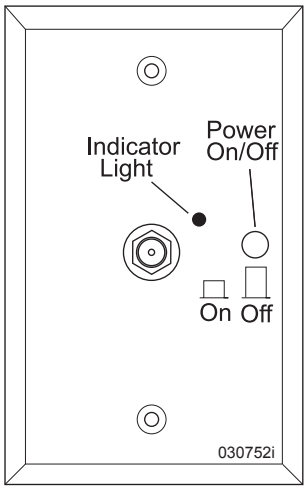

Antenna select switch located in front entertainment overhead

To Use the Roof Antenna:

- Turn on Antenna Select switch.
- Turn on Signal indicator.
- Rotate Attenuator fully clockwise.
- Press inwards on lock to directional control then rotate antenna until maximum number of signal strength lights illuminate.
- Rotate Attenuator counterclockwise until maximum number of signal strength lights illuminate.
- Rotate antenna until strongest signal indicator flickers then adjust attenuator counterclockwise until maximum number of signal strength lights illuminate.
- Antenna direction and attenuator is now set for the best possible picture.

NOTE:
The Antenna Select switch must be on to power the attenuator and signal strength lights.

NOTE:
Rotation control stops allow the antenna to rotate 360º.

NOTE:
Rotate direction control knob with arrow pointing rearward for travel.

To Use Shore Cable:

- Turn the Antenna Select switch off.
- Make the cable connection to the shore cable port located on the water service center panel.

Cable TV, Satellite & Phone Connection

The motorhome is equipped with cable TV, satellite, and phone hook-up located in the roadside water service center.

- The Cable connection in the water service center is for a Cable input, for example, a campground cable TV hookup.
- The Sat connection is for use with a stand-alone satellite dish. See “Satellite Systems” for more information on equipment hookup and cable routing.

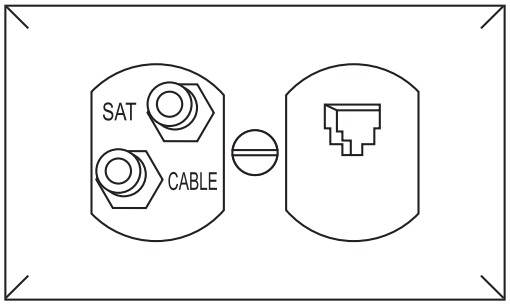

Located in the water service center compartment

Front TV Operation

NOTE:
Due to options in entertainment equipment and floor plans, operation of entertainment components may vary.

NOTE:
Refer to the OEM manuals for further information and programming instructions.

- Hook to shore power, start the generator or turn on the inverter.
- Ensure the house batteries are fully charged.
- Turn on interior house power.
- Ignition key must be off for the front TV to work.

To Watch TV from the Antenna:

- Turn on Antenna Select switch.
- Turn on the TV. Repeatedly press the TV Input button to select TV.
- Select desired channel.
- Adjust antenna direction and attenuator.
- Adjust volume on TV.

To Watch TV from Shore Cable:

- Hook to shore cable using the Cable port in the water service compartment.
- Turn off antenna select switch.
- Turn on the TV. Repeatedly press the TV Input button to select TV tuner.
- Select desired channel on TV.
- Adjust volume on TV.

DVD Player (Standard):

- Press the Power button to turn DVD player on.
- Press the Open/Close button to open DVD tray.
- Place DVD onto tray. Close tray. DVD will load and play automatically.
- Repeatedly press the Input button on the TV until the DVD appears on the TV.
- Adjust volume on TV.

Home Theater Sound:

- Turn on the DVD player and insert DVD.
- Turn on the TV. Turn down TV volume.
- Adjust volume on the DVD player.

iPod Dock:

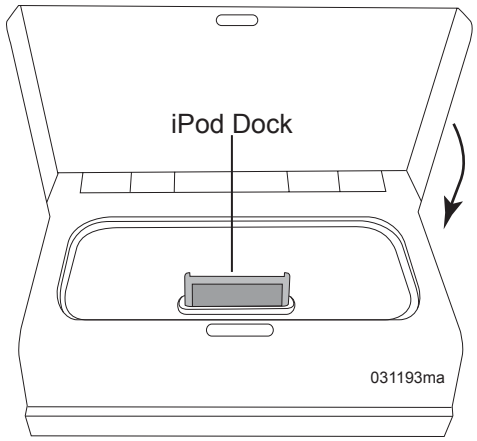

- Turn on DVD player.
- Open iPod dock door.
- If necessary, install iPod adapter.
- Turn on TV. Press TV Input button until DVD screen displays.
- Repeatedly press DVD input select button to select iPod.
- Use the iPod controls to navigate, select and play media.

NOTE:
An adapter (not provided) may be required to dock (connect) the iPod depending on iPod model and series. Most iPod models are compatible with the DVD player. Refer to the OEM manual to determine compatibility.

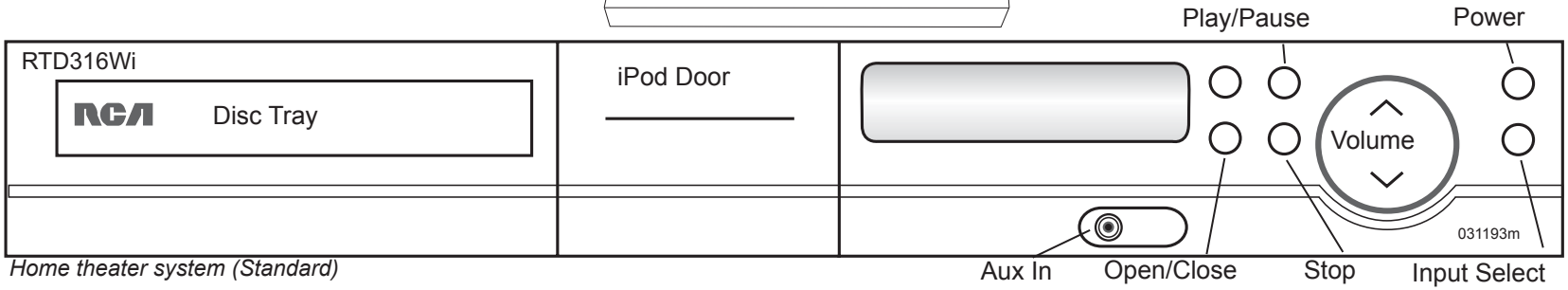

Home theater system (Standard)

Blu-Ray Player (Optional)

To Watch a DVD:

- Press the Open/Close button on the DVD player. Allow time for the system to power on and open door.
- Insert a DVD with label facing up. Press Open/Close. Allow time for player to scan disc.
- Turn on the TV. Press the TV Input button until the DVD menu displays.
- Adjust volume on the TV or adjust volume on the home theater system.

NOTE:
A firmware update to the player may be required before a Blu-Ray disc will play. Refer to OEM manual for more infomation.

To Play a Music CD:

- Press the Open/Close button on the DVD player.
- Place a CD on the tray, label side up.
- Press Play if necessary.
- Adjust volume on TV or adjust volume on the home theater.

Listen to CDs:

- Turn on the DVD player.
- Insert a CD into the DVD player.
- Adjust volume to desired level.

Exterior Entertainment Center (Optional)

The exterior entertainment has a LCD television and DVD player located in the interior entertainment cabinet above the co-pilot.

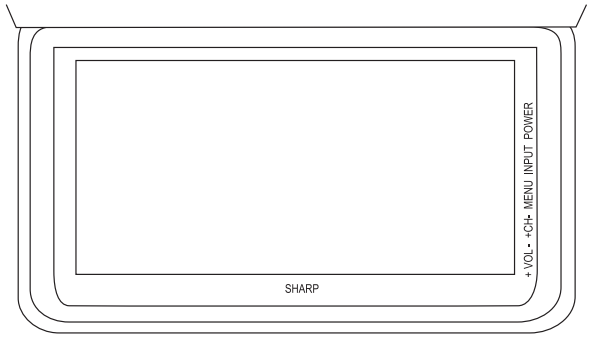

Typical exterior entertainment center 031290

To Operate Any Component:

Entertainment components require 120 Volt AC from shore power, generator, or the inverter.

- Turn on the house battery disconnect switch.
- Ensure house batteries are charged.
- Battery cutoff switch must be on.

To Watch TV from the Antenna:

- Turn on Antenna Select switch.
- Turn on the TV. Repeatedly press the TV Input button to select TV.
- Select desired channel.
- Adjust antenna direction and attenuator.
- Adjust volume on TV.

To Watch TV from a Shore Cable:

- Hook to shore cable using the Cable port in the water service compartment.
- Turn off the antenna select button.
- Turn on the TV. Press TV Input button to select TV.
- Select desired channel on TV.
- Use volume control on TV to select desired sound level.

DVD Player:

- Press the Power button to turn DVD player on.
- Press the Open/Close button to open DVD tray.
- Place DVD onto tray. Close tray. DVD will load and play automatically.
- Repeatedly press the Input button on the TV until the DVD appears on the TV.

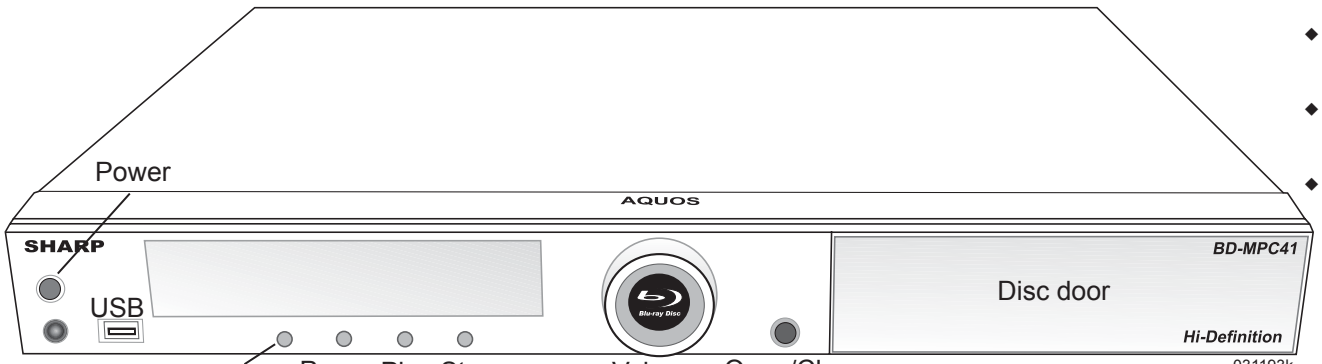

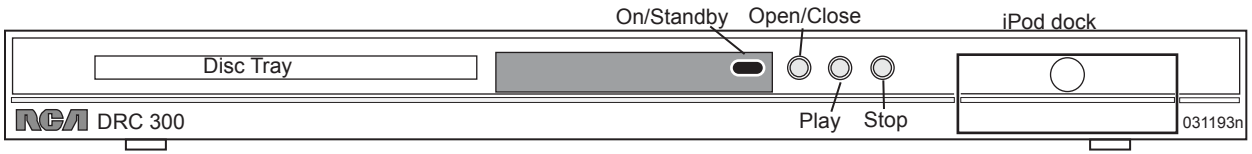

DVD player for exterior entertainment center

Home Theater Sound:

- Turn on the DVD player and insert DVD.
- Turn on the TV. Turn down TV volume.
- Adjust volume on the DVD player.

Listen to CDs:

- Turn on the DVD player.
- Insert a CD into the DVD player.
- Adjust volume to desired level.

iPod Dock:

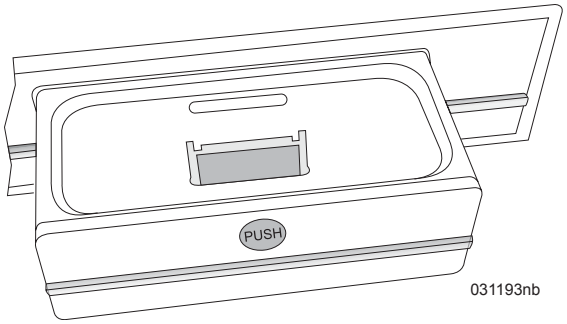

- Turn on DVD player.
- Open iPod dock door.
- If necessary, install iPod adapter.
- Turn on TV. Press TV Input button until DVD screen displays.
- Repeatedly press DVD input select button to select iPod.
- Use the iPod controls to navigate, select and play media.

NOTE:
An adapter (not provided) may be required to dock (connect) the iPod depending on iPod model and series. Most iPod models are compatible with the DVD player. Refer to the OEM manual to determine compatibility.

Bedroom TV Operation

To Watch TV from the Antenna:

- Turn on Antenna Select switch.
- Turn on the TV. Repeatedly press the TV Input button to select TV.
- Select desired channel.
- Adjust antenna direction and attenuator.
- Adjust volume on TV.

To Watch TV from a Shore Cable:

- Hook to shore cable using the Cable port in the water service compartment.
- Turn off the antenna select button.
- Turn on the TV. Press TV Input button to select TV.
- Select desired channel on TV.
- Use volume control on TV to select desired sound level.

DVD Player (Optional):

- Press the Power button to turn DVD player on.
- Press the Open/Close button to open DVD tray.
- Place DVD onto tray. Close tray. DVD will load and play automatically.
- Repeatedly press the Input button on the TV until the DVD appears on the TV.

Home Theater Sound:

- Turn on the DVD player and insert DVD.
- Turn on the TV. Turn down TV volume.
- Adjust volume on the DVD player.

Listen to CDs:

- Turn on the DVD player.
- Insert a CD into the DVD player.
- Adjust volume to desired level.

iPod Dock:

- Turn on DVD player.
- Open iPod dock door.
- If necessary, install iPod adapter.
- Turn on TV. Press TV Input button until DVD screen displays.
- Repeatedly press DVD input select button to select iPod.
- Use the iPod controls to navigate, select and play media.

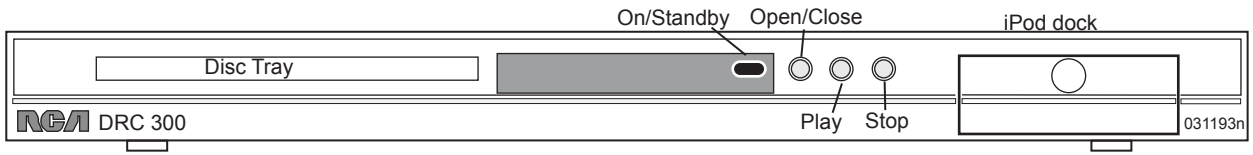

Bedroom DVD player (Optional)

SATELLITE SYSTEMS - PREWIRE

The motorhome is pre-wired with coaxial cables for a roof mounted satellite dish or for a stand alone system. The cables are located in the roof approximately 12" in front of the forward air conditioner. A sticker on the roof marks the location of the cable.



Roof sticker marks satellite cable location 031318f

NOTE:
Satellite receiver(s) not included.

Living Room Prewire

Telephone:
This cable comes from the telephone connection plate in the water service center. The telephone cord hooks to a satellite receiver to order pay per view programming.

HDMI:
This High Definition cable is connected to the exterior TV. Cable is used to connect an HD satellite receiver to the exterior TV.

Bed Sat:
This cable runs to the bedroom. Hook this cable to Satellite Out on the back of the satellite receiver to supply a non-HD satellite signal to the bedroom TV.

Sat:
This cable comes from the satellite connection plate in the water service center. This is used to hookup a portable satellite dish. Connect this cable to Satellite In on the satellite receiver.

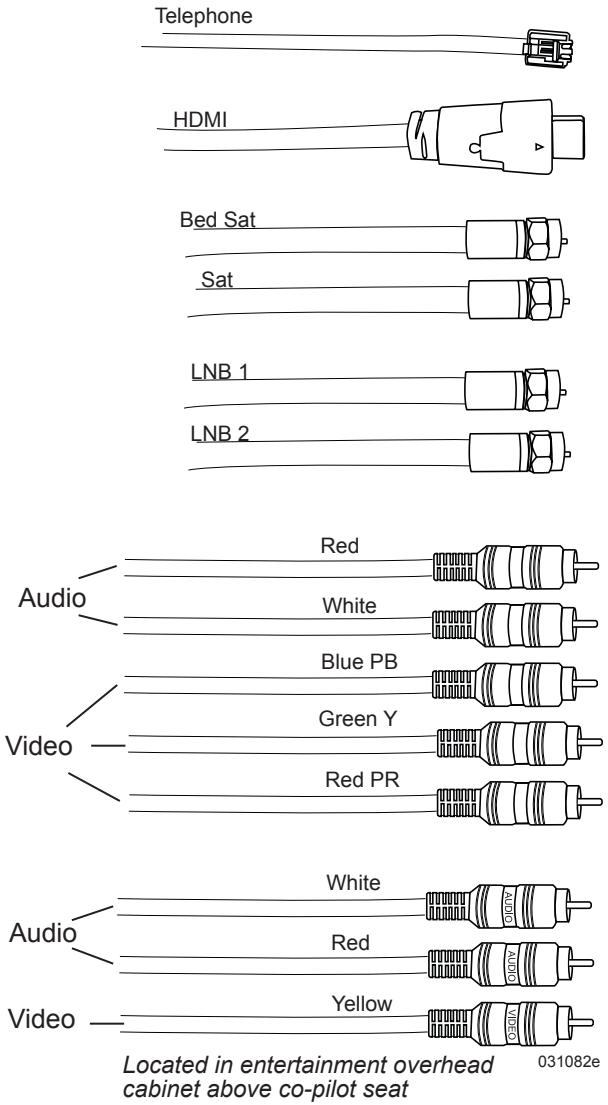

Located in entertainment overhead cabinet above co-pilot seat 031082e

LNB #1:
This cable comes from the roof mount satellite dish. It is used to hookup a standard definition satellite receiver. Connect this cable to Satellite In on the satellite receiver.

LNB #2:
This cable comes from the roof mount satellite dish. It is used in conjunction with LNB #1. Connect LNB cables 1 & 2 to a high-definition satellite receiver.

Component:
Video cables YPbPr (Red, Green & Blue) and audio cables (L&R) connect an HD satellite receiver to the main TV.

Composite (RCA):
Connects to the (optional) 32" O/head TV only. Used to connect a standard definition satellite receiver or game console.

Bedroom Prewire

Telephone:
This cable comes from the telephone connection plate in the water service center. The telephone cord hooks to a satellite receiver to order pay per view programming.

HDMI 1:
This High Definition cable is used to connect an HD satellite receiver to the bedroom TV.

HDMI 1:
This High Definition cable is used to connect a DVD player to the bedroom TV.

Bed Sat:

This cable runs from the front entertainment overhead. Hook this cable to Satellite Out on the back of the satellite receiver to supply a non-HD satellite signal to the bedroom TV.

LNB 3&4

These cables run from the roof mount satellite dish to connect an HD receiver.

NOTE:
LNB 3&4 will only work with the Winegard Trav'ler systems due to limitations of satellite equipment.

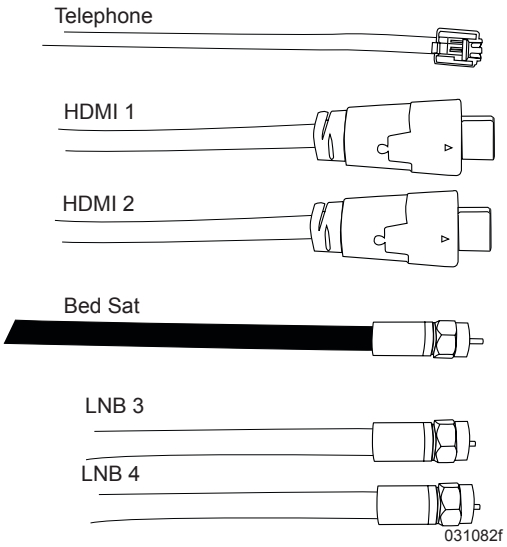

Located in bedroom entertainment cabinet

KVH R5 (Optional)

The KVH R5 system is designed to work with DISH network satellite receivers. The system includes an antenna (dish) and a power switch plate. The KVH system powers the antenna and sends information to a receiver (not included), which decodes the satellite signal from the antenna and sends it to the television. The system is designed to operate whether the motorhome is in motion or parked.

The satellite system does not include a satellite receiver or subscription.

INFORMATION:
Refer to the KVH R5 OEM manual for complete operating instructions and information.

NOTE:
Contact a service provider to activate the account. For specific satellite coverage areas and providers refer to the OEM manual.

NOTE:
The satellite system does not include a satellite receiver or subscription.

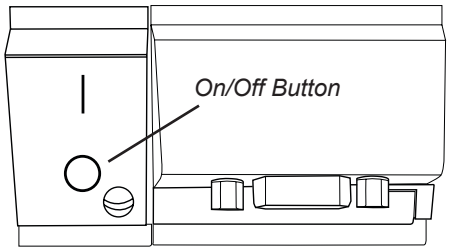

KVH R5. Designed for use with DISH network receivers

Turning On the System:

- Turn on the KVH satellite system by pressing the power button on the switch plate to the on position.
- Turn on the satellite receiver.
- Wait 30 to 60 seconds for the antenna to acquire the satellite signal.
- Turn on TV. Repeatedly press the Input button to select the input that the output of the receiver is connected to.
- It takes approximately one minute for the receiver to download guide data. Channels can be selected once the guide is downloaded. Use satellite remote control to select desired channel.

Turning Off the System:

- Press the Power button on the switch plate to the off position.

Monthly Maintenance:

- Periodically clean the dome with water and mild soap if necessary. Dirt buildup can affect satellite TV reception.
- Do not spray the dome with high-pressure water.
- Do not apply abrasive cleaners or volatile solvents, such as acetone, to the ABS dome.
- Do not use any compounds that react with plastic when cleaning the dome.
- Do not paint the dome.

CAUTION:
If a need arises to paint the radome, use only non-metallic automotive paint without a primer coat to avoid degrading the RF signal strength. Metallic paint impairs satellite signals.

TIP:
For optimum signal strength, keep the dome clean from dirt, bugs and other debris. Periodic washing of the dome with mild soap and water is recommended. If the motorhome is stored for long periods of time it is recommended that the system be put through a search procedure on a quarterly basis to keep all moving parts in good working order.

Technical Support:
- For assistance in operation or for technical support, call KVH technical support at 1-401-847-3327.

Winegard Trav'ler (Optional)

The Winegard system is compatible with virtually any DirecTV® receiver, including HD and DVR receivers. The system can also be programmed for use with SHAW direct Canadian satellite receivers and services. The system includes a roof-mounted antenna (SK-3005 America or SK-7002 Canada) and interface box. The interface box (shown) is used to raise and stow the antenna. The system does not include a receiver or subscription. Before ordering service from a satellite provider, ensure the service provider's receiver is compatible with the Winegard system. Consult the receiver manual or www.winegard.com for receiver compatibility.

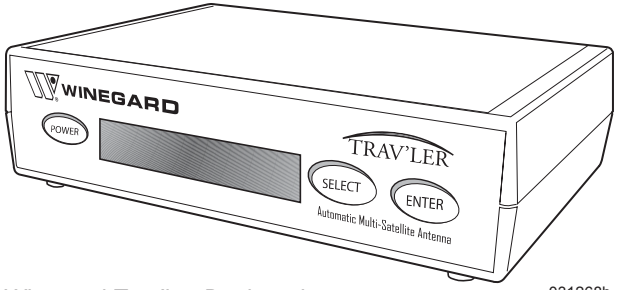

031268b

Winegard Trav'ler. Designed for use with DIrecTV receivers

NOTE:
The satellite system does not include a satellite receiver or subscription. Refer to the satellite receiver OEM manual for complete operating instructions and information.

NOTE:
Satellite service requires subscription activation. Contact your service provider to activate the account.

INFORMATION:
For specific satellite coverage areas and providers see the OEM manual.

Operation:
- Press and hold the Power button for two seconds or until the system displays Power On.

For Travel:
- Press and release the Power button to stow the satellite antenna. The interface box will not turn off until the satellite antenna is successfully stowed.

Technical Support:
- Call 1-800-788-4417 for Technical Support.

Satellite Wiring

The motorhome is pre-wired to accept a roof-mounted or portable satellite dish system. Factory installed composite (RCA), component (YPbPr) audio/video and HDMI cables are provided to the TVs so a satellite receiver or game console can be connected. A phone cable is provided for pay-per-view programming. The "Sat" coax connection located in the water service bay allows connection of a stand-alone dish.

NOTE:
There are a number of ways satellite reception can be obtained dependant upon: types of satellite dishes, equipment hardware, standard definition, high-definition and DVR receivers, satellite subscription providers etc. Due to available possibilities, only the most probable receiver installation diagrams are provided. Additional hardware and cabling may be required when installing satellite equipment.

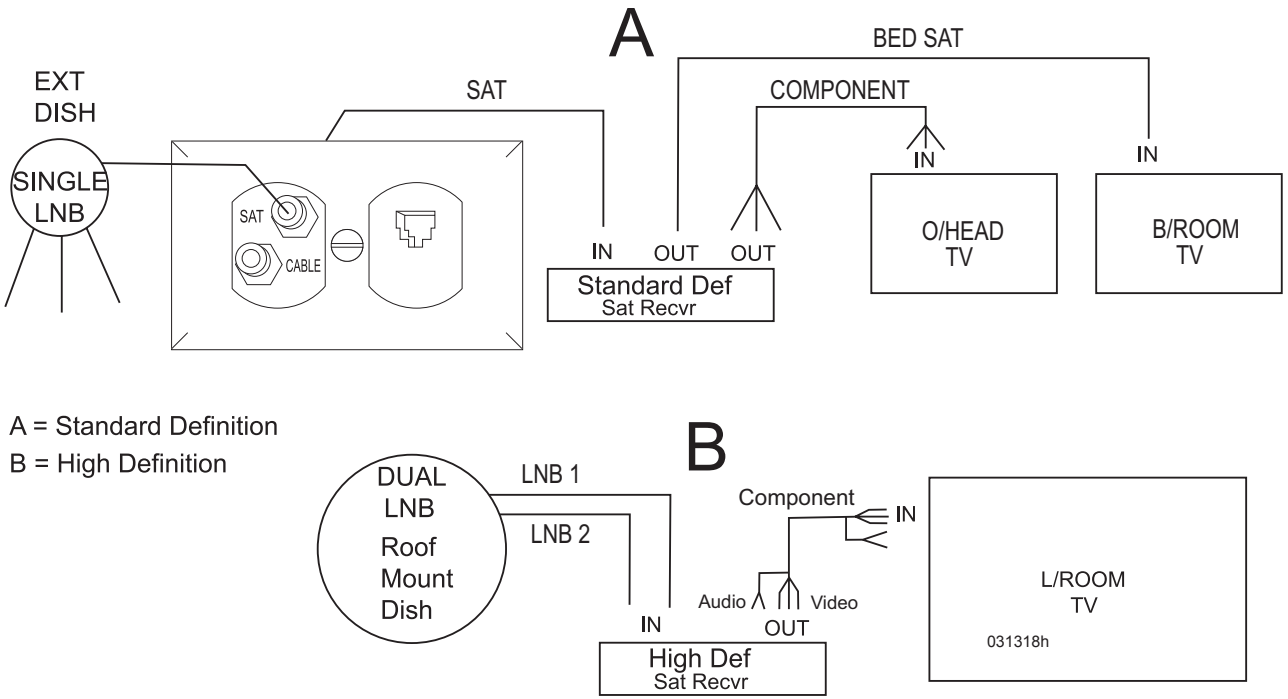

SYSTEMS CONTROL CENTER

The System Control Center enables a central location for many of the switches and control monitors used to operate the motorhome.

1. **HVAC Thermostat:** Controls furnace, roof A/C and fan.
2. **Inverter Remote Panel:** Turns inverter on or off and monitors battery charging status.
3. **Power Control Systems Monitor:** Displays shore service amperage and voltage. Monitors and controls load shedding.
4. **Aqua Hot:** Controls Aqua Hot diesel and electric functions.
5. **Tank Monitor Panel:** Displays the status of the black and grey holding tanks, fresh water tank and propane tank. Also displays status of house batteries.
6. **Tank Test Switch:** Switch displays tank and house battery status on the monitor panel.
7. **Fresh Tank Heat (40' only):** Turns on the fresh water tank heat pad.
8. **Generator:** Starts and stops the generator.
9. **Slideout Room Controls:** Extends and Retracts the front slideout rooms.
10. **Slideout Room Controls:** Extends and retracts the rear slideout rooms.

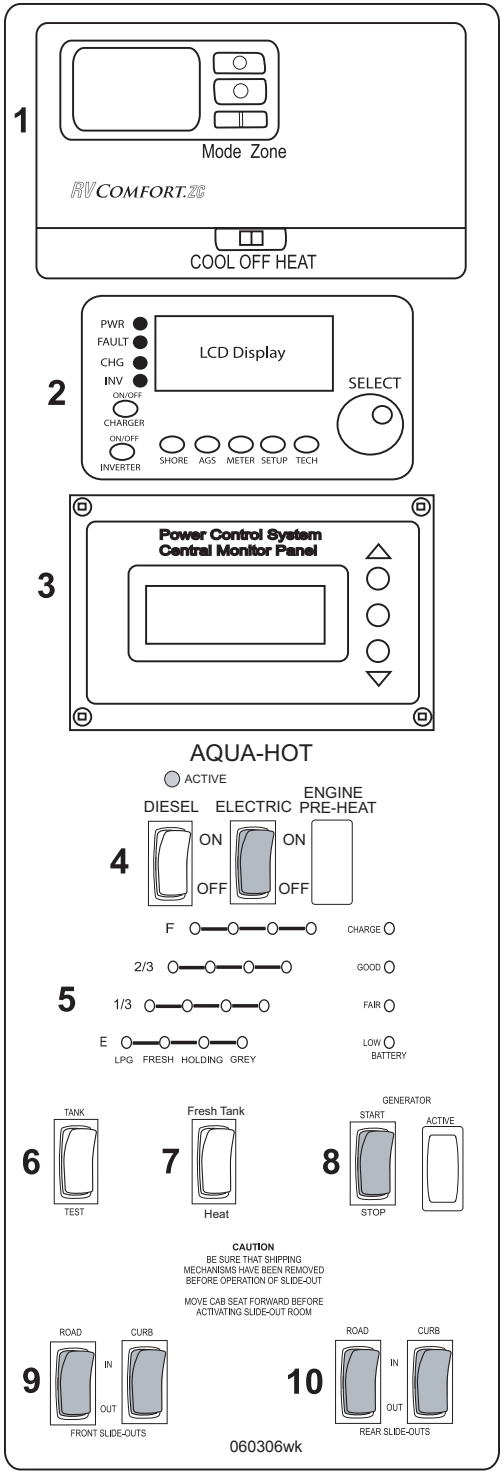

NOTES

Water Systems

Section 6

WATER SYSTEMS - INTRODUCTION 134
WATER TANKS 134
Measurements & Calibration 134
FRESH WATER 135
Fresh Water Fill 135
WATER TANK 135
Fresh Gravity Fill 135
City Water Hook-Up 135
WATER PUMP 136
Water Pump Troubleshooting 136
WATER FILTER 137
WATER SYSTEMS 138
Troubleshooting 138
Disinfecting Fresh Water 138
FAUCET SCREENS 138
WASTE WATER SYSTEMS 139
Proper Waste Disposal 139
Do Not Put in Waste Holding Tanks 139
What to Put in Holding Tanks 139
WASTE PUMP 140
TOILET 141
Pedal Flush 141
Electric Flush 142
Cleaning 143
Maintenance 144
Troubleshooting 144
Winterization 144
DRAIN TRAPS & AUTO VENTS 144
COLD WEATHER CONDITIONS 144
Water Center Heater 144
Fresh Tank Heat Pad (40' only) 145
Cold Weather Storage 145
WINTERIZATION 145
Using Air Pressure 146
Using Nontoxic Antifreeze 146
De-Winterization 147
WATER SERVICE CENTER 148
WATER SYSTEM DIAGRAM 149

WATER SYSTEMS - INTRODUCTION

This section contains information about the operation and care of various water system equipment found in the motorhome. Optional water equipment will also be discussed, so not all information may be applicable to each motorhome. More detailed information with CAUTION or WARNING instructions for various equipment, other than what is found in this section, can be found in the OEM manuals in the owner information box.

Water Consumption:

Newcomers to a self-contained motorhome soon discover water does not last long unless consumption is drastically reduced. For example, less water can be used for showering if the shower is turned off while soaping down, then turned back on to rinse. Plenty of water will be available to meet personal needs once habits are adjusted.

Plumbing Overview:

The motorhome plumbing system can be operated independantly of shore service. The plumbing system holding tanks include a fresh water tank, a grey water (liquid waste) tank and a black water (solid waste) tank. Sinks, shower and optional washer drain into the grey tank, and the toilet drains into the black tank. An onboard water pump will supply all faucets and toilets with water from the fresh tank. Close monitoring of the holding tanks is necessary when not connected to shore service.

Water Service Center:

The motorhome plumbing system can be attached to shore services (city water and sewer) at the roadside water service center. The service center includes the city water/fresh tank fill connection and the grey and black tank valves, drains and tank flush connections. If shore services are available, the shore water supply (city water) can be used to pressurize the water system and the onboard water pump can be turned off. The grey and black tanks share a common termination drain. A sewer hose can be attached from the drain to the shore sewer facility. It is recommended to leave the black tank drain valve closed and the grey tank drain valve open when hooked to shore services to avoid a clogged sewer hose. Drain and flush the grey and black tanks after dumping and/or prior to departure.

Fresh Water System:

The fresh water system consists of a fresh water tank, water pump, pressure regulator, gravity fill connection, water filter, city/fresh water connection and a water hose for potable use only. Proper care of the hose is necessary. After each use, drain the water hose and coil the hose neatly. Attach the ends together to keep dirt, debris and insects out of the hose.

Waste Water System:

The waste water system consists of a liquid waste holding tank (grey water), sewage holding tank (black water), flush system, toilet, sewer hose and drains.

WARNING:
Water is electrically conductive. Do not use any electrically powered item or electrical outlet that may be exposed to a water source. Such use can result in a serious shock, causing injury or death.

WATER TANKS
Measurements & Calibration

The motorhome is equipped with a monitor panel to aid in managing the storage tanks. The monitor panel is located on the Systems Control Center in the hallway area. A second monitor panel is located in the roadside water service center.

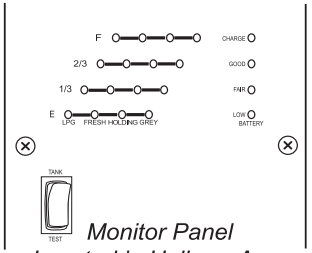

Monitor Panel Located in Hallway Area

060333

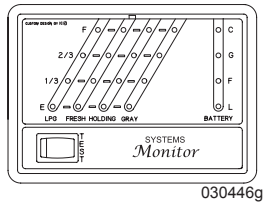

030446g

Monitor panel located in service center

The switch marked Test will display the level of the storage tanks and propane tank. The scale is graduated with colored lights to indicate the level.

Propane and Fresh Tank	Fresh Water and Holding Tanks
Red = Empty	Green = Empty
Red = 1/3 Full	Yellow = 1/3 Full
Yellow = 2/3 Full	Red = 2/3 Full
Green = Full	Red = Full

FRESH WATER
Fresh Water Fill

When connecting the motorhome to fresh water, use a hose manufactured and labeled "for potable water." This ensures that the hose is safe for drinking water. It is recommended to install a water pressure regulator at the water source to protect the potable hose and plumbing system from excess pressure.

WARNING:
Hose and hose fittings not manufactured for potable water can contain unsafe levels of lead. It is highly recommended to use only fresh water supply hoses manufactured for potable water use.

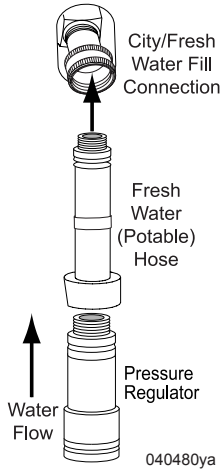

- Connect the pressure regulator to the water source.
- Connect potable hose to the regulator then to the City Water/Fresh Tank Fill connection located in the water service center.
- Set the water control lever to the Tank Fill position.
- Turn on the water.
- Periodically press the Test switch on the monitor panel to gauge fill rate. Do not leave the motorhome unattended while filling the fresh water tank.
- The tank is nearing full when the light marked "F" illuminates. When the tank is completely full, water will flow out an overflow tube under the motorhome.
- Turn off water supply and return the water control lever to City Water position.
- Disconnect the potable hose. Remove pressure regulator. Store the hose with both ends connected to prevent debris from entering the hose.

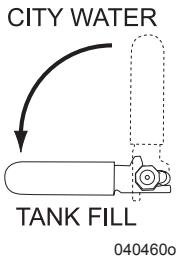

CAUTION:
It is recommended to place a pressure regulator at the water source to protect the potable water system from over-pressurization. Some water sources have high water pressure, particularly in mountainous regions. High water pressure is anything over 55 psi (pounds per square inch). Excessive water pressure may cause leaks in water lines and/or damage the water heater. Excess pressure can cause the water hose to swell and burst.

WATER TANK
Fresh Gravity Fill

The gravity fill inlet allows fluids to be introduced directly into the fresh water tank. Water can be poured directly from a container into the fresh water tank. The gravity fill inlet can be used to pour disinfecting solution into the fresh water tank. Use only potable water sources, solutions and delivery systems when using the gravity fill inlet.

Filling the Tank:
- Unscrew fill cap taking care to keep cap and inlet clean.
- Insert potable water hose into inlet.
- Fill tank until water overflows from inlet.

NOTE:
Do not leave the gravity fill inlet unattended when in use.

City Water Hook-Up

When connecting the motorhome to fresh water, use a hose manufactured and labeled for potable water to ensure the hose is safe for drinking water. It is recommended to install a pressure regulator at the water source to protect the potable hose and the plumbing system from excess pressure.

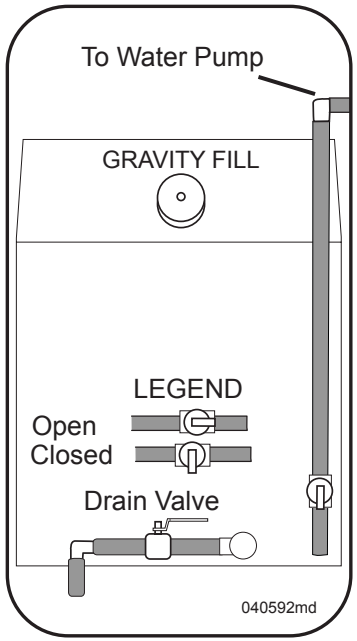

Gravity fill located on fresh water tank (40' only)'

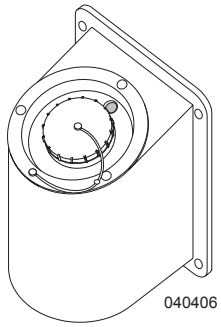

Gravity fill located in water service center

- Install hose with pressure regulator to the water source.
- Connect the potable hose to the City Water/Fresh Tank Fill connection.
- Set City Water/Fresh Tank Fill handle to the City Water position.
- Turn on the water.
- The water pump can either be off or on. It will not affect the water pump to leave it on.
- Slowly open each faucet, one at a time, to purge trapped air.

WATER PUMP

The water pump pressurizes the fresh water system when not connected to city water. The water pump is self-priming, operating on demand as water is used. The water pump is located in the water service center.

To Operate the Water Pump:

- Ensure the house battery disconnect switch is on.
- Battery cut-off switch must be on.

WARNING:
Before leaving the motorhome for extended periods of time (i.e. overnight or longer) the city water source and water pump must be turned off. The manufacturer is not responsible for damage caused from neglect.

Water Pump Switches are Located:

- The galley
- Bathroom.
- Water service center.

To Turn the Water Pump On or Off:

- Momentarily press the water pump switch. The indicator lamp illuminates when the water pump is turned on.

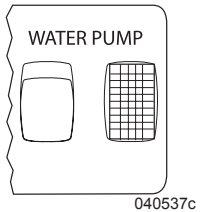

Service Center Water Pump Switch

WARNING:
Do not continue water pump operation if the fresh water holding tank is empty. Damage to the water pump or electrical supply system may result.

To operate the water pump after unhooking from a city water source or after storage:

- Close all drain valves and low point drains.
- Fill the fresh water tank.
- Open the hot and cold water valves of each faucet.
- Turn the water pump on. Wait for the water lines and the hot water tank to fill.
- Close each faucet when it delivers a steady stream of water (cold water faucets first).

Water Pump Troubleshooting

Vibration induced by road conditions can cause the plumbing or pump hardware to loosen. Check the water pump system for components that are loose. Many symptoms can be resolved by tightening the hardware.

Water pump will not start or blows the fuse:

- Check the electrical connections, fuse or breaker, main switch and ground connection.
- Is voltage present at the pressure switch on the pump? If voltage is present, the pressure switch may be faulty. As a test, temporarily bypass the pressure switch.
- Check the charging system for correct voltage and good ground.
- Check for an open or grounded circuit or motor.
- Check for a seized or locked diaphragm assembly (water frozen).

Water pump will not prime or sputters (No discharge/motor runs):

- Check the pump inlet strainer for clogs and debris.
- Check the tank for water or air collected in the water heater.
- Check the inlet tubing and plumbing to see if it is sucking in air at plumbing connections (vacuum leak).
- Check for proper voltage with the pump operating.
- Check the pump housing for cracks or loose drive assembly screws.

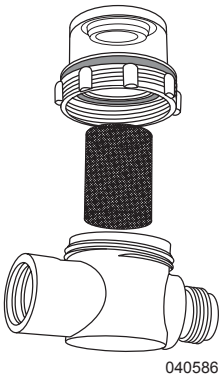

Water pump inlet screen: *Clean every two months.*

Water pump will not shut-off or continues to run when the faucet is closed:

- Check the city water/fresh tank fill handle is fully set to one position or the other.
- Check the output (pressure) side plumbing for leaks and inspect for a leaky toilet or valves.
- Look for a loose drive assembly or pump head screws.

Water pump is noisy or rough in operation:

- Check for plumbing that may have vibrated loose.
- Does the mounting surface multiply noise (flexible)?
- Check for mounting feet that are loose or compressed too tight.
- Look for loose pump head to motor screws.

Water pump is rapid cycling:

- Look for restrictive water flow in the faucets or shower heads.

WATER FILTER

A whole house water filter is located in a curbside compartment. Change the water filter after 1,000 gallons of use or sooner if water flow is noticeably reduced.

INFORMATION:
For specific water filter information, cautions and additional filter replacements consult the water filter OEM instructions or contact Shurflo Customer Service at 1-800-854-3218.

CAUTION:
Protect filter from freezing or damage to the system could occur.

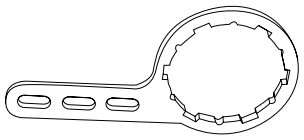

Water Filter Removal Wrench

Filter Removal:

- Turn off the water supply and the water pump.
- Open faucets to bleed off pressure.
- Unscrew the filter bowl using the bowl wrench.
- Check O-ring for damage and lubricate if necessary. O-ring should be replaced every third cartridge change to ensure proper sealing.
- Remove the old cartridge and discard.
- Empty any remaining water in the bowl.

Filter Installation:

- Insert new cartridge into filter bowl.
- Screw filter bowl back onto head and hand tighten securely.
- Turn on water pump or city water.
- Thoroughly flush and purge air from the system by opening faucets and running the water.
- Check for leaks.

Filter Replacement: RV-10C1

INFORMATION:
Replacement filter number is accurate at time of printing. Confirm replacement filter number before ordering or obtaining a replacement.

To Winterize:

- Winterize the motorhome.
- Unscrew the filter bowl using the bowl wrench.
- Remove the old cartridge and discard.
- Screw filter bowl back onto filter head and follow instructions in ***"Winterization"***.

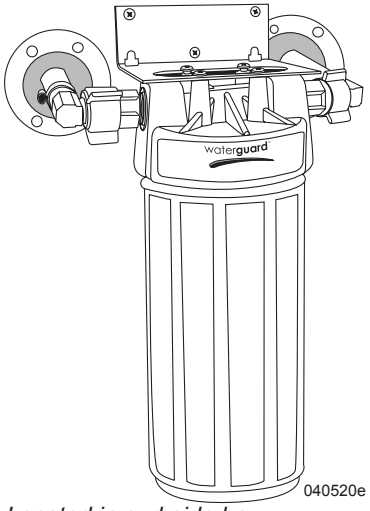

Located in curbside bay

To De-Winterize:

- Insert new cartridge into filter bowl.
- Screw filter bowl back onto head and hand tighten securely.
- Turn on water pump or city water.
- Thoroughly flush and purge air from the system by opening faucets and running the water.
- Check for leaks.

CAUTION:
O-ring must be properly seated in the groove of the lower housing or a water leak could occur.

WATER SYSTEMS
Troubleshooting

If the water pump cycles after closing the faucets, drain valves and inlet valves, a leak may be present. Check for leaks around fittings, valves, filter and connections of the hot and cold water system. If problems continue, take the motorhome to a qualified service technician for repair.

Disinfecting Fresh Water

Disinfecting the water system with household bleach (superchlorination) protects against bacteriological or viral contamination from common water sources.

Disinfect the fresh water system:

- If the motorhome is new.
- If the motorhome has been in storage.
- Every three months during use.

- Remove and discard water filter cartridge (See Water Filter). Re-install filter bowl without cartridge.
- Set water heater bypass valves to Bypass. This ensures that none of the prepared disinfecting solution enters the water heater. Refer to the water heater OEM instructions on flushing the water heater.
- Prepare a household chlorine bleach solution of 1 gallon water and ¼ cup of chlorine bleach. Use 1 gallon of solution for every 15 gallons of tank capacity. This mixture puts a 50 ppm (parts per million) residual in the water system and acts as a quick-kill dosage for harmful bacteria, viruses and slime-forming organisms. Concentrations higher than 50 ppm may damage the water lines and/or tanks.
- Drain the fresh water tank. Close the drain and pour the concentrated solution into the fresh water tank using the gravity fill.
- Top off the tank with fresh water.
- Turn the water pump on.
- Individually open each faucet, hot and cold valves, and run the water until there is a distinct chlorine bleach odor. Do not forget the shower faucets.
- Turn off all faucets and allow the system to stand for four hours.
- Drain the system and flush with fresh water repeatedly until the water system no longer smells or tastes like chlorine bleach.
- Install the new water filter cartridge.
- Set water heater bypass valves to Normal Flow position.

<u>INFORMATION:</u>
Household bleach is 5.25% Sodium Hypochlorite. Higher concentration will increase PPM ratio.

FAUCET SCREENS

Fresh water sources vary by location. Build up of lime deposits, or debris in the faucet screen, will restrict or plug the flow of water coming from the faucets. Should the flow of water reduce, the filter screen in the faucet head may be clogged. All faucet screens should be checked and cleaned every two weeks of use or as needed.

- The bathroom faucet screen is located on the outlet side of the faucet and held in place with a threaded collar.
- The kitchen faucet has two screens, one located at the faucet head, the other where the hose attatches to the faucet manifold assembly. The hose must be removed to access both screens.
- Clean screen using a small soft brush and de-liming solution.
- Reinstall screen and check water flow.

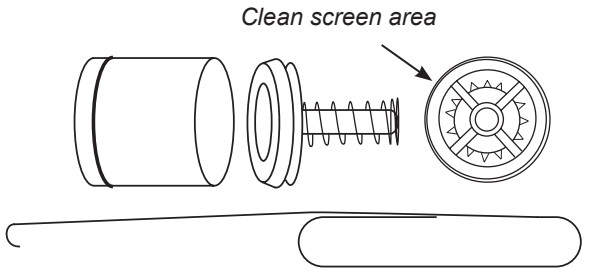

Bend a paperclip to help remove kitchen faucet screens

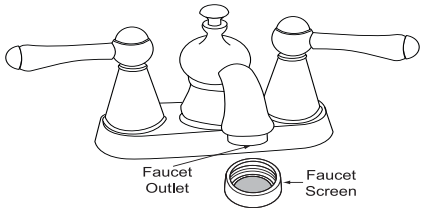

WASTE WATER SYSTEMS
Proper Waste Disposal

Dumping raw sewage from toilet holding tanks, except at authorized dumping stations, is universally prohibited. Most National, State and private parks have either a central dump facility or campsite hook-up for sewage. Many modern rest areas along the interstate now have dump stations available. Woodall's Campground Directory, Trailer Life's RV Campgrounds and Services Directory, Rand McNally's Campground and Trailer Park Guide, Good Sam Park Director (Good Sam Club) and other similar publications list dumping stations. Some major oil companies also offer dump facilities at select stations.

Do Not Put in Waste Holding Tanks

- Do not use strong or full strength detergents to deodorize and disinfect. Use odor control chemicals made especially for holding tanks.
- Do not use automotive antifreeze, ammonia, alcohol or acetone in holding tanks. These products will dissolve plastic.
- Do not use standard household tissue that remains in one piece. Paper designed specifically for holding tanks is available at most RV supply stores. Facial tissue is thicker, softer and stronger than rapidly dissolving tissue. White toilet paper dissolves faster than colored. To test tissue dissolvability, immerse one tissue square into a jar of water. Shake the jar five times to determine how the tissue disintegrates.
- Do not dispose of table scraps or cooking grease into the tanks. They can clog pipes or damage termination valve seals.

CAUTION:
Do not dispose of sanitary supplies or other non-dissolving items into the system. Facial tissue, wet strength tissue, paper towels or an excessive amount of toilet tissue can create clogging in the holding tank system.

CAUTION:
Do not use any products that contain petroleum distillate or ammonia in place of RV odor controlling chemicals. Petroleum distillate or ammonia will damage the ABS plastic holding tanks and seals.

What to Put in Holding Tanks

Grey Water Tank:
The grey water waste tank stores the sink, shower and clothes washer (if equipped) drain water. A reduced mixture of chemicals may help to control odor in the grey tank.

Ensure that there is enough liquid in the holding tanks prior to dumping the waste holding tanks to provide a smooth flow through the valve, termination drain and sewer hose. Empty the waste holding tanks weekly to prevent stagnation and overfilling.

Black Water Tank:
To help prevent buildup, pre-treat the sewage holding tank with a few gallons of water and an odor-control chemical (available at most RV supply stores). First, add approximately three gallons of water to the holding tank. Next, add the chemicals, in accordance with the manufacturer instructions. Pour mixture through toilet to the holding tank. Be careful not to spill the chemical on hands, clothing, toilet bowl or carpet. Hot weather conditions may require adjusting the amount of chemical used to control odor. Repeat the chemical pre-charge each time the black tank is cycled.

WARNING:
Most chemical mixtures for holding tank odor control are poisonous. Follow the product manufacturer's directions and warnings when using holding tank additive. Do not use products that contain petroleum distillate or ammonia in place of RV odor controlling chemical. Petroleum distillate or ammonia will damage the ABS plastic holding tanks and seals.

WASTE PUMP

The waste pump (Sani-Con system) is a self-priming macerator pump. Waste is discharged through a 1½" outlet hose that connects to a sewer connection. It is recommended to wear disposable gloves, safety glasses and appropriate clothing when operating the Sani-Con. The waste pump operates on 12 Volts DC from the house battery. The house battery disconnect switch must be on for the Sani-Con system to operate.

INFORMATION:
Refer to the OEM Sani-Con manual or visit the website: www.emptythetanks.com

ATTENTION

This R.V. is equipped with an R.V. Sani-Con Waste management device. In order to assure trouble free service with this device, it is imperative that no foreign object enter the commode. Items that include, but are not limited to, personal hygiene products, cigarette butts, paper towel, etc. are considered foreign. Introduction of these or any other products considered to be of foreign nature will void the manufacturer's warranty. 72-139 100220

WARNING:
Do not flush personal hygiene products, cigarette butts, paper towels, table scraps, grease, any tissue that remains in one piece or any object that can be considered foreign. These objects will damage the Sani-Con system and void manufacturer's warranty.

WARNING:
Never leave the Sani-Con pump unattended while in use. Do not allow pump to run dry. Damage to the pump impeller and Sani-Con system will result and void manufacturer's warranty.

To Empty the Holding Tanks:

- Close the black tank (solid waste) and grey tank (liquid waste) termination valves.
- Remove the Drip Cap from end of discharge nozzle (see illustration).
- Remove termination drain outlet cap.
- Secure Sani-Con inlet hose to the termination drain outlet by aligning hose coupler tangs with termination tabs.

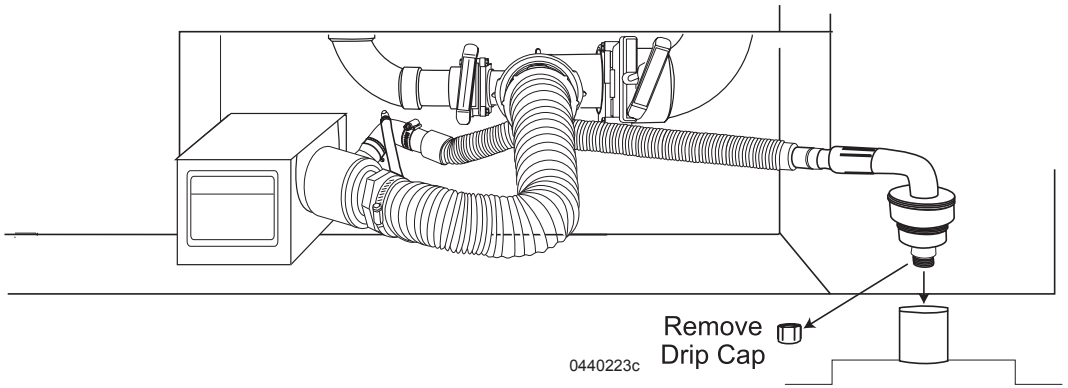

- Twist coupler clockwise to lock coupler to termination outlet.

WARNING:
Remove drip cap from end of discharge nozzle (see illustration). If the Sani-Con is turned on with drip cap in place, turn pump off BEFORE removing drip cap. Allow at least 30 seconds for pressure to dissipate before removing drip cap.

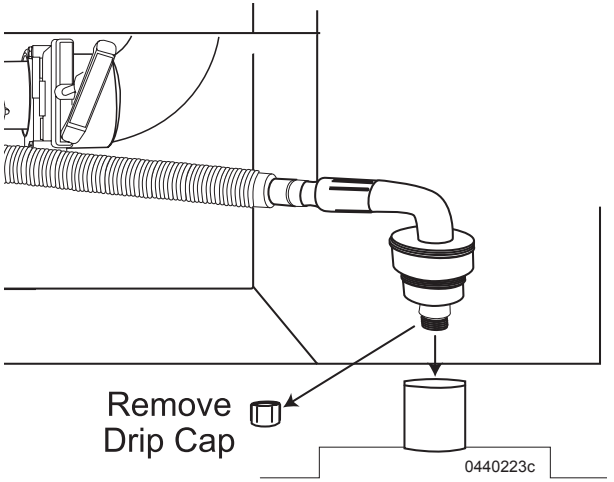

- To prevent leaks, ensure all hose clamps are tight prior to operation.
- Insert discharge nozzle into sewer connection (dump station). The discharge nozzle will fit 3" and 4" threaded and non-threaded sewer connections. Ensure discharge nozzle is firmly and securely in place prior to operation.

- Verify pump operation by opening the grey water valve then momentarily (less than one second) turn on and off the Sani-con switch. Close grey water valve. If pump does not operate see Troubleshooting before proceeding.



- Open the black tank valve.
- Turn on the Sani-Con switch.
- Allow the black tank to empty.
- Turn off the Sani-Con pump when the black tank is empty. Close the black tank valve.
- Open the grey tank valve.
- Turn on the Sani-Con pump. Allow the grey tank to empty.
- Turn off the Sani-Con pump when the grey tank is empty. Close the grey tank valve.

Using the Black Tank Flush:

NOTE:
Empty the holding tanks before operating the black tank flush system.

CAUTION:
Never operate the flush system unattended. Flooding may occur. Use the flush system each time the tanks are cycled to prevent clogging of the spray nozzle.

- Connect a non-potable water hose with pressure regulator to a water source. Connect the other end of the hose to the Tank Flush fitting in water service center.
- Open the black tank valve if closed.
- Turn on the water and flush the black tank for three minutes. Do not leave the system unattended during operation.
- While flushing the tank, briefly turn on the Sani-Con pump to help flush impeller and housing then turn off the Sani-Con pump.
- Turn the water off after flushing the tank. If desired, close black tank valve then add water to the black tank through the toilet then cycle the black tank again otherwise disconnect and stow the non-potable hose and pressure regulator.
- Close the black tank drain valve.
- Use hand over hand method to clear liquid from Sani-Con discharge hose.
- Secure Sani-Con drip cap (required by law in some states) then stow discharge hose for travel.
- If desired, add chemicals to the holding tanks to control odor. Follow the chemical manufacturer's directions.

Grey Water Bypass:

The grey water bypass system allows continuous grey water flow. The grey water uses gravity to drain from the tank to the pump through the bypass hose into the sewage service. The bypass hose "T-s" into the Sani-Con discharge hose on the outlet side of the macerator pump.

Troubleshooting:

- The house battery disconnect switch must be on.
- Check the 20 Amp fuse in the House 12 Volt DC Distribution Panel.

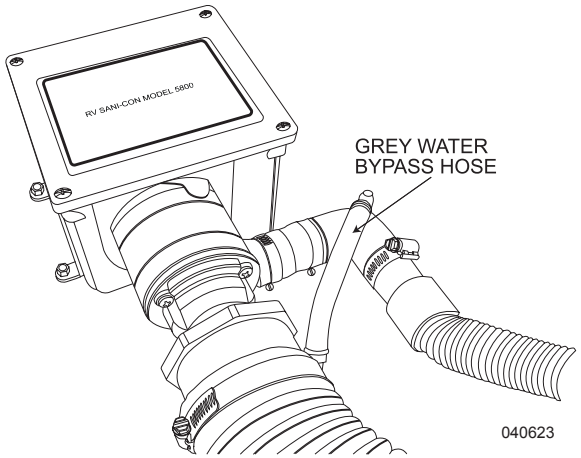

TOILET
Pedal Flush

The toilet uses water from either the fresh water tank or a city water supply. The water pump must be on or connected to city water. The toilet flushes directly into the sewage holding tank (black water).

CAUTION:
To prevent accumulation of solids below toilet, add several gallons of water to the holding tank before use. Most chemical mixtures for holding tank odor control are poisonous. Follow the product manufacturer's directions and warnings when using any holding tank additive.

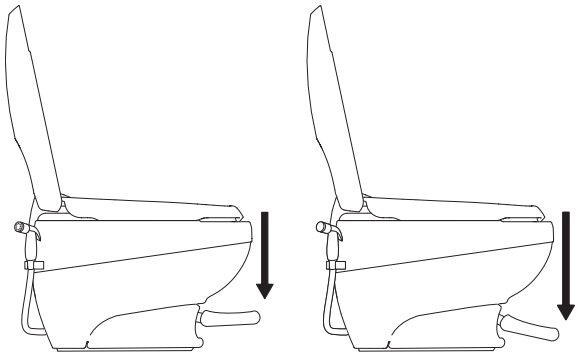

Pedal Flush 040467

NOTE:
Do not dispose of sanitary supplies or other non-dissolving items into the toilet. Facial tissue, wet strength tissue, paper towels or an excess toilet tissue can clog the tank or termination valve.

- To add water to the toilet before using, press and hold the pedal halfway until the desired water level is reached. Generally, more water is required only when flushing solids.
- To flush the toilet, push and hold the lever all the way down.

Water flow pressures vary. Therefore, holding the flush lever down for several seconds may be required. Release the flush lever, allowing it to snap back, ensuring a positive seal around the flush ball. A small amount of water should remain in bowl.

- To operate the hand sprayer, step on foot pedal then press thumb lever on the sprayer. Direct water into the bowl.

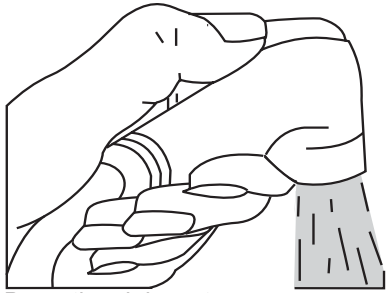

Press thumb lever to spray 040397

Leak between closet flange and toilet: Confirm that flange screws are snug. Do not over-tighten screws. If leak continues, remove toilet and check flange height. Adjust the flange height to 7/16" above floor, if necessary. Replace flange seal if damaged.

Poor flush: Flush should be obtained within two to three seconds. If a problem persists, adjust the water level. If problems continue, the water pressure or flow rate may be low. Remove the water supply line and check flow rate. Flow rate should be at least ten quarts (9.5 liters) per minute. Water pressure should not be below 25 psi.

Bowl will not hold water: Check for and remove any foreign material from blade seal track. If blade seal is worn, replace.

Electric Flush

The toilet is an electric macerating toilet. To avoid damage, flush only organic material and toilet paper. The house battery cut-off switch must be on for the toilet to operate.

CAUTION:
To prevent accumulation of solids, add several gallons of water to the holding tank before use. Most chemical mixtures for holding tank odor control are poisonous. Follow the product manufacturer's directions and warnings when using any holding tank additive.

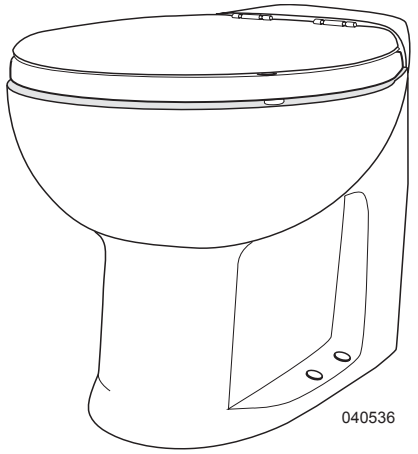

040536

NOTE:
Do not dispose of sanitary supplies or other non-dissolving items into the toilet. Facial tissue, wet strength tissue, paper towels or an excess toilet tissue can clog the tank or termination valve.

Water Saver Flush:

- Press and release left button. This mode is recommended for flushing liquids and small amounts of toilet paper only.

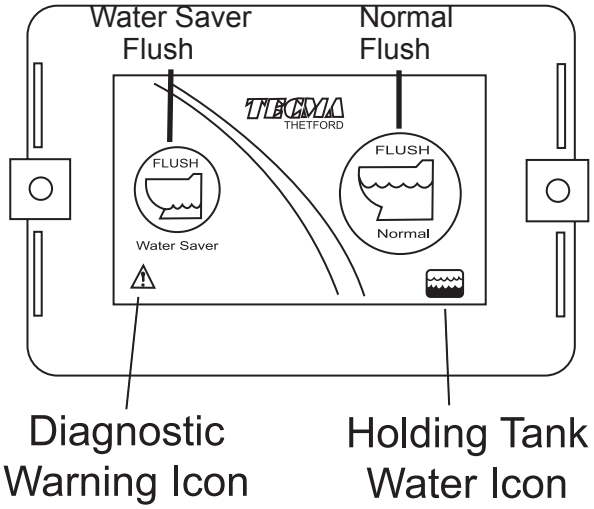

Normal Flush:
- Press and release right button. This mode is recommended for flushing solids and toilet paper.

Empty Bowl:
- Press both buttons simultaneously and release. This empties the bowl and leaves it dry for travel.
- Press either button once to add water, run motor, and return to normal use.

Programming the Water Level:
The water level in the bowl can be programmed to different levels. The minimum recommended level is ½" above the bowl outfall hole. After changing water sources such as city water to the water pump, the water level may need to be adjusted.

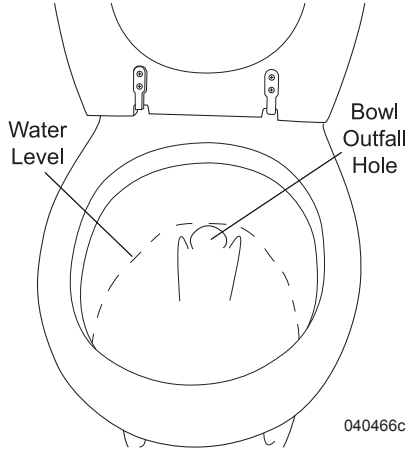

- Press both buttons on the toilet control panel and hold.
- LEDs will flash indicating the toilet is in program mode.
- Release buttons to set the level of standing water in the bowl.

Holding Tank Level Sensors:

The toilet system has tank level sensors mounted on the outside of the black tank. On the toilet control panel is a water icon located in the bottom right corner.

Water Icon Not Lit:
- Toilet system is off, in sleep mode or not receiving power.

Water Icon Lighted Green:
- Toilet system is on and the holding tank is between empty and half full.

Water Icon Lighted Yellow:
- Toilet system is on and the holding tank is at least half full.

Water Icon Lighted Red:
- Toilet system is on and the holding tank is full.

Full Tank Lockout:
- To prevent overfill or flooding, the toilet will not flush when the system senses a full tank. This occurs when the Water Icon is red.

Emergency Override:
If the tank is full (Water Icon is red) and an emergency flush is needed, do the following:
- Press and hold either flush button for 6 seconds to flush toilet.

<u>WARNING:</u>
The LED warning icon will flash when the black tank is full. Flushing may cause tank overflow and potential flooding.

LED Sleep Mode:
To save power consumption when not in use, an automatic LED sleep mode is programmed on this control panel.

If the toilet is not used for 8 hours, the keypad LED lights will go out. Press any button to activate the keypad.

Cleaning

Clean the toilet bowl with a mild bathroom cleaner. Do not use chlorine or caustic chemicals, such as drain opening types, as they will damage the seals. Clean out the system by flushing several gallons of fresh water through with one cup of dry laundry detergent.

Add odor control deodorant, in the amount specified for the holding tank capacity, after cleaning and every few days during use.

POISON:
Most chemical mixtures for holding tank odor control are poisonous. Follow the product manufacturer's directions and warnings when using any holding tank additive.

Maintenance

To find leaks, check behind or under toilet. Take four or five sheets of toilet tissue and wipe all the water line connections. Start at the top of the unit and work downward. When the tissue comes in contact with leaking water it immediately changes texture.

NOTE:
Before storing the motorhome, the toilet must be flushed repeatedly to remove any solids that may have built up.

CAUTION:
If the motorhome is in storage for six months, spray silicone on the toilet valve and work it back and forth. Perform this maintenance monthly (silicone will evaporate in about 30 days). Do not use a petroleum-based lubricant, damage to the seals will occur.

Toilet Shut-Off Valve:
A shut-off valve is located behind the toilet. In the event of an emergency the water line that leads into the toilet can be shut off.

Troubleshooting

- The toilet is powered by a 40 Amp auto-reset mini-breaker located behind the AC load center.

Winterization

The toilet must be winterized to avoid freeze damage. Press both buttons until water is purged from macerator. Add 3 pints antifreeze to bowl then press then flush to ensure macerator and discharge line is winterized.

DRAIN TRAPS & AUTO VENTS

Sinks, shower and clothes washer (if equipped) drains incorporate a water trap (P-Trap) and auto vents to prevent waste water holding tank odor from entering the motorhome.

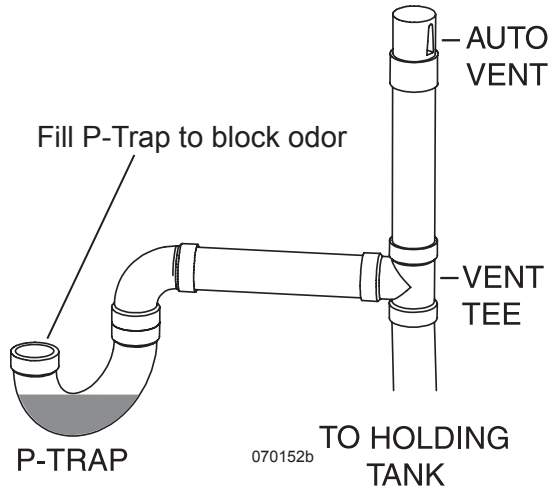

Drain Traps:
P-Traps are usually within 54" of a vent tee and must contain water to block odors. During storage water can evaporate and allow odor into motorhome. If odor is detected, run water into sinks, shower and clothes washer (if equipped) to fill P-Traps.

AutoVents:
The auto vent is designed to assist in the smooth flow of water in the drain without creating a vacuum. If stuck in the open position the auto vent can allow grey odors to enter the motorhome. Some auto vents can double as "clean outs" in the event the line needs to be snaked out.

COLD WEATHER CONDITIONS

Extended use in below freezing (32° F./0° C.) weather will require operation of the furnace to protect interior water lines, fixtures, water storage tanks and pumps. Exposed drains may freeze quickly. If in doubt about what temperature the motorhome will tolerate, winterize with potable antifreeze. Cold temperature can adversely affect water systems below the floor level because the furnace does not provide heat to these components.

Water Center Heater

A small Aqua Hot heat exchanger is located in the water service center to help prevent freezing in the water service center. The Aqua Hot supplies coolant to the heater and must be turned on to supply heated coolant to the exchanger. Turn on the Aqua Hot when freezing temperatures may occur.

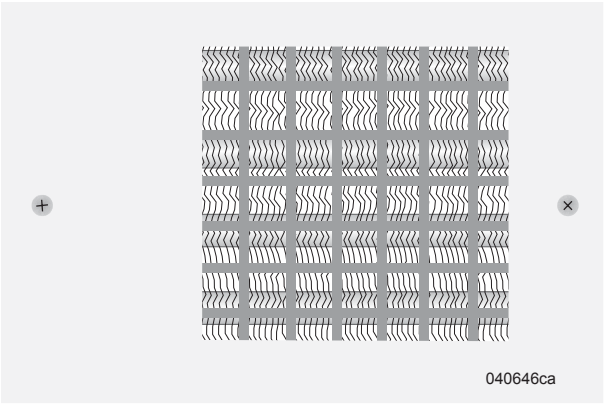

Typical heat exchanger

System Operation:

1. Turn on the Aqua Hot.
2. Set thermostat to Gas in Zone 4.
3. Adjust Aqua-Hot bay thermostat, located in water center, to approximately 40º F.

As temperature reaches approximately 40º F., the blower on the heat exchanger will run to help prevent water center freeze-up.

CAUTION:
While the water center is equipped with a heat exchanger, it cannot prevent freeze-up in extreme cold.

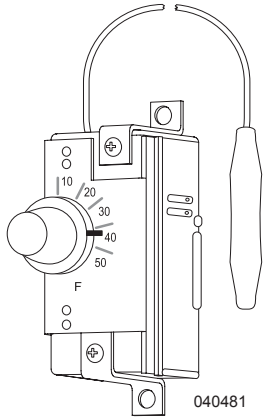

Aqua-Hot Bay Thermostat located in water center

Fresh Tank Heat Pad (40' only)

The fresh water tank is located forward of the water service center. To help prevent freeze-up, a heating pad is installed under the fresh water tank. The Fresh Tank heat switch on the Systems Control Panel operates heat pad on the fresh water tank. Turn the system on when ambient temperatures approach 44º F. (+/-6º F.) and freezing temperatures occur.

Fresh Tank Heat Operation:

- Turn on the Fresh Tank heat switch on the systems control center when cool or freezing temperatures may occur.
- When the bay temperature reaches 40º F. (+/-6º F.) the snap disc thermostat closes. The Fresh Tank indicator light turns on. The tank heat pad will continue to operate until bay temperature reaches 55˚ F. (+1 - 6˚ F.).

Requirement for Operation:

- House battery disconnect switch must be on.

NOTE:
The fresh tank heat pad consumes approximately 7 Amps when operating. House battery power can be quickly consumed. It is recommended to hook shore power when using fresh tank heat.

Cold Weather Storage

If the motorhome is stored where freezing temperatures may occur, drain the fresh water system. Begin draining the fresh water tank and allowing the water to drain.

CAUTION:
Icemakers, water filters, and water heaters all use the fresh water tank for water. These systems should be drained and stored in accordance with the OEM recommendation for winterization. Consult specific OEM manual for instructions and recommendations.

WINTERIZATION

Water, plumbing and sewer systems require winterization when the motorhome is placed in storage. The recommended method of winterizing the motorhome is using air pressure to remove liquids that may freeze and cause damage to the various systems and appliances. The lines can then be left empty or filled with an FDA approved RV antifreeze.

When plumbing lines are drained, antifreeze is not necessary and the decision to use antifreeze is left to the motorhome operator.

WARNING:
Freeze damage is not covered under warranty.

CAUTION:
It is recommended that a qualified RV service technician familiar with motorhomes, such as an authorized dealer, perform the winterizing procedure.

WARNING:
Turn off the Aqua-Hot and allow it to cool before beginning the winterization procedure. Hot water can result in burn injuries.

NOTE:
Some items (optional and otherwise) such as the Aqua-Hot, icemaker and washer-dryer require individual winterizing procedures. Refer to all OEM manuals for winterization instructions and procedures.

POISON:
Use only non-toxic FDA approved RV antifreeze that is specifically made for potable water systems. Automotive antifreeze, if ingested, can cause blindness, deafness or death.

Using Air Pressure

Access to an air compressor and an adapter to connect the air pressure regulator to the water system is necessary. Air adapters used for winterizing are available at RV supply locations. Air pressure should not exceed 40 PSI. Higher pressure can damage the lines.

1. Empty and flush the holding tanks.
2. Drain the fresh water tank by opening the drain valve located in the water service center behind termination valves.
3. Open hot and cold low-point drain valves. Open a faucet to break vacuum and let water drain.

WARNING:
Ensure the water is not hot when opening the low-point drain valves. Hot water can cause burn injuries.

4. Remove water filter. Empty water from filter bowl then reinstall filter bowl without filter.
5. Close faucet and low point drains.
6. Connect an air hose with pressure regulator to the potable hose. Turn the City Water/Fresh Tank Fill lever to City Water. Set regulator for 40 psi and turn on air.

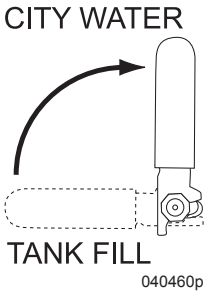

7. Individually open faucets, hot and cold, until only air comes out. Ensure to open water service center faucets.
8. Hold the toilet flush mechanism open until the water has stopped running.
9. Open hot and cold low point drain valves. Allow remaining water to purge from system then close drain valves.
10. Remove water filter bowl and do not re-install.
11. Disconnect the air hose.
12. If applicable winterize the washer-dryer (see washer-dryer “Winterize”). Winterize the Aqua Hot domestic water loop (see Aqua Hot “Winterize” and OEM manual).
13. Use one (1) gallon of FDA approved RV antifreeze to protect various water drain lines in the motorhome. Pour one pint into both the kitchen and bath shower drains. Pour two pints into the bath sink drain. This will protect the P-Traps, with some of the antifreeze going into grey tank to protect the drain valve.
14. Open the valve on the toilet. Pour another three pints into the toilet, letting the antifreeze run into the black tank to protect the drain valve. Use a soft cloth to wipe out the sinks, shower and toilet (after the antifreeze is poured in) to protect the surfaces from stains. Pour the last pint into the washer-dryer drain.

WARNING:
Clean up antifreeze spills immediately to prevent permanent staining.

Using Nontoxic Antifreeze

Approximately eight gallons of FDA approved RV antifreeze will be needed to winterize the motorhome.

POISON:
Use only non-toxic FDA approved RV antifreeze that is specifically made for potable water systems. Automotive antifreeze, if ingested, can cause blindness, deafness or death.

CAUTION:
Ensure the fresh water tank is completely drained as antifreeze will not enter the fresh water tank.

NOTE:
Some items (optional and otherwise) such as the Aqua-Hot, icemaker and washer-dryer may require special instructions. Check all OEM manuals for instructions and recommendations.

1. Empty and flush the holding tanks.
2. Remove water filter bowl. Discard filter cartridge and empty remaining water. Screw filter bowl (without cartridge) onto filter head.
3. Open the fresh water tank valve located behind sewage termination valves.
4. Open hot and cold water low point drains.

WARNING:
Ensure the water is not hot when opening the low-point drain valves. Hot water can cause burn injuries.

5. Turn on the water pump until all the water is cleared out of the water pump, fresh water tank and low point drains then turn the water pump off.
6. If applicable, disconnect the water line to the icemaker.
7. Close hot and cold water low point drain valves.
8. Insert winterization hose into antifreeze solution.

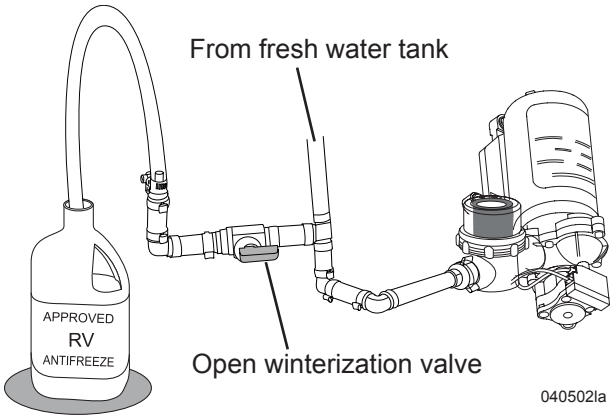

Winterization procedure using non-toxic antifreeze

9. Close the valve located in between the fresh water pump intake and the fresh water tank.
10. Open the Winterization valve and turn on the water pump.
11. Individually open faucets, hot and cold, until a small amount of antifreeze appears. Ensure to open water service center faucets.
12. Hold the toilet flush mechanism open (flush toilet) until a small amount of antifreeze appears.
13. Use a soft cloth to wipe out the sinks, shower and toilet to protect surface from antifreeze stains.
14. Turn water pump off.

CAUTION:
Clean up antifreeze spills immediately to prevent permanent staining.

De-Winterization

1. Close the winterization valve and fresh water tank drain valve
2. Close low point drain valves.
3. Fill fresh water tank with water.
4. Install new water filter (see “Water Filter”).
5. Turn on the water pump and operate all faucets, hot and cold, one at a time, until clear water is present.
6. If applicable connect water line to ice maker. Cycle ice maker several times until clear fresh water is present.

CAUTION:
Discard the first two trays of ice from the icemaker. They may contain contaminants.

NOTE:
Depending on length of storage, the fresh water tank may need to be sanitized.

WATER SERVICE CENTER

1. Water Hose Reel
2. Water Pump and Sani-Con Switches
3. Sewage Tank Flush Connection
4. City Water/Fresh Tank Fill Handle
5. Hose Faucet
6. Exterior Faucet
7. Gravity Fill
8. Tank Monitor Gauge
9. Satellite, Shore Cable & Telephone Inputs
10. Sani-Con Sewage Hose
11. Fresh Tank Drain Valve
12. Black Tank (Solid Waste) Drain Valve
13. Grey Tank (Liquid Waste) Drain Valve
14. Common Termination Drain
15. Sani-Con Hose
16. Aqua-Hot Thermostat
17 Aqua Hot Exchanger
18. Fresh Water (Hot and Cold) Low Point Drain Valves
19. Winterization Valve
20. Water Pump
21. Water Pump Filter
22. Water Tank Shutoff Valve

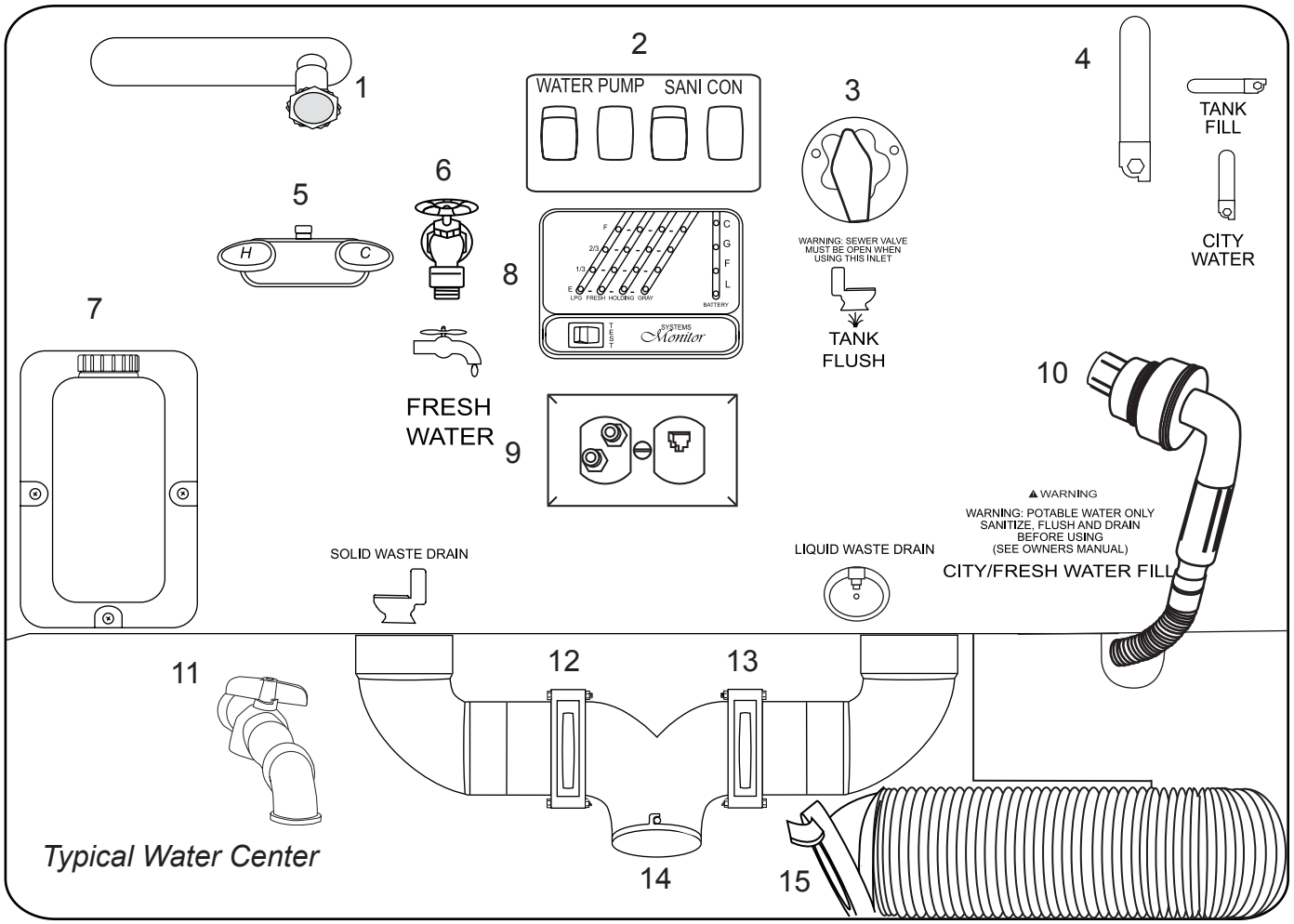

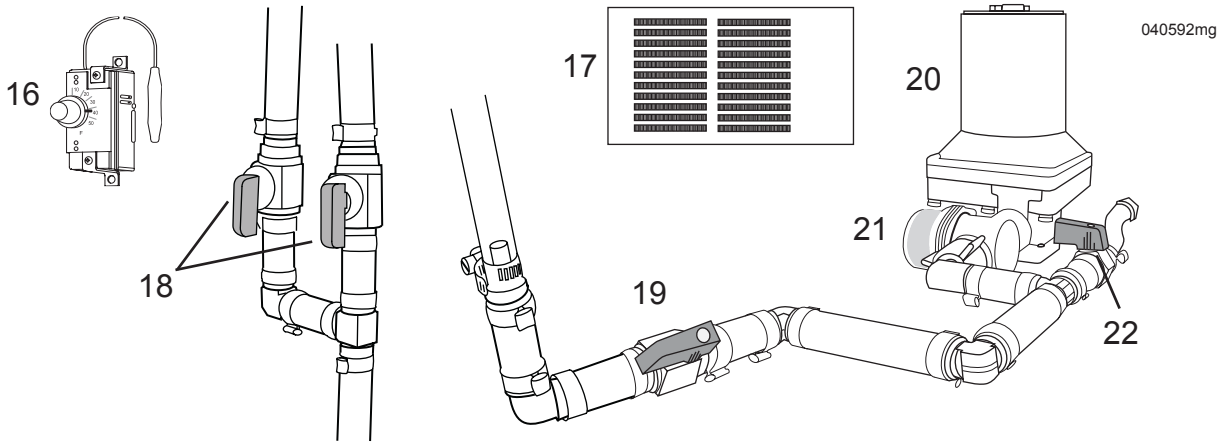

WATER SYSTEM DIAGRAM

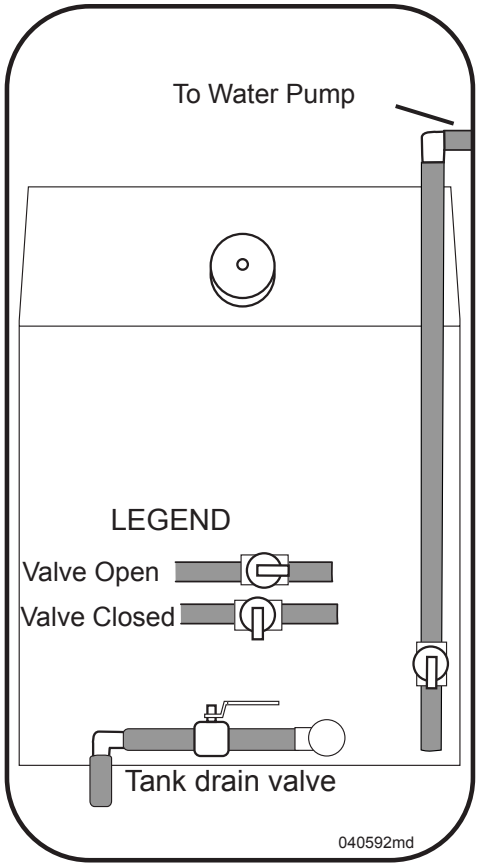

Fresh water tank 40”

NOTE:
Layout of the water service center and location of components will vary with floor plans, options, and changes to the motorhome.

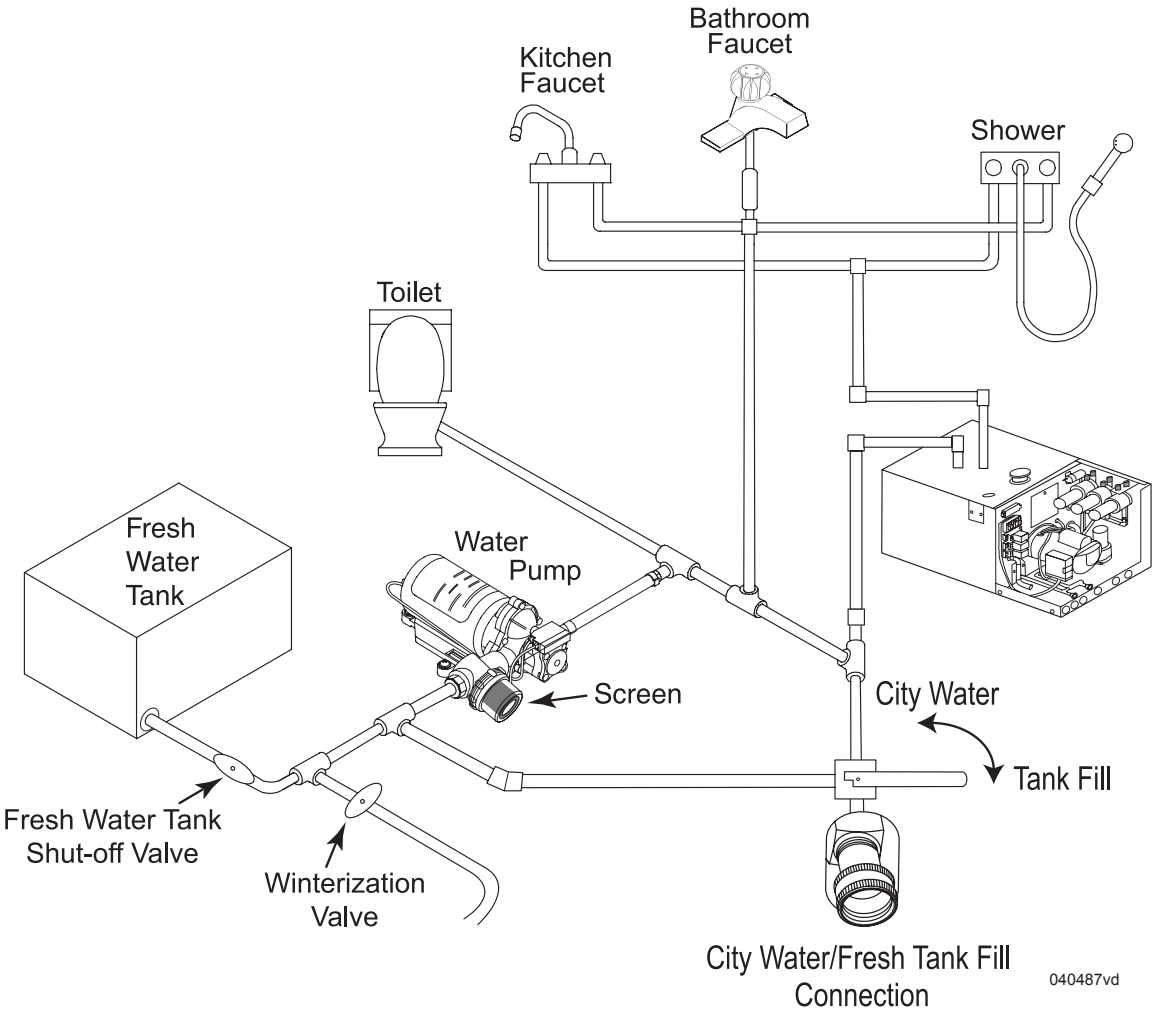

NOTES

Propane Systems

Section 7

PROPANE SYSTEMS 152
PROPANE DETECTOR 153
Testing 153
Alarm 154
Maintenance 154
PROPANE EMERGENCY PROCEDURES 154
PROPANE TANK 155
Measurement 155
Tank Capacity 155
Tank Filling 155
Tank Operation 156
Accessory Hookup 156
PROPANE FUNDAMENTALS 157
PROPANE REGULATOR 158
PROPANE HOSE INSPECTION 159
PROPANE DISTRIBUTION LINES 160
PROPANE CONSUMPTION 160
PROPANE SAFETY TIPS 161

PROPANE SYSTEMS

This section contains safety information and operating instructions of the Liquefied Petroleum Gas (propane) system and related equipment in the motorhome. Some items discussed may not be applicable to all motorhomes. More detailed information with CAUTION or WARNING instructions for various equipment, other than items within this section, can be found in the OEM manuals in the owner's information box.

NOTE:
Some appliance displays and appliance manuals may refer to LP-Gas as a fuel source; however, the actual fuel source used and required for these appliances is propane. The phrase "LP-Gas" is synonymous with not only propane, but butane and propane/butane mixtures. Since propane is the actual fuel required, the term "Propane" will be used throughout this manual except for references to third party appliances (such as the refrigerator) that include the term "LP-Gas" on their displays or other literature.

Propane Overview:

The propane tank contains liquid propane under high pressure. As fuel is used, the liquid vaporizes to a gas and passes through the primary tank valve to a regulator that reduces pressure. Low-pressure gas is then distributed to components through a pipe manifold system.



Component ignition problems are commonly caused by air in the manifold system or incorrect gas pressure. **DO NOT** attempt to adjust the regulator. Adjustments must be made by a dealer or an authorized service personnel with the proper equipment. In higher elevations or extreme cold weather (10° F./-12° C or lower) a shortage of propane may be experienced. If propane is going to be used in higher elevations or cold climates for a long period of time, have authorized service personnel adjust the propane regulator for these conditions.

Propane System Testing:

Have the propane system tested by an authorized dealer or service center at least once a year and before every extended trip. The test will include having the system checked for leaks and the regulator pressure checked and tested for functionality. Although the manufacturer and the dealer test the system carefully for leakage, travel vibrations can loosen fittings.

WARNING:
When storing portable propane tanks that are not connected to a propane system, install an approved plug in the tank outlet hole to prevent leaks. Do not store or transport empty propane tanks, portable tanks, gasoline or other flammable liquids in the interior area of the motorhome. Keep open flame and spark producing materials away from the propane area. Shut off all appliances and the primary propane tank valve when the motorhome is in storage. If this warning is ignored, a fire or explosion could result.

Propane Leaks:

Leaks (identified by the odor of rotten eggs or sulfur) can be easily found by applying a leak detector solution on all connections. **Do not** light a match, have an open flame or use any spark producing equipment or appliance to test for leaks. Leaks can usually be repaired by tightening the fittings. If not, turn off the primary gas valve at the tank. Hand-tighten the primary valve only. Do not use a wrench or pliers as over-tightening may damage valve seats. Have the leak repaired at an authorized dealer or service center.

WARNING:
Propane is highly volatile and extremely explosive. Do not use matches or a flame to test for leaks. Only approved propane leak testing solution for leak detection should be used. Unapproved solutions can damage copper tubing and brass fittings. A liquid dish soap solution of 10 parts water may be used. Shake the solution until bubbles form and then apply the mixed solution to fittings and accessory control valves. All fittings tested should be thoroughly rinsed and dried after testing. Only qualified service personnel should perform maintenance or repairs to the propane system.

NOTE:
It may be illegal to travel in some States and Canadian provinces with the primary propane valve open. Failure to comply with these State and Canadian province requirements may result in fines and/or pose a safety hazard.

PROPANE DETECTOR

The propane detector is required safety equipment in RVs. American National Standards Institute (ANSI) 1192 - ***Fire & Life Safety, 6.4.8, Propane Detectors states:*** *"All recreational vehicles equipped with a propane appliance and electrical system shall be equipped with a propane detector listed as suitable for use in recreational vehicles under the requirements of UL 1484 and installed according to the terms of its listing".*

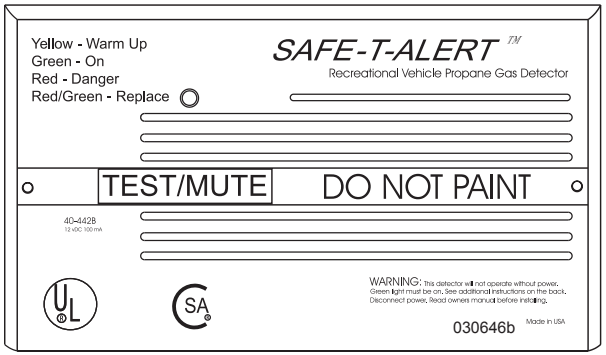

The propane detector is also sensitive to other fumes, such as hair spray, which may contain butane as the propellant. Butane, like propane, is heavier than air and will settle to floor level. Sulfated batteries (rotten egg odor) can also cause the detector to alarm.

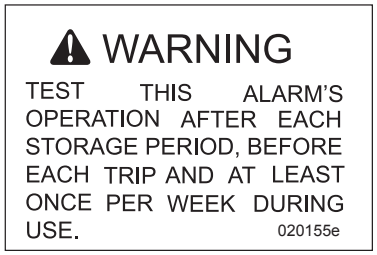

About Propane Leaks:

Propane is heavier than air and generally will settle to the lowest point. Propane leaking from a pipe or fitting will concentrate at the leak and float downwards. Propane escaping from a cooktop burner will concentrate around the burner, cooktop and adjoining counter space and is highly combustible. This concentration of gas can exist for an extended period before the gas reaches the detector's location and sounds an alarm.

NOTE:
The propane detector indicates the presence of propane only at its sensor. Combustible levels of propane may be present in other areas. The detector is intended for detection of propane only.

The propane detector is not designed to detect other types of gas. However, some products may cause the detector to alarm, such as alcohol, liquor, methane, kerosene, gasoline, deodorants, colognes, propellant used in spray cans and cleaning solvents. In some cases, vapors from glue and adhesive used in manufacturing the motorhome can cause the detector to alarm for several months after the date of manufacture. If it is determined that the detector has false alarmed because of the above mentioned nuisance gases, reset the detector and ventilate the motorhome with fresh air. Take precautions to ensure one of these cases has not masked an actual propane alarm condition.

The propane detector draws less current than one instrument panel lamp and will detect propane until the battery is discharged to 7.0 Volts DC. The detector may not operate properly at extreme low voltage. The detector will not operate if power is disconnected or if power is interrupted. The propane detector has a self-check circuit running at all times while the detector is powered. In the event that the circuitry fails, a failure alarm will sound and the LED will flash red and green.

Propane Detector Operation:

When the detector is first powered, the LED will flash yellow for three minutes as the detector is stabilizing. At the end of the startup cycle, the LED will turn green indicating full operation. The detector will sound if an unsafe level of propane is present.

CAUTION:
The detector will not alarm to propane during the three minute startup cycle.

Testing

Press the Test/Mute switch any time during the warm up cycle or while in normal operation. The LED will turn red and an alarm will sound. Release the switch. Do not use any other method to test the detector.

WARNING:
Test the operation of the detector after the motorhome has been in storage, before each trip and at least once per week during use.

Alarm

The red LED will flash and the alarm will sound whenever dangerous levels of propane or natural gas are detected. The detector will continue to alarm until the gas clears or the Test/Mute switch is pressed.

Alarm Procedures:

1. Turn off all propane appliances (stove, water heater, furnace and refrigerator), extinguish all flames and smoking material. Evacuate immediately. Leave doors and windows open.
2. Turn off primary valve on propane tank.
3. Determine and repair the source of the leak. If necessary, contact a qualified professional for service.

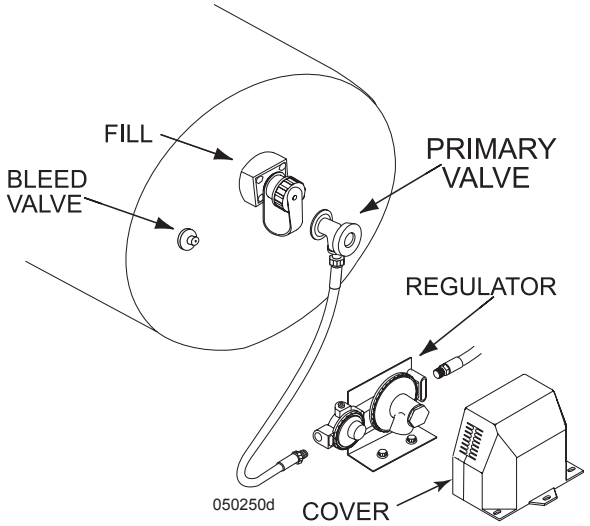

WARNING:
Do not operate any electric switch. This can produce a spark and ignite the gas. Do not re-enter until the problem is corrected.

POTENTIAL SOURCES OF PROPANE LEAKS WHEN OPERATING THE MOTORHOME	
◆Cooktop Burners ◆Oven ◆Refrigerator ◆Water Heater	◆Defective Propane Connection ◆Defective Regulator ◆Portable Propane Powered Appliances/Accessories ◆Furnace

Alarm Mute:

Press the Test/Mute switch when the detector is in alarm.

1. The red LED will continue to flash and the alarm will beep every 30 seconds until the gas level has dropped to a safe level.
2. The LED will flash green until the end of the Mute cycle.
3. If dangerous gas levels return before the end of the Mute cycle, the alarm will beep four times and return to phase 1.
4. After two minutes the detector will return to normal operation (solid green) or re-sound the alarm if dangerous levels of gas remain in the area.

Fault Alarm:

Should the microprocessor sense a fault in the detector, the alarm will sound twice every 15 seconds. The LED will alternately flash red to green and the Test/Mute switch will not respond to any command. The detector must be repaired or replaced.

Maintenance

1. Vacuum the detector cover weekly (more frequently in dusty locations) using the soft brush attachment of a vacuum.
2. Do not spray cleaning agents or waxes directly on the front panel. This can damage the sensor, cause an alarm or cause a detector malfunction.

PROPANE EMERGENCY PROCEDURES

If a propane smell is detected (a rotten egg or sulfur smell) at any time, perform the following steps immediately:

- Shut off propane appliances.
- Manually turn off the primary shut-off valve at the propane tank.
- **Do not** operate any electric switch. This can produce a spark and ignite the gas.
- Open windows and doors.
- Evacuate the motorhome. Stay clear of the surrounding area.
- Keep all ignition sources out of the area.
- Contact a qualified service technician to find the source and repair the propane leak.

WARNING:
A fire or explosion from ignited propane or propane fumes can cause serious injury or death.

PROPANE TANK
Measurement

The motorhome is equipped with a monitor panel to aid in managing the propane tank. Press the Test switch to monitor the tank level. Colored lights represent the tank levels.

Propane and Fresh Tank	Fresh Water and Holding Tanks
Red = Empty	Green = Empty
Red = 1/3 Full	Yellow = 1/3 Full
Yellow = 2/3 Full	Red = 2/3 Full
Green = Full	Red = Full

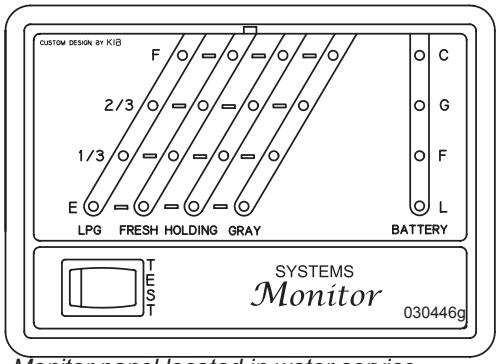

Monitor panel located in water service center

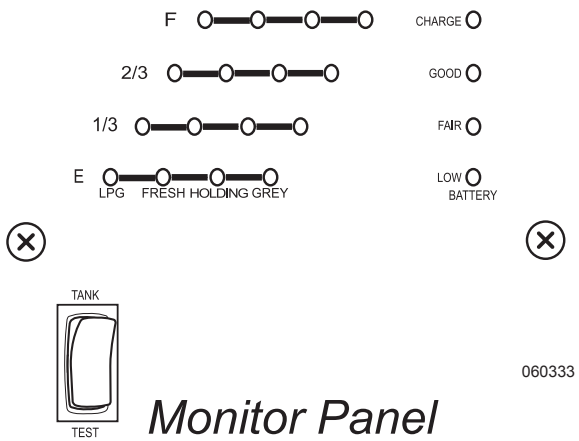

Monitor Panel Located in Hallway Area

Tank Capacity

NOTE:
This chart reflects product specifications available at the time of printing.

NOTE:
Propane tank capacity is estimated based upon calculations provided by the tank manufacturer and represents approximate capacity. The actual "usable capacity" may be greater or less than the estimated capacity. Actual full liquid capacity is 80% of full tank capacity.

Propane Tank Capacity
*39 Gallons
**Actual filled propane capacity is 80% of listing due to safety shut-off required on tank.*

Tank Filling

Woodall's Campground and Trailer Guide, and other similar publications, list refueling stations. Many travel parks sell propane. Before filling the propane tank, shut off pilot lights, appliances and igniters to prevent a fire or explosion. Have a trained service person fill the propane tank.

WARNING:
Before entering a refueling station, turn off all pilot lights and propane operated appliances. Most propane appliances used in motorhomes are vented to the outside. Fuel vapors can enter an appliance vent on a motorhome that is parked close to a gasoline pump, resulting in an explosion or fire.

⚠ DANGER

ALL PILOT LIGHTS, APPLIANCES AND THEIR IGNITORS (SEE OPERATING INSTRUCTIONS) SHALL BE TURNED OFF BEFORE REFUELING OF MOTOR FUEL TANKS AND/OR PROPANE CONTAINERS.
FAILURE TO COMPLY COULD RESULT IN DEATH OR SERIOUS INJURY.

⚠ WARNING

DO NOT FILL PROPANE CONTAINER(S) TO MORE THAN 80 PERCENT OF CAPACITY.
FAILURE TO COMPLY COULD RESULT IN A FIRE OR PERSONAL INJURY.

⚠ CAUTION

THIS PROPANE PIPING SYSTEM IS DESIGNED FOR USE WITH PROPANE ONLY. DO NOT CONNECT NATURAL GAS TO THIS SYSTEM.
Securely cap inlet when not connected for use. After turning on propane, except after normal cylinder replacement, test propane piping and connections to appliances for leakage with soapy water or bubble solution. Do not use products that contain ammonia or chlorine.

020155i DD-37

WARNING:
Extinguish all sources of heat, sparks, flames and smoking materials within a 50' radius during the fueling process.

The tank must be filled to the proper level to allow for expansion. An over-filled tank may cause the tank safety valve to release pressure emitting a strong rotten egg odor near the tank and/or a hissing noise.

WARNING:
Small amounts of propane will escape and evaporate during the fueling process. Protect bare skin. Instant freezing will occur if exposed to propane.

Propane exists in both liquid and vapor form within the tank. A full tank is approximately 80% liquid. The pressure inside the tank varies with the temperature of the liquid. All tanks are required to have a safety pressure relief device to release excess pressure. Actual full liquid capacity is approximately 80% of full tank capacity. The monitor panel is adjusted for this and will indicate full at this point.

NOTE:
If the tank is new and being filled for the first time, inform the service technician to purge any air from the tank prior to filling.

Tank Operation

- Manually open the primary shut-off valve located on the propane tank when operating appliances.
- Turn off the primary shut-off valve on the propane tank when the tank is being filled, during travel, in between trips and while in storage.
- Hand-tighten the primary valve only. Do not use a wrench or pliers. This will over-tighten the valve. The primary valve is designed to be closed by hand. Over-tightening may permanently damage the valve seat.

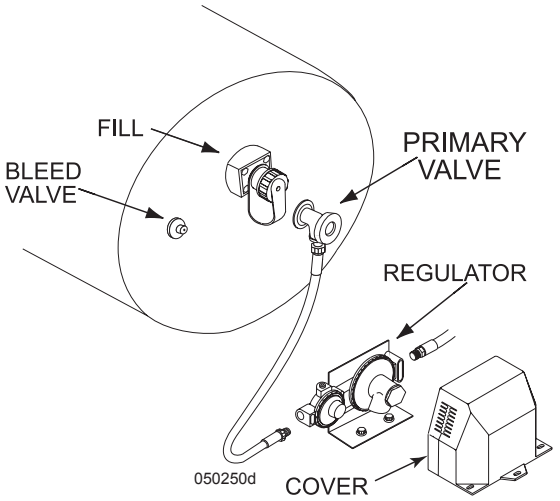

CAUTION:
In some States and Canadian provinces, it may be illegal to drive the motorhome while primary valve on the propane tank is open.

Accessory Hookup

An auxiliary remote propane hookup is for external propane accessories and to be used for external components only. For safety, only approved propane quick disconnect fittings and flexible hose should connect external accessories to the remote hookup. A propane quick disconnect fitting should be installed by a qualified agency as defined in the National Fire Protection Association NFPA (Fire) 54-02 code.

The accessory hookup is located in a curbside compartment.

INSPECTION:
Check for leaks on all connections each time the remote propane is used. If a leak is detected, turn off the primary shut-off valve on the propane tank. Contact a qualified service center for the necessary repairs.

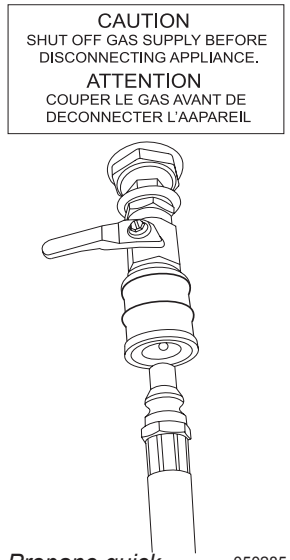

Propane quick disconnect located in cubside bay

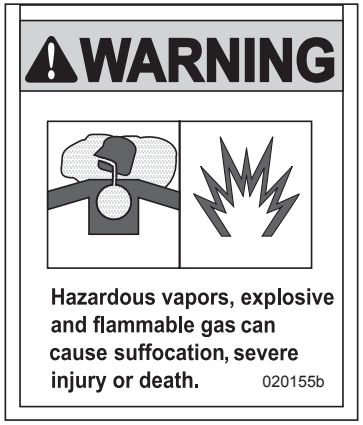

QUICK DISCONNECT FITTING

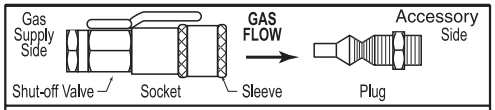

NOTE:
COUPLING TO BE INSTALLED BY A QUALIFIED AGENCY AS DEFINED IN THE NATIONAL FUEL GAS CODE (NFPA 54)

INSTALLATION INSTRUCTIONS

1) INSTALL SOCKET WITH SHUT-OFF V ALVE ON THE GAS SUPPLY SIDE
2) INSTALL PLUG ON THE ACCESSORY SIDE
3) LEAK TEST USING SOAPY WATER SOLUTION

OPERATING INSTRUCTIONS

TO CONNECT:

1) CLOSE SHUT-OFF VALVE
2) PULL SOCKET SLEEVE BACK
3) INSERT PLUG; RELEASE SLEEVE
4) PUSH PLUG INTO SOCKET UNTIL SLEEVE SNAPS FORWARD
5) OPEN SHUT-OFF
6) LEAK TEST USING SOAPY WATER SOLUTION

TO DISCONNECT:

1) CLOSE SHUT-OFF VALVE
2) TO RELEASE PLUG, PULL SLEEVE BACK AWAY FROM PLUG; PULL OUT PLUG
3) INSERT PLUG; RELEASE SLEEVE
4) LEAK TEST USING SOAPY WATER SOLUTION

020155b

PROPANE FUNDAMENTALS

#Capacity	Gallon Capacity	BTU Capacity
5	1.18	107,909
10	2.36	215,807
11	2.59	237,387
20	4.72	431,613
30	7.08	647,420
40	9.43	863,226

The above capacities allow for 20% vapor space on each cylinder. Data taken from the National Fire Prevention Association (NFPA). Pamphlet #58-1998.

CONVERSIONS

Gallons to Liters (1 Gallon = 3.785 Liters)
Fahrenheit to Celsius ($F^o - 32 \div 1.8 = C^o$)
11 in Water Column = 6 1/4 ozs. per sq. in. pressure.
27.7 in. Water Column = 1 lb. per sq. in. pressure.

PROPANE STATISTICS	
Pounds Per Gallon	4.24
Specific Gravity of Gas	1.50
Specific Gravity of Liquid	.504
Cubic Feet Gas Per Gallon of Liquid	36.38
Cubic Feet Gas Per Pound	8.66
BTUs Per Gallon	91,502
BTUs Per Gallon	21,548
Dew Point in Degrees Fahrenheit	-44˚ F
Vapor Pressure at 0˚ F	31
Vapor Pressure at 70˚ F	127
Vapor Pressure at 100˚ F	196
Vapor Pressure at 110˚ F	230
Flash Point	842˚ F

BASIC FACTS ABOUT PROPANE

- Propane detectors are a federal requirement on all propane equipped recreation vehicles.
- Propane is a by-product produced by refining oil.
- Oil is added to propane after the refining process.
- Each liquid gallon of propane produces 91,502 BTUs (British Thermal Units).
- Temperature affects pressure of propane. Internal tank pressure can exceed 200 psi.
- Tanks or valves contain pressure relief valves. The relief valve opens at 125% above tank rating.
- Propane stops vaporizing at -44˚ F.
- Standard propane operating pressure is 11" of Water Column or approximately 6 ¼ ounces per square inch.
- An inch of Water Column is a measurement of applied pressure to one side of a U-Tube ½ filled with water at sea level. The amount of pressure required to raise the water level 11", represents 11" of Water Column.

NOTE:
The propane fundamentals information is not a complete guide for the use of propane tanks or appliances. In cold climates keep propane level above 50% to keep vaporization of propane at the highest level.

PROPANE REGULATOR

Propane is compressed into liquid form in the tank. Only the vapor is used during combustion by an appliance. As vapor is removed from the tank, the remaining liquid will vaporize to maintain pressure that is removed during consumption. This process will continue until there is no liquid remaining in the tank.

Temperature affects the vaporizing action of the liquid. If temperature of the liquid is - 44º F, the liquid remains stable with tank pressure, about 0 psi. If liquid temperature is 100º F, the liquid quickly vaporizes with tank pressure, about 200 psi. Vapor pressure must remain relatively consistent, regardless of temperature, for the appliance heat output to remain stable. Vapor pressure regulation is performed by the regulator.

The two-stage regulator reduces vapor pressure so that it is safe for use. The first stage of the regulator reduces tank pressure to a range of 10 to 13 psig (pounds per square inch gauge). The second stage further reduces pressure to a working pressure of 0.4 psig (11 Inches of Water Column or about 6¼ ounces psi.). A vent is installed to allow the internal diaphragm to move with atmospheric pressure change. It is important to keep the vent clean and clear of obstruction or corrosion. If the vent becomes clogged, pressure from the propane tank may cause erratic pressure regulation. If there is any corrosion, contact a qualified propane service technician. The regulator is mounted so that the vent faces downward. If the vent becomes clogged, clean it with a toothbrush.

Under normal atmospheric conditions a propane regulator will not freeze, nor will the propane. Vapor passing through the regulator will expand and cool, condensing moisture in the propane. The moisture will freeze, build up and block the vent. The possibility of freeze up is greatly reduced with the two-stage regulator.

To Prevent Freeze Up:

- Ensure the propane tank is totally free of moisture prior to filling.
- Ensure the tank is not over-filled.
- Keep the valve closed when the tank is empty.

If A Freeze Up Occurs:

- Have an propane distributor purge the tank.
- Have the propane distributor inject methyl alcohol in the tank.

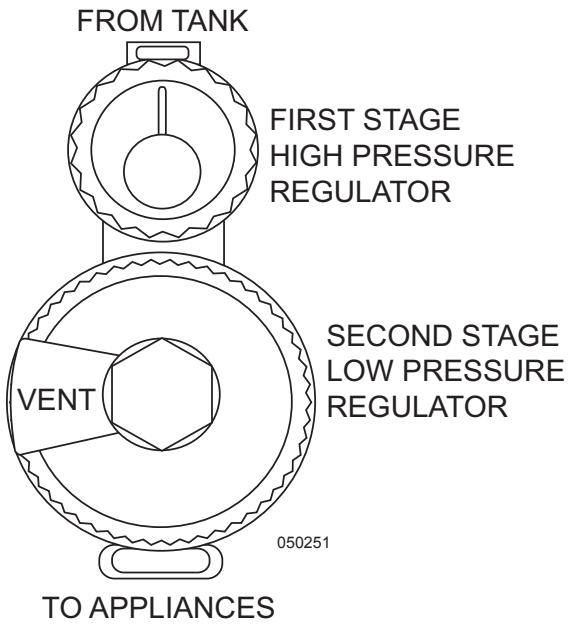

Damage to the regulator can occur when the tank is overfilled. The regulator is designed to work with vapor only. This is why the tank is filled to only 80% of its liquid capacity. The other 20% allows for vaporization of the liquid. The primary vapor valve is located in the vapor section of the tank. In an overfilled tank, liquefied petroleum can fill the regulator. Vaporizing liquid can freeze the diaphragm. High tank pressure on a frozen diaphragm can cause a rupture and result in erratic pressure regulation. This is why it is important to have the propane pressure checked for proper pressure and accurate regulation during appliance operation. Erratic pressure regulation dramatically affects refrigerator operation on propane.

<u>WARNING:</u>
Do not attempt to adjust the regulator. Adjustments require special equipment. Failure to follow these instructions may result in a fire or explosion, and can cause severe personal injury or death. Do not operate propane appliances until the propane pressure is checked and a leak down test is performed!

Manometers:

The manometer is the best way to accurately determine propane pressure. There are two different styles of manometers: Gauge and U-tube. Propane pressure is measured in Inches of Water Column. This is the amount of pressure applied to one side of a U-shaped tube half filled with water. The amount of pressure needed to raise the column of water 11" represents 11 Inches of Water Column.

TIP:

Attach the manometer gauge to the accessory hookup line to avoid loosening any interior propane line connections.

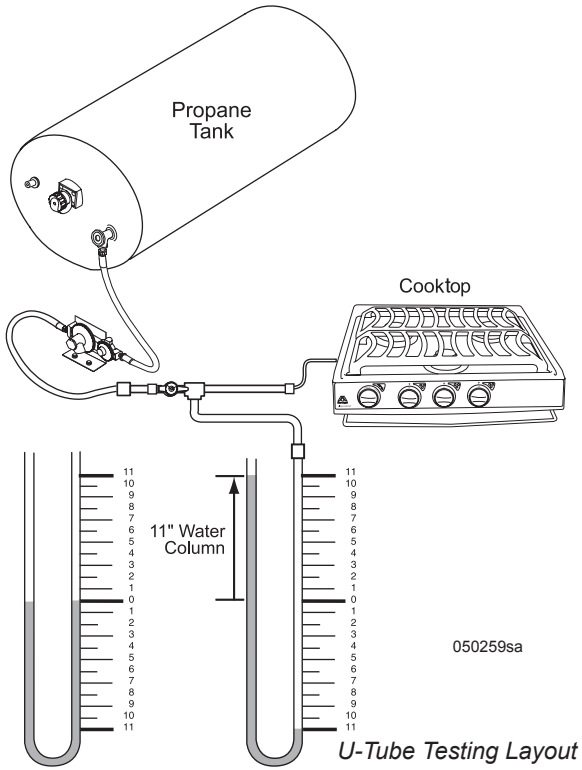

U-Tube Testing Layout

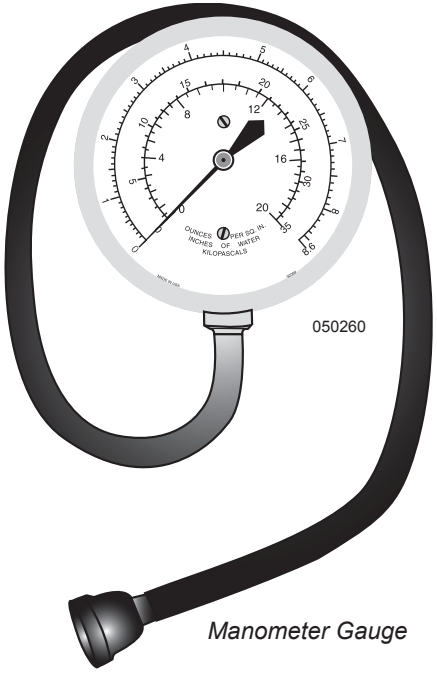

Manometer Gauge

PROPANE HOSE INSPECTION

The hose manufacturer suggests that a flexible propane supply hose undergo regular inspection. As a guideline, it is recommended that all flexible propane lines connecting the slide-out, appliances and tanks be inspected in the spring and fall of each year by a qualified RV technician.

Inspection tips:

Hose strength is controlled by the plies of reinforcement. Damage in this area cannot be tolerated. It is important that if a damaged propane hose is found, the source of the damage be determined and corrected prior to the replacement. Small cuts, nicks, or gouges that do not go completely through the cover are not cause for replacement of the hose. Inspection should be performed when the hose is not under pressure.

NOTE:

Pricking of the cover in the manufacture of this type of hose is common and necessary for satisfactory hose performance. Consequently, the uniformly pricked cover should not be viewed with alarm.

Cause for hose replacement:

- Damage to the textile reinforcement or wire braid; wire braid reinforced hose, which has been kinked or flattened so as to permanently deform the wire braid in the un-pressurized state.
- Blistering or loose outer cover.
- Slippage; evidenced by the misalignment of the hose and coupling and/or the scored or exposed area where slippage has occurred.

CAUTION:

Only a qualified service technician should perform repairs or component replacement.

Additional suggested maintenance:

After performing extensive testing, the manufacturer of the flexible propane supply hoses has determined that the hoses be replaced every ten (10) years as failure rate may increase after this period of time. The motorhome manufacturer recommends following this guideline to assure continued safety and dependable use.

PROPANE DISTRIBUTION LINES

A primary manifold black steel pipe running throughout the motorhome distributes propane to secondary lines. All secondary lines leading to propane appliances are made of copper tubing with flared fittings. It is recommended that propane distribution work be performed by an authorized dealer or an authorized service technician.

INSPECTION:
Inspect the rubber flexible lines twice a year for abrasions, tears, kinks or other signs of damage.

If a propane leak is suspected, have the system inspected and repaired by a qualified service technician as soon as possible.

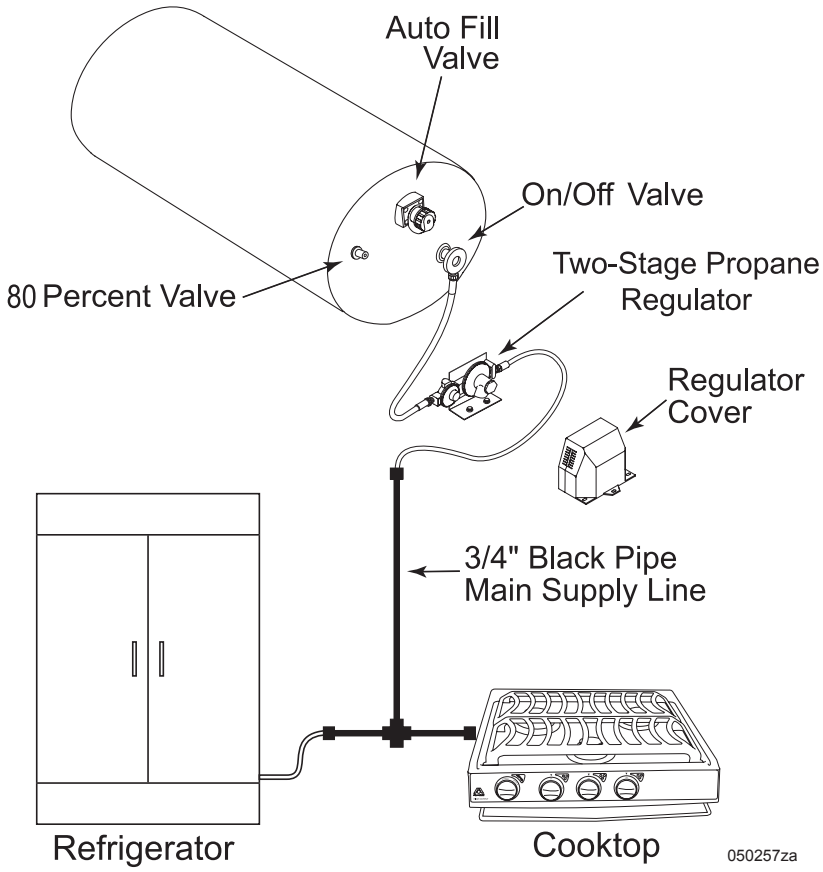

PROPANE CONSUMPTION

Each gallon of propane produces 91,502 BTUs of heat. One 27 gallon tank produces two million BTU's. Total consumption depends on the rate of usage by each appliance and the operating time. The water heater and furnace typically uses the most propane.

Determine Fuel Consumption:
To determine approximately how many hours an appliance will operate on one gallon of propane, use the following formula:

- Propane appliances are rated in Input BTU (British Thermal Units). The rating is usually stamped or printed on a tag affixed to the appliance. For example: the Input rating of the appliance is 10,000 BTUs.
- One gallon of propane produces 91,502 BTUs.
- Divide the amount of BTUs of one gallon of propane (91,502) by the rating on the appliance in this example 10,000. Net continuous operation time for one gallon of propane for this appliance would be approximately 9.2 hours.

The above formula can be useful when trying to determine the approximate length of time a tank of propane will last. Generally, propane appliances do not continuously operate. An example would be the typical cycling of the refrigerator.

Determining How Long a Tank of Propane Will Last:

- Combine the BTU input totals of all appliances and the approximate length of time these appliances operate per day.
- Multiply the number of liquid gallons in the propane tank by 91,502.
- Divide the total of BTUs of the propane tank by the total number of BTUs the appliances consume, equals the approximate number of hours of operation before refueling.

Typical Appliance BTU Ratings

Cooktop
Large - 10,000 BTU
Small - 7,000 BTU

Refrigerator (Norcold)
4-door - 2,200 BTU

PROPANE SAFETY TIPS

Propane is one of the safest and most reliable fuels available on the market when handled properly. Propane, however, does have a great explosive potential if handled improperly. Danger is minimized by becoming familiar with and following a few safety precautions and by learning how to properly operate propane appliances. Use of propane requires the responsibility to enforce extra safety measures.

The motorhome is equipped with many propane operated appliances because it is a convenient and efficient source of fuel. Propane appliances must be operated and maintained in accordance with the product manufacturer's instructions.

The National Propane Gas Association (NPGA) has a special service program offered called GAS® (Gas Appliance System) Check. The GAS® Check program is aimed at educating users about the convenience of propane with safety and peace of mind. For information on the NPGA Gas® Check program, call 1-202-466-7200 or visit www.npga.org.

Maintenance and Safety Tips for the Propane Refrigerator and Furnace:

- Have the refrigerator and furnace systems inspected annually by an authorized service center.
- Have the venting system checked for blockage before using the refrigerator or furnace for the first time each season. Insects may have built nests that will obstruct flow.
- At the first indication of incomplete combustion (yellow flame instead of a blue flame or soot is present) contact a service technician. Improper combustion can cause carbon monoxide buildup, which is potentially fatal.

Maintenance and Safety Tips for the Propane Cooktop:

- Burner flame should be a blue color, which indicates complete combustion. If not, have the cooktop serviced by a qualified technician.
- Do not cover the oven bottom with foil. Air circulation can be restricted.
- Do not use propane cooktop or ovens for heating purposes.
- Ensure children understand never to turn or play with the knobs of the cooktop.

Maintenance and Safety Tips for the Propane Water Heater:

- Have the water heater venting system inspected annually or before first use of the season.
- Keep flammable substances away from the water heater. Do not store items close to it as this may block the airflow the water heater needs to operate completely.
- At the first indication of incomplete combustion (yellow flame instead of a blue flame or soot is present) call a service technician immediately. Improper combustion can cause carbon monoxide buildup, which is potentially fatal.

NOTES

House Electrical

Section 8

HOUSE ELECTRICAL - INTRODUCTION 164
BATTERY DISCONNECT - HOUSE 165
SHORE POWER HOOK-UP 165
Power Cord Reel 166
TRANSFER SWITCH 167
GENERATOR - 120 VOLT AC 168
Pre-Start Checks.....169
Starting the Generator 169
Stopping the Generator.....170
Powering the Equipment.....170
Generator Fuel.....170
Resetting the Circuit Breaker.....170
Generator Exercise 171
INVERTER 171
Providing AC Power with Inverter.....171
Battery Charging with Inverter 172
Factory Default Settings 173
Battery Temperature Sensor 173
Auto Generator Start (Optional) 173
AGS Menu: 173
AGS Programming 174
ATS Programming.....174
Disabling AGS/ATS.....174
Power Assist.....174
LOAD CENTER - 120/240 VOLT AC 175
Power Control System 175
Circuit Breakers.....176
GFCI Breakers & Outlets 176
DISTRIBUTION PANEL - HOUSE 12 VOLT DC...177
FUSES & CIRCUIT BREAKERS - 12 VOLT DC...178
BATTERIES - HOUSE 179
Battery Maintenance 179
Testing the Battery 182
Charge Time & Consumption Rate.....183
SOLAR PANEL (OPTIONAL).....184
Charge Controller 184
Monitor.....185
Solar Panel Care 185
LIGHTS.....185
Interior Halogen.....185
Incandescent Light.....186
Map Light 186
TYPICAL ELECTRICAL LAYOUT 187

HOUSE ELECTRICAL - INTRODUCTION

This section contains guidelines, procedures and information on the electrical system and operation of various components. Refer to the OEM manuals included in the Owner's Information File box for respective, in-depth, individual component operating instructions.

General Overview:

The motorhome can utilize various sources of electrical power: shore power connection, generator, inverter, chassis batteries and house batteries. All of these electrical power sources, while independent of each other, can be combined in a variety of ways to provide a highly efficient electrical operating system. Two types of electrical systems are used: 120/240 Volt AC and 12 Volt DC.

The motorhome 120/240 Volt AC system can be operated from three different power sources: shore power, on-board generator or the inverter. Shore power is the most efficient and should be used whenever possible. The generator can be used when shore power is unavailable. The inverter supplies silent AC power by using the house batteries of the motorhome, sending AC power to selected appliances and outlets. However, inverter AC power output is limited and should be used sparingly to conserve house battery power. Two different sources supply the main AC circuit breaker panel with power: the 50 Amp shore power cord or the on-board generator. The transfer switch automatically selects between shore power and generator power.

WARNING:
The electrical system is engineered and tested for safety. Circuit breakers and fuses protect the electrical circuits from overloading. When planning modifications or additions to the electrical system, ensure safety of the electrical system. Please note that any modifications may void the warranty.

WARNING:
Water is electrically conductive. DO NOT use any electrically powered item or outlet that may be exposed to a water source. Such use can result in a serious shock causing injury or death.

12 Volt DC System:

The motorhome has two 12 Volt DC systems: chassis and house. These two systems, for the most part, are separate from one another. The house system does not operate engine functions; the engine system does not operate house functions. However, within the two systems there are some inner connections. For example: While the motorhome is driven, the alternator on the engine will supply charge voltage to the house batteries. Conversely, while the motorhome is plugged into shore power, or the generator is running, the chassis batteries are being charged. Each system will supply 12 Volt DC power to the 12 Volt DC distribution panels.

Chassis and House System:

The chassis and house systems have their own sets of batteries. The chassis batteries supply 12 Volt DC power to the front electrical panel, front distribution box, and rear distribution box. These panels contain mostly engine system circuits and wiring such as headlights, taillights, dashboard functions, gauges, etc. The house batteries supply 12 Volt DC power to the distribution panel located above the driver. This panel contains fuses for the house, interior lighting and appliances. Become familiar with these panels and the items they operate.

Maintenance:

It is important to keep the 12 Volt DC systems in good working order as many of these systems use electronics. These systems, with their incorporated electronics, are voltage sensitive. Some items can be damaged if the DC voltage is not maintained within the designed specifications.

Why Batteries are Important:

A majority of the lighting and appliances are designed to operate from 12 Volt DC (direct current) power. This is why the batteries play such an important role in the function of the motorhome. There are exceptions with appliances such as the microwave or television; however, indirectly they still operate from 12 Volt DC power, as they can be operated from the inverter. The chassis functions (engine, transmission, dash air, etc.) are also 12 Volt DC.

Shore Power:

The motorhome is equipped with a shore power cord to connect the motorhome to outside electrical services. Shore power service is the most efficient source of electrical power. The plug end of the power cord is 50 Amp 240 Volt AC. When this type of power source is not available, electrical adapters will be required to allow a proper and safe connection to the electrical service supply.

NOTE:
When 50 Amp shore service is not available, care will have to be used when operating the appliances and using the outlets to avoid overloading the shore power service.

Generator:

The generator can be selected for use when shore power is unavailable. The maximum amount of generator output power, measured in watts, is calculated at an elevation of 500 ft. above sea level. This figure decreases slightly at higher altitude. Ambient temperature also effects total maximum output. The amount of AC electrical load applied to the generator determines fuel consumption.

Inverter:

The inverter is an auxiliary 120 Volt AC power source that inverts 12 Volt DC house battery power to 120 Volts AC. This device has limited AC power output, measured in watts, and operates only selected appliances and outlets. The inverter also converts 120 Volts AC power, supplied from either shore power or the generator, to 12 Volts DC power to recharge the batteries. When dry camping, the inverter may be used to supply power to selected outlets.

BATTERY DISCONNECT - HOUSE

The main house battery disconnect switch turns the house battery power supply on or off by disconnecting 12 Volt DC power to the following items: the inverter, house fuse panel above the driver and house fuses in the roadside front electrical panel. Turn the house battery disconnect switch off when the motorhome is going to be stored for more than 48 hours or before performing electrical maintenance. If possible, leave the motorhome plugged into an outside electrical service with the house battery disconnect switch on to help prevent the possibility of dead batteries. Use of the house battery disconnect switch will not turn off all DC electrical items or other parasitic loads present on the house battery.

The house battery disconnect is located:

- 36’ & 43’ = Curbside rear compartment on rear electrical panel.
- 40’ = Roadside house battery compartment.

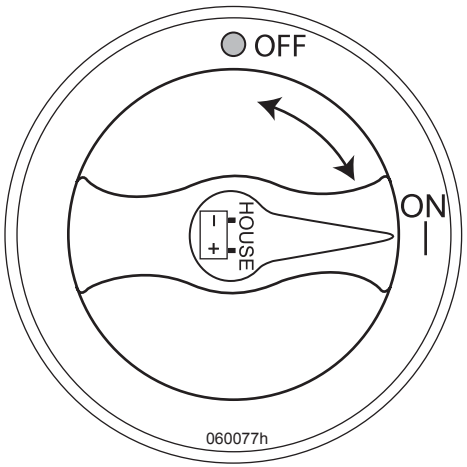

BATTERY CUT-OFF SWITCH

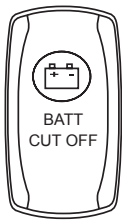

The battery cut-off switch is located inside and next to the entry door. This switch controls the 12 Volt DC power to the house fuse panels. When the switch is activated, power is supplied to all the interior DC lighting and DC operated appliances. Some appliances require both DC and AC power to operate, such as the roof air conditioner. This switch is helpful when dry camping to conserve house battery power. Refrigerator and inverter operation are unaffected by the operation of this switch. When turned off, this switch will not stop all parasitic loads and therefore is not a substitute for the house battery disconnect switch.

CAUTION:
Avoid flash damage to electrical contacts. Turn off the interior lighting before activating the battery cut-off switch.

SHORE POWER HOOK-UP

The power requirement for the motorhome is 50 Amp 120/240 Volt AC single phase. The motorhome can be operated from 30 Amp 120 Volt AC but with limited capacity. If 50 Amp shore power service is available, connect the supplied shore power cord. If less than 50 Amp service is available, electrical adapters are required and power consumption must be reduced to avoid tripping the shore power breaker. The power cord is stored in the rear roadside compartment.

CAUTION:
Avoid flash damage to the electrical system contacts. Before hooking up to shore power, starting the generator or using the inverter turn off all appliances.

WARNING:
Keep fingers away from metal contacts of the shore plug end. DO NOT stand in water when making electrical connections. Serious electrical shock and personal injury can occur. To avoid the risk of an electrical shock, turn the circuit breaker off for the power supply outlet before making the shore power connection.

CAUTION:
Do not remove cover from shore power supply to troubleshoot electricity to the motorhome. Serious personal injury or death may occur. If there is no power to the motorhome, inform the park manager. It is the park manager's responsibility to fix problems with the park's shore hook-up.

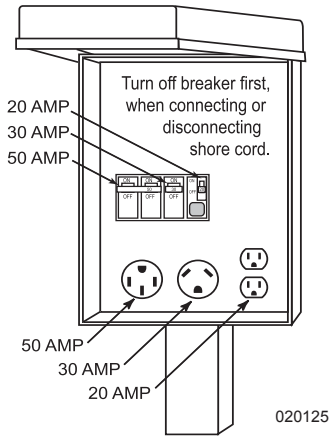

Power Cord Reel

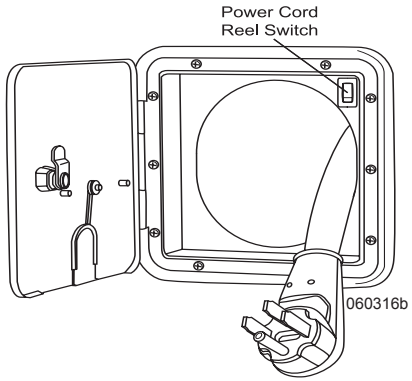

The Power Cord reel is a 12 Volt DC powered assembly that mechanically coils and stows the shore cord. The power cord reel is located in a rear roadside hatch. The power cord switch operates a 12 Volt DC motor that retracts the cable.

- Turn all appliances off.
- Extend a sufficient amount of cable to reach the power supply.
- If 50 Amp service is available, no adapters are required. If shore power service is less than 50 amps, install the proper adapter on the shore plug to ensure a safe connection.
- Always turn off the shore power breaker before connecting or disconnecting the shore cord. This will prevent an accidental shock or flashing of electrical contacts.

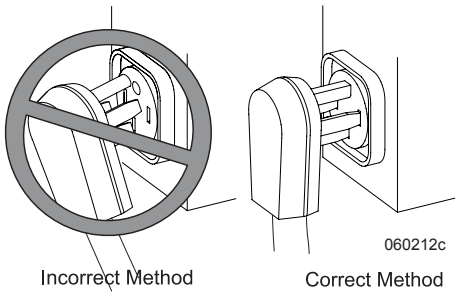

- Align plug terminals with socket terminals. Carefully (without touching electrical contacts) push plug completely into socket until the plug is firmly seated. The cord should be slightly slack.

When Hooked to 50 Amps:
After verifying proper voltage, wait approximately one minute for the inverter to stabilize charging of the batteries before starting air conditioners or other large AC loads.

When Hooked to 30 Amps:
Allow the inverter sufficient time to stablize battery charging before operating electric appliances. Operate appliances and outlets in sequence rather than all at the same time.

Disconnecting the Shore Cord:
- Turn off all AC appliances.
- Turn off the shore power breaker. This will prevent accidental shock and flashing of electrical contacts when disconnecting.
- Straighten, clean and store the cord.
- Assist the cord when retracting. Stop retracting the cord when it is 6" from the opening. Retracting the cord too far will make it difficult to retrieve the cord.

Maintenance:
Kinks may form in the shore power cable when only a short section is frequently used. Routinely extend the cable full distance and straighten the power cable on the ground to relieve kinking.

Power Supply:

Amperage supplies vary greatly depending on the amount of available current.

- The continuous amount of current through a breaker or fuse is only 80% of its rated capacity.
- 50 Amp 240 Volt AC shore power service consists of two power supply conductors, a neutral and a safety ground. The 50 Amp breaker simultaneously limits each power supply conductor to no more than a short-term maximum of 50 Amps for each conductor. The 50 Amp 240 Volt service actually provides 80 continuous amps.
- Use care when hooked to anything less than 50 Amp shore service. Shore power service less than 50 Amps consists of one power supply conductor, a neutral and a safety ground; 30 Amp shore service is limited to 24 continuous amps. 20 Amp shore service is limited to 16 continuous amps.

Electrical Adapters:

Different types of electrical adapters are designed to suit a variety of different needs. Only UL approved adapters should be used. The most common adapter is a 50-30 Amp adapter.

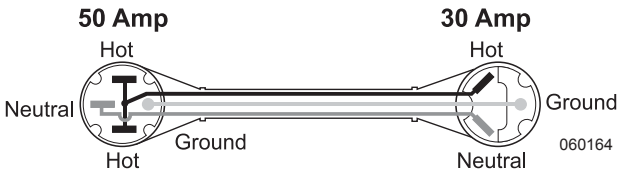

Typical 50 - 30 Amp Adapter

This type of connector adapts the 50 Amp shore cord to a 30 Amp shore power outlet. Always install the adapter to the cord prior to making the connection to the outlet.

Another common adapter is a 30 to 20 Amp adapter. This type of connector adapts the 30 Amp shore cord to a 20 Amp shore power outlet.

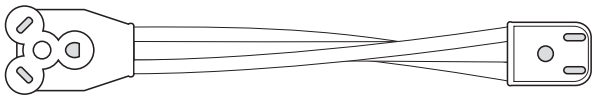

Typical 30 - 20 Amp Adapter: Adapts 30 Amp Shore Cord to 20 Amp Shore Power Outlet

CAUTION:

If shore power service is limited to 15 or 20 amps, use of light duty extension cords and electrical adapters will create a voltage loss through the cord and at each electrical connection. Line voltage loss and the resistance at each electrical connection can be a hazardous combination. Damage to sensitive electronic equipment may result!

WARNING:

Avoid the risk of electrical shock or component damage by disconnecting from shore power during electrical storm activity. Use the inverter or start the generator if AC power is needed.

NOTE:

Three types of shore power outlets most commonly used are shown in the illustration.

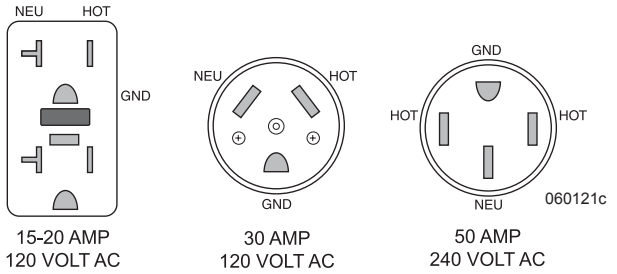

WARNING:

Before working on the electrical system, disconnect from shore power and turn off the inverter. Disconnect the negative 12 Volt DC battery cables at the batteries. Remove rings, metal watchbands and other metal jewelry before working around batteries and connectors. Use caution when working with metal tools. If the tool contacts a battery terminal or metal connected to it, a short circuit could occur causing personal injury, explosion or fire.

TRANSFER SWITCH

The transfer switch will automatically select between shore power or the generator. In the event both shore and generator power are available, generator power will override shore power after a 30 second delay. Once the generator is shut down, shore power will be available after a two second delay.

The transfer switch uses electronics to monitor voltage input for high or low voltage conditions. If the incoming voltage from the generator or shore power exceeds 132 AC Volts, or if voltage drops below 102 AC Volts, the transfer switch automatically disconnects electrical service to prevent damage that can occur to voltage sensitive equipment.

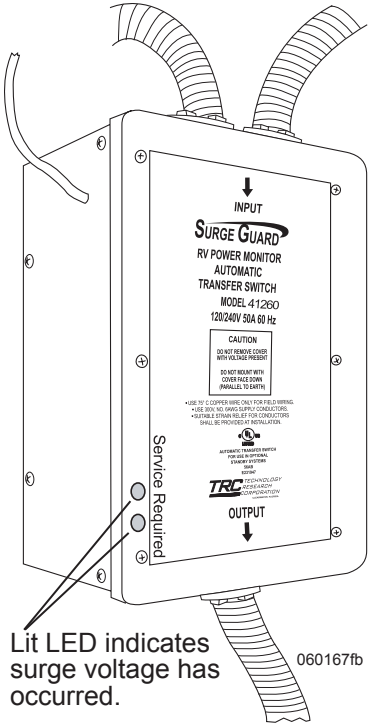

The transfer switch monitors for faulty wiring from the power pedestal and protects from reverse polarity and the dangers of an open neutral condition. A multi-mode surge protection eliminates the potential for power surges to enter the motorhome through power cables during electrical storms. If one or both LEDs are illuminated, this indicates the transfer switch has provided surge protection. The transfer switch will need to be replaced as it is damaged.

NOTE:
While the transfer switch has surge protection, sensitive electronic equipment such as laptops should be plugged into a separate surge protector.

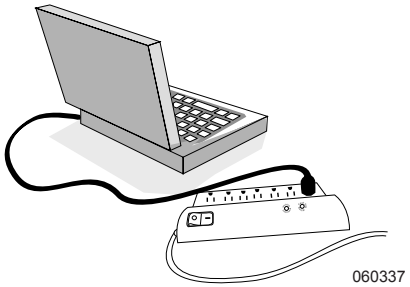

Use of a surge protector is recommended to protect sensitive equipment.

NOTE:
The electrical contacts of the shore cord are not electrically energized when the generator is operating,

NOTE:
To prevent damage to transfer switch contacts, discontinue appliance operation and turn off auxiliary electrical loads operated by outlets before connecting/disconnecting shore power or starting/stopping the generator.

GENERATOR - 120 VOLT AC

The generator is located in the front compartment of the motorhome. To open the generator, pull open on latch located above front license plate then slide out the generator. Ensure the motorhome is level as tray can slide out abruptly.

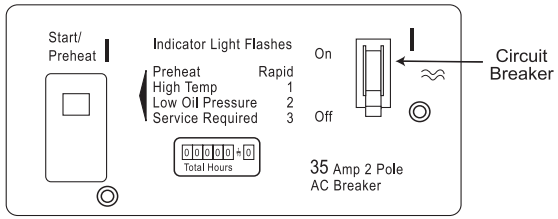

8 Kw generator

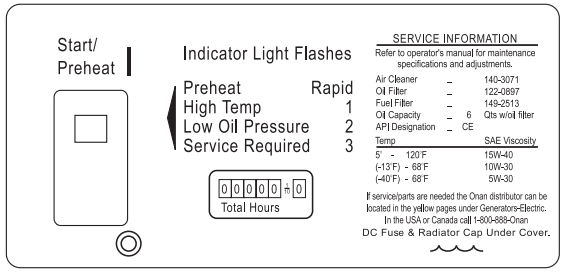

10 Kw generator

INFORMATION:
For detailed operating instructions and information refer to the generator OEM manual.

The generator can be started from the following locations:

- Generator switch on the dash.
- Generator switch on the generator.
- Generator switch on the systems control panel.
- Inverter remote panel.

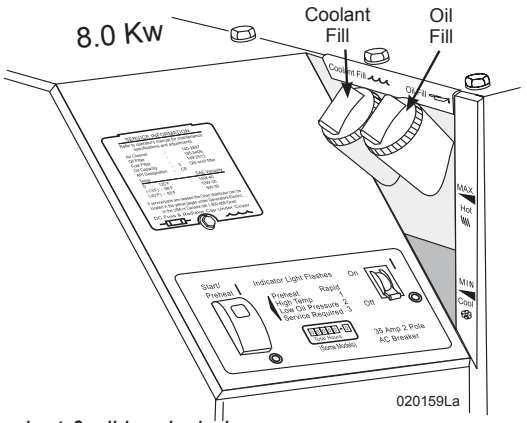

Coolant & oil level windows

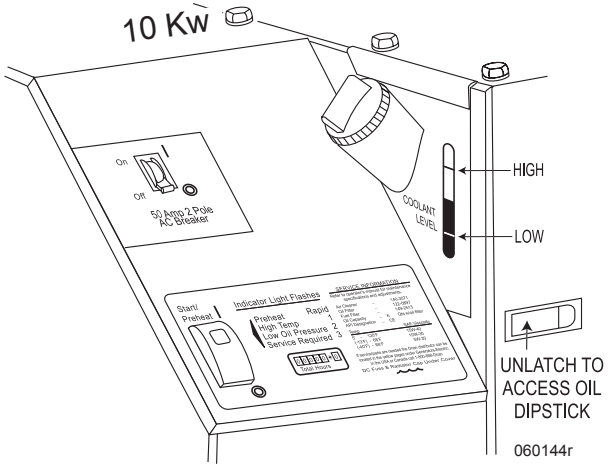

Coolant level window

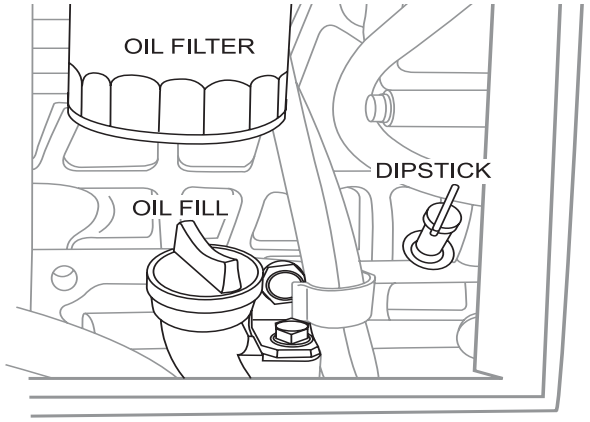

10 Kw Oil dipstick located behind access door on generator.

Pre-Start Checks

Prior to the first start of the day, perform a general inspection including oil and coolant levels. Keep a maintenance log on number of hours in operation since the last service. Perform any service or maintenance that may be due.

Before Starting the Generator:

- People and animals must be clear of hazards of electrical shock and moving parts.
- All appliances and other large AC electrical loads must be off.

CAUTION:
Allow the generator to cool before removing the coolant fill cap.

NOTE:
The generator may require priming. To prime, hold control switch in the Off position. Repeat if necessary. The generator fuel pick-up tube is cut to approximately ¼ tank so as not to run the main engine out of fuel.

Starting the Generator

Requirement for Generator Operation:

- House and chassis battery disconnect switches must be on.

Push and hold the control switch in Start position until the generator starts. Release switch. The control switch may flash up to 15 seconds, indicating engine preheat.

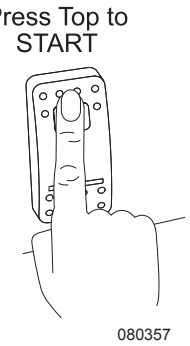

WARNING:
Excessive cranking can overheat and damage the starter motor. Do not crank the engine more than 30 seconds at any one time. Wait at least two minutes before resuming. If the generator fails to start refer to the generator OEM manual.

WARNING:
Carbon Monoxide hazard! To prevent generator exhaust gasses from entering the motorhome when parked, position the dash air conditioner to the recirculation position by turning the ignition on, activating the blower fan control and set the dash HVAC system to Recirculation mode. The blower and ignition key can now be turned off. This will close off the dash HVAC system to the outside. Engine exhaust contains Carbon Monoxide, which is poisonous and can cause unconsciousness and/or death. Inspect the exhaust system before starting the generator. Do not block the exhaust pipe or put the motorhome where the exhaust may accumulate outside, underneath, or inside the motorhome or nearby vehicles. Operate the generator only when there is a safe dispersion of exhaust. Monitor outside conditions to ensure the exhaust continues to disperse safely.

WARNING:
When parking near high grass, be sure the hot exhaust does not come into contact with the grass this can be a fire hazard. Hot exhaust pipe or hot exhaust gases can ignite grass.

CAUTION:
Exhaust extensions add weight to the generator exhaust system. Exhaust piping or manifold damage can result, allowing Carbon Monoxide to accumulate or leak into the motorhome.

Stopping the Generator

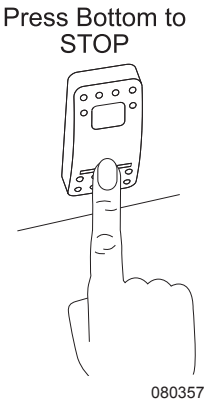

Turn off appliances and disconnect other AC loads being used. Allow the generator to run unloaded for at least one minute before shutdown to allow the engine to cool. Momentarily push the control switch to the Stop position. Release the switch.

NOTE:
The generator requires only a momentary stop signal.

Powering the Equipment

The AC output of the generator powers the air conditioners, inverter, appliances and electrical outlets of the motorhome. The number of electrical appliances that can be operated at any given time depends upon how much power is available from the generator.

If the generator is "overloaded" or a short circuit causes "over-current," either the generator will shut down or the circuit breaker will trip. If power consumption, in total, exceeds the generator power output, compensation for temperature and elevation may be necessary. Operate appliances in sequence, rather than all at the same time.

NOTE:
The generator may shut down when loaded nearly to full power and an air conditioner (or other large motor load) cycles on. Briefly during start up, an electric motor can draw up to three times the rated power. For this reason it may be necessary to operate some appliances in sequence when air conditioners or other large motor loads are on.

Compensation for temperature and elevation may also be necessary. The generator's maximum output is rated at 500 ft. above sea level. The generator will lose approximately 3.5% of its rated power for every 1000 ft. increase in elevation. High and low temperatures can also affect generator output. Power decreases 1% for every 10º F. above 85º F. Counteract these effects by operating appliances in sequence rather than at the same time.

INFORMATION:
The generator may shut down for reasons other than an overload. If a blink code appears on the control switch, refer to the OEM manual to obtain an explanation for the code.

Generator Fuel

There is always a possibility fuel may be contaminated. Diesel fuel may contain water or a microbe growth (black algae). Any contamination of fuel can greatly reduce the total output of the generator and may cause erratic AC output.

Average Fuel Consumption	Diesel 8,000 Watts (gal/hr)	Diesel 10,000 Watts (gal/hr)
No Load	.13	.1
Half Load	.49	.43
Full Load	1.02	1.01

NOTE:
The motorhome manufacturer does not cover damage to the generator caused by fuel contamination, or to appliances due to erratic AC voltage.

Resetting the Circuit Breaker

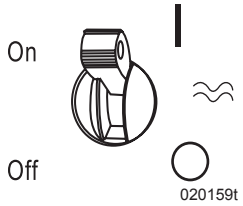

Circuit Breaker on generator

If a circuit breaker trips in the main AC breaker panel or on the generator control panel, there may be a short circuit or too much load.

NOTE:
The generator will continue to run after a circuit breaker trips.

If a circuit breaker trips, disconnect or turn off as many loads as possible. To reset the circuit breaker, switch the circuit breaker to Off, then switch back to On to reconnect the circuit.

If the circuit breaker immediately trips, there is a short in the electrical system or the circuit breaker is faulty. Call a qualified electrician. If the circuit breaker does not trip, reconnect a combination of loads that will not overload the generator or cause the circuit breaker to trip again. Remember to compensate for elevation and temperature changes when reconnecting loads.

NOTE:
An appliance or load may have a short if it causes a circuit breaker to trip after being reconnected. Do not continue to reset breaker. Have the problem corrected before resuming operation.

Generator Exercise

If use of the generator is infrequent, "exercise" the generator once a month by operating it at approximately half the maximum rated output for two hours. This "exercise" will help promote better starting, more reliable operation and longer engine life. This procedure drives off moisture, lubricates the internal engine parts, replaces the old stale fuel with a fresh supply, and also promotes removing oxides from the electrical switches and contacts.

NOTE:
Avoid short run periods of the generator. Run the generator under a load for a minimum of one-half hour.

INVERTER

The inverter changes DC battery power to AC electrical power. It also converts AC power to DC to charge the house and chassis batteries when hooked to shore power or operating from the generator. Use the inverter to supply AC power when shore power is not available and the generator is not going to be used as a secondary AC power source. The inverter supplies AC power to most outlets and appliances. Remember that using the inverter quickly consumes house battery power. Turn off the inverter when not in use to conserve house battery power. The inverter works in conjunction with the "load shed" feature of the AC load center. In instances where shore power amperage is limited to 20 or 30 amps, the inverter will "power assist" during periods of peak demand when total amount of amperage available exceeds shore power capacity. The battery cutoff switch must be on for the inverter remote panel to function and respond to commands. The remote panel is used to change variable settings.

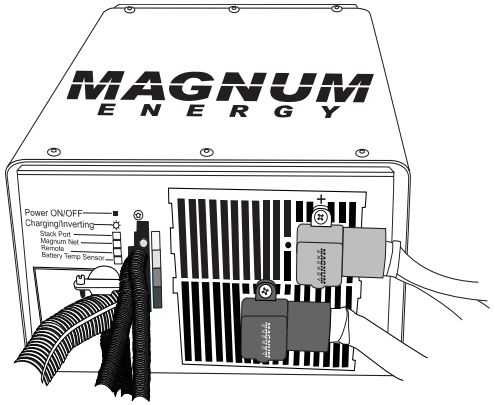

Located in curbside bay 060157f

NOTE:
The inverter is a comprehensive system with many features. It is strongly recommended to read the OEM manuals

Providing AC Power with Inverter

To Turn the Inverter On:

- Turn on house battery cutoff switch.
- Press the Inverter On/Off switch on the remote panel.

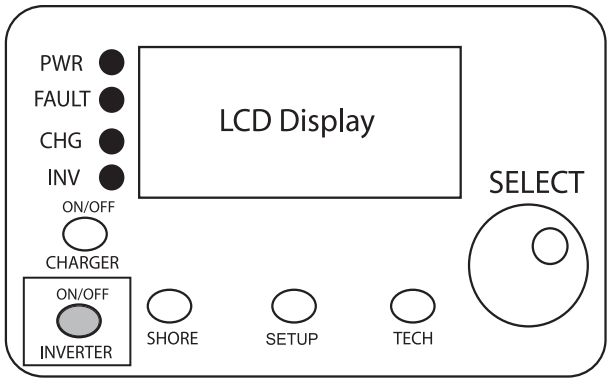

Remote Panel 060254b

If the inverter does not sense AC power from the generator or shore power, it will provide AC power from the motorhome batteries to most outlets and appliances. If the generator is started or the motorhome is connected to shore power, the inverter will automatically begin charging.

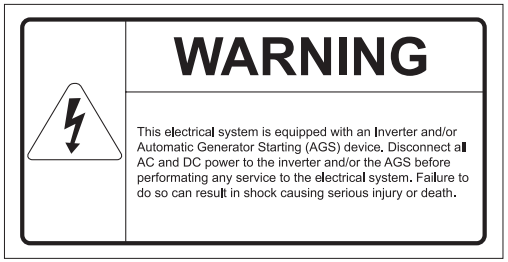

100218

Battery Charging with Inverter

The inverter will automatically begin charging when AC power is available from either shore service or the generator. The inverter uses a three-stage charge cycle to charge the batteries. The charger may be turned off if desired.

To turn the charger on and off:

- Press the switch marked Charger On/ Off on the remote panel.

Shore Setting:

The Shore setting in the remote panel adjusts the amount of AC current the battery charger can use. If hooked to less than 50 amp service, select the proper Shore setting to help prevent combined AC loads such as the roof air conditioner and the charger from overloading limited shore power service.

To Adjust Shore Power Setting:

- Press the Shore button on inverter remote.
- Turn the knob on the inverter remote left or right to scroll through shore setting options.
- Press the knob to select. An arrow will appear next to the selected setting.

NOTE:
Settings 20 Amp and below limits battery charge capacity and may hamper ability to efficiently operate DC electrical loads. Remember to reset to higher amperage when available.

Set Shore Settings To:

Shore Setting	AC Power
50 Amp	When hooked to 50 Amp shore service.
30 Amp	When hooked to 30 Amp shore service.
20 Amp	When hooked to 20 Amp shore service.
10 Amp	Used when shore service is severly limited or experiencing shore power overload.
5 Amp	Minimum charge capacity setting. Used when shore service is severly limited or experiencing shore power overload.
Contrast	75 %

Three-stage charging cycle:

The inverter optimizes battery charge rate and time using a three-stage charge cycle. Each stage of the charge cycle utilizes voltage and current to charge the batteries quickly and efficiently without damaging the batteries by overcharging or insufficient undercharging. The charge profile occurs automatically when the battery bank type (LLA or AGM) and size (amp hours) is programmed through the remote.

- **Bulk Charge Cycle:** Brings the DC voltage up high, initially between 14.2 - 14.6 Volts DC. The length of time the inverter is in Bulk Charge depends the state of charge of the batteries.
- **Absorb Cycle:** Absorb Cycle battery voltage is the same as the Bulk Charge Cycle, between 14.2 - 14.6 Volts DC. Length of the Absorb Cycle is a timed event determined by the inverter.
- **Float Charge Cycle:** Charge voltage is generally around 13.3 - 13.7 Volts DC. Approximately 80% of the charging cycle has been completed by this time.

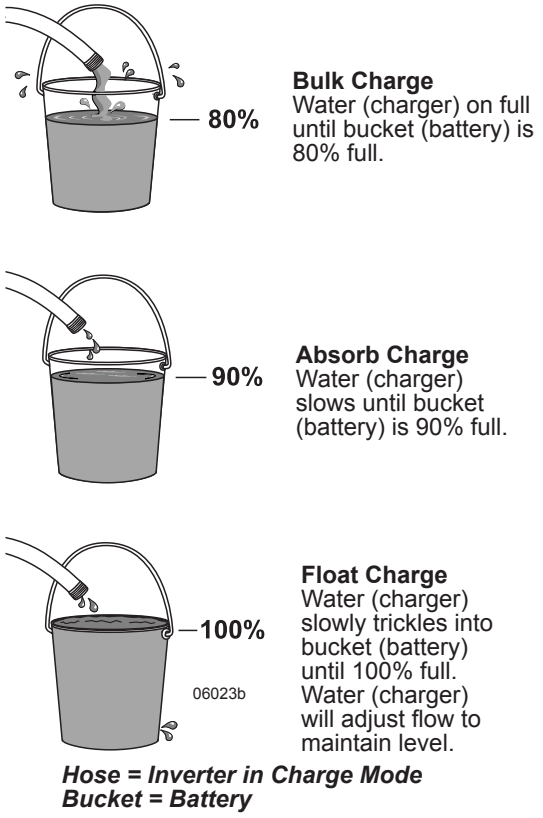

Hose = Inverter in Charge Mode
Bucket = Battery

Factory Default Settings

Function	Default
Search	5 Watts
Low Battery Cutoff	11 Volts DC
Battery Bank	400 AH Std (2 House Batt) 800 AH Opt (4 House Batt)
Battery Type	Liquid Lead Acid
Charge Rate	80 %
Contrast	75 %

Battery Temperature Sensor

A battery temperature sensor **(BTS)** is affixed to one of the house battery terminals to measure battery temperature and send that information to the inverter. When battery temperature rises, the inverter will decrease charge voltage to prevent boiling the batteries. When battery temperature cools, the inverter will raise charge voltage. Voltage compensation with temperature variation is necessary to keep charge voltage at optimum values. If the BTS cord is unplugged from the inverter, the inverter will use a temperature default setting of 77º F./25º C. as a reference point.

Auto Generator Start (Optional)

The automatic generator start **(AGS)** feature allows the inverter remote to start the generator when battery voltage or interior motorhome temperature (ATS) reaches a preset point. The AGS parameters are set at the inverter remote control. The AGS controller carries out the AGS functions.

NOTE:
The battery cutoff switch (interior house power) must be on for the AGS/ ATS features to function.

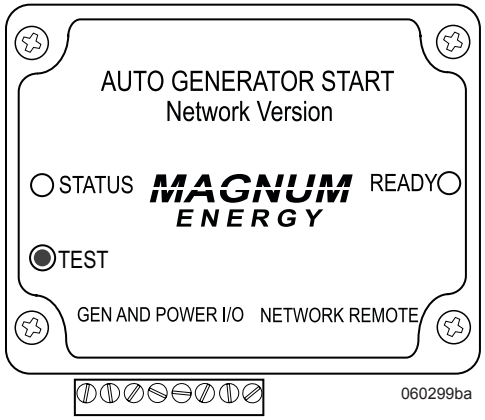

AGS Controller: *Located in the exterior front electrical compartment.*

WARNING:
The Test button intiates an Auto Gen Start test cycle. Be sure it is safe to perform a test cycle before activating a test cycle. Serious damage, personal injury or death can result.

NOTE:
Refer to the OEM manual located in the Owner's Information File Box for detailed instructions.

AGS Menu:

Press the AGS button on the remote to access the AGS menu. Rotate the Select knob to scroll through menu options and press the knob to enter a specific menu and make selections. Pressing the knob to set a function is indicated by an arrow next to the selection indicating the function is set or enabled. Press the AGS button at any time to return to the main AGS menu. AGS Menu options are labeled 01 through 08.

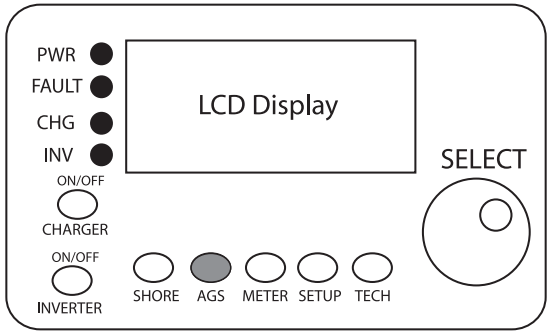

Inverter remote control

01. **AGS Control:** Rotate the knob to scroll through Off, Enable, Test, or Enable w/Quiet Time.
02. **AGS Status:** View current AGS status. Indicates what feature started the generator.
03. **Run Time Hours:** Choose generator run time duration from .5 to 6 hours.
04. **Start Temp F:** Select the interior temperature for Auto Temp Start (ATS). Be sure to select External Input as an interior temperature sensor is used for this feature. Start temp range is 65°-95° F.

05. **Start Volts:** Sets voltage at which the generator starts based on house battery voltage. Settings are 10-12.2 Volts DC. Default setting is 11.0 Volts DC. If AGS is enabled, the generator will start when house battery voltage drops to 11.0 Volts DC.
06. **Set Time:** Set the 12 hour clock on the remote. The clock will need to be reset should power to the remote be disconnected.
07. **Quiet Time:** Choose from a preset list of quiet time hours during which the AGS will not allow the generator to start. This function is only active when the AGS Control (menu 1) is set to Enable w/Quiet Time.
08. **AGS Tech:** Used by service personnel for troubleshooting.

AGS Programming

The clock must be set and the AGS feature enabled before the generator will start based on voltage. The default run time is two hours. Default start voltage is 11.0 Volts DC.

Programming AGS:

1. Press the AGS button on the inverter remote.
2. Rotate knob to menu 06, Set Time.
3. Press knob to enter Set Time menu. Rotate knob to set hour of day, press to set. Press then rotate knob to set minutes, press to set. Press then rotate knob to set AM or PM, press to set.
4. Press the AGS button on the inverter remote. Rotate knob clockwise to Enable then press knob to set Enable or continue rotating to Enable w/Quiet Time. If enabled with Quiet Time, select the pre-programmed quiet time hours from AGS menu 07. The clock can also be set if Quiet Time is enabled from this menu.

The generator is now programmed to start when house battery voltage drops to 11.0 Volts DC then run for two hours. Start voltage and run time can be changed to suit needs. Remember to disable the AGS feature when performing service or placing the motorhome in storage.

WARNING:
Disable AGS when performing service or when storing the motorhome. The generator produces high voltage and combustion gases during operation. High voltage and/or combustion gases can result in severe injury or death.

ATS Programming

The clock must be set and the AGS feature enabled before Automatic Temperature Start is enabled. The default start temperature is 75° F. Default run time is two hours. If after two hours, interior temperature is above default start temperature, the generator will continue to operate for another scheduled run time.

Preset thermostat temperature for the roof air conditioner so when the generator starts, the roof air conditioner will begin cooling.

Programming ATS:

1. Press the AGS button on the inverter remote. Rotate knob to menu 04, Start Temp.
2. Press knob to enter Start Temp. Rotate knob to Ext Temp then press. The remote is now programmed to use the internal temperature sensor.
3. Rotate knob to select the desired start temperature (65°-95° F.) then press knob to select.

Disabling AGS/ATS

1. Press the AGS button on the inverter remote.
2. Rotate knob counterclockwise to Off then press knob.

The AGS feature is now disabled.

Power Assist

During periods of peak demand for AC power when connected to limited shore power, the inverter will automatically enable “Power Assist” mode using house battery power. The inverter will supply the added current necessary to meet the demand. Power assist mode will occur only when the inverter is in Float or Absorb charge modes ensuring battery charging is maintained when possible.

When demand for power is reduced and shore power can adequately supply the power, Power Assist mode will automatically disable returning the inverter to charge mode. If demand for power once again exceeds the shore power supply, Power Assist will automatically be enabled. The assist cycle will continue until house battery voltage falls within .3 Volts DC of the Low Battery Cutoff setting in the inverter remote panel.

LOAD CENTER - 120/240 VOLT AC

The main 240 Volt AC panel receives power from the transfer switch supplied by either shore power or the generator. AC power is supplied to the 50 Amp main breaker first, then power is supplied to individual branch circuit breakers. The panel label describes the breaker layout and item, outlet or appliance to which they pertain.

<u>WARNING:</u>
The 120/240 Volt AC panels contain high voltage which can cause serious injury or death. Before beginning any work or testing procedures involving the electric panels, or any of the branch circuits, the motorhome must be unplugged from shore power, the generator off, and the inverter in the off position. Disable the Auto Gen Start feature. Certain testing procedures may require the AC power to be on. Only qualified personnel with electrical backgrounds should attempt any testing procedures.

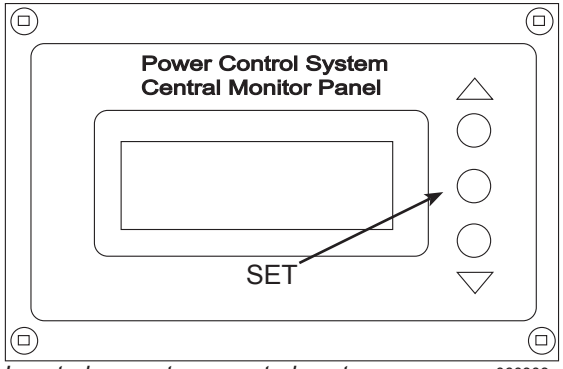

Located on systems control center 060303c

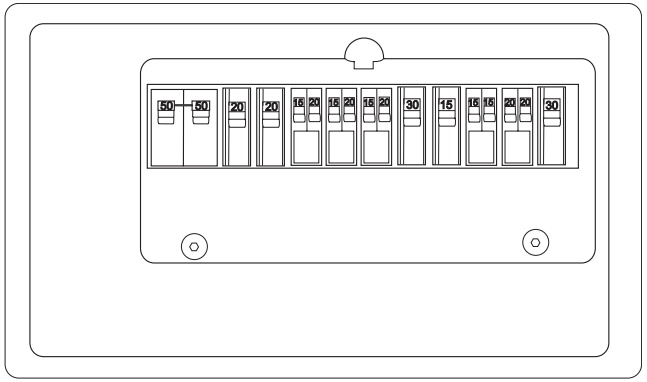

Load center located above pilot seat 060357d

Power Control System

Overview:
The Power Control System (PCS) monitors AC power consumption. If AC power consumption exceeds the supply, the system automatically reduces power consumption by "shedding" predetermined loads. The system also monitors AC voltage and current as well as polarity. A PCS monitor panel located on the systems control panel details operating conditions.

Requirements:
- Connect to shore power or start the generator.
- Turn on the battery cutoff switch.

Operation:
The PCS automatically senses whether it is connected to 30 Amp 120 Volt AC shore power or 50 Amp 240 Volt AC shore power or the generator. If connected to 20 amp shore power, the remote will need to be changed to 20 amp service by using the Set button.

The PCS controls operation of five possible loads to shed. Shedding a load means removing power from the load allowing extra power to operate other loads of more importance. These shed loads are typically heavy power consuming loads that can be temporarily postponed until enough power is available to safely operate the loads without the possibility of overloading the shore power breaker.

Load shed example, if average current demand exceeds 24 Amps when hooked to a 30 Amp service, the system will automatically shed load Number 1 to keep average current demand below 80% (24 Amps) of the 30 Amp shore service to avoid the possibility of overloading the shore power breaker. If shedding load number 1 is insufficient to avoid tripping the shore power breaker, the system will shed load 2 and so on until current demand in total is within safe operating limits.

The PCS remote will indicate which loads have been shed. Repeatedly press the Down arrow on the remote to display the load shed list. Any loads that are shed will automatically be reactivated when sufficient power is once again available.

NOTE:
20 amp shore service mode is not automatically detected and the operator must manually set 20 Amp mode when connected to 20 amp shore power.

Loads are shed in order of priority.
1. Water Heater
2. Rear AC
3. Galley AC (option)
4. Washer Dryer (option)
5. Front AC

Load Status
Water Heater ON
Rear A/C ON
Mid A/C ON
Dryer ON
Front AC ON

Load shed screen

Power Share and Reduced Charging:

Depending on operating conditions, amperage of shore power and battery state of charge, the system may attempt to reduce battery charging as a way to conserve AC power during peak demand or if batteries are of sufficient charge, the system will automatically enable the inverter to help supply extra power during peak demand periods. These operating conditions will be indicated on the remote.

Operation Modes	
Bat Charger	Normal
Inverter	Normal
Load(s) Shed	= 0

Operation Screen

Power Monitoring:
The system monitors voltage and current as well as polarity when connected to shore power or operating from the generator. Refer to the remote to monitor voltage and current.

Line Status		
L1	118Volts	07Amps
L2	115Volts	00Amps
Both		007Amps

Voltage & Current screen

Circuit Breakers

The internal configuration of the circuit breaker is designed to trip when excess current causes the breaker to heat up. The trip action of the circuit breaker can occur within milliseconds. Breakers are designed to operate at a continuous load of 80% of the breaker's rated capacity.

For example: A breaker with a 20 Amp rating will operate a continuous 16 amp load. This design leaves a small amount of working capacity within the breaker.

When an inductive load is applied, such as when an electric motor turns on, the motor starts to spin and current consumption may momentarily exceed the rated capacity of the breaker. As the electric motor comes up to operating speed, the electric motor's current consumption will decrease.

The AC current load then falls back into the breaker's rated 80% set point. This electric principle should be kept in mind when connected to less than 50 Amp service and using appliances with electric motors, such as air conditioners.

When using outlets, care should be considered when applying loads such as electric motors, heaters, coffee makers, toasters, hair dryers or other large current consuming loads. The current rating is usually stated on most electrical items. The current rating will either be rated in amps or watts. Current ratings stated on electrical items will change slightly with voltage fluctuations. As voltage increases, current consumption decreases. As voltage decreases, current consumption increases. This may explain why in some instances items operated at borderline voltage to current tolerances may seem fine in one location but problematic in another.

NOTE:
To calculate watts to Amps divide the watt figure by the voltage from which the item operates from. For example: The electrical item is rated at 1370 watts. Divide that by the operating voltage of 115 Volts AC which equals 11.913 Amps. Use this formula to calculate the amount of load and compare to the available power supply.

GFCI Breakers & Outlets

A **Ground Fault Circuit Interrupter (GFCI)** can be found in two different types of applications. One type is incorporated in a breaker used in 120 Volt AC breaker panels; the other is incorporated in an outlet.

The GFCI, whether it is a breaker or an outlet, offers two types of protection. One type of protection is from over-current or shorts to guard against hazardous ground fault currents that can result in injury or death. Ground fault currents are currents that flow from the "hot" or power terminal through a person to the ground. **For example:** touching a faulty appliance while making contact with an electrical ground such as a water fixture or the earth.

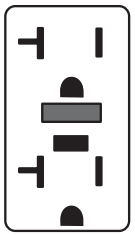
060072



RM03A0003
GFCI Breaker

The GFCI offers protection against the type of shock that can result from faulty insulation, wet wiring from inside an appliance, or any device or equipment plugged in or wired to that circuit. The ground fault portion of the outlet or breaker uses sensitive electronics inside the outlet or breaker to detect a ground fault problem. The electronics monitor the normal current of power flowing to the hot (black) wire through the load (eg. a light bulb or appliance) and coming back on the neutral (white) wire. If a small amount of current comes back on the safety ground wire, the electronics will trip the breaker or outlet, stopping the flow of electricity. The amount of current it takes to trip the device from a ground fault varies slightly from the different outlet or breaker manufacturer (approximately 4 to 6 milliamps or less).

NOTE:
One milliamp is 1/1000 of one Amp.

Electrical shocks resulting from ground faults can be felt, but such a shock is considerably less than one without ground fault protection. People with medical conditions that make them susceptible to shock can still be seriously injured.

A GFCI outlet or breaker will not protect against shock from a normal current flow. **For example:** a shock from touching both metal prongs of an electrical cord or appliance while plugging it in.

WARNING:
If a breaker or outlet continually trips, do not continue to reset breaker or outlet until the problem has been identified and corrected.

NOTE:
The ground fault outlet or breaker should be tested once a month to ensure it is operating. Press the TEST button on the outlet or breaker. It should trip with an audible "click." The breaker or outlet will not trip if AC power is not present at the device. If power is present and the device will not trip, replace it before using that circuit.

DISTRIBUTION PANEL - HOUSE 12 VOLT DC

The 12 Volt DC house distribution panel is located above the pilot's seat. This panel contains fuses that protect the electrical circuits. These fuses are a standard automotive type. The LED will glow when a fuse is blown.

Refer to the fuse label for circuit assisgnments.

D1 Closet Lt Porch Lt 15 Amp	D10 Living Rm Lt 20 Amp
D2 Water Pump 15 Amp	D11 Galley Lt 20 Amp
D3 Furnace 20 Amp	D12 Vent Fans 15 Amp
D4 Elec Water Heater 15 Amp	D13 Awning 15 Amp
D5 Ceiling Fan Slide Out Hose Reel 15 Amp	D14 12 Volt Outlet 15 Amp
D6 T Stats TV Boost Satellite, Stove 15 Amp	D15 Sanicon 20 Amp
D7 Bedroom Lt 15 Amp	D16 Bedroom Slide 30 Amp auto-reset breaker
D8 Bathroom Lt 20 Amp	EMPTY
D9 Dinette Lt 20 Amp	EMPTY

Typical circuit assignments. Refer to actual label on fuse panel cover.

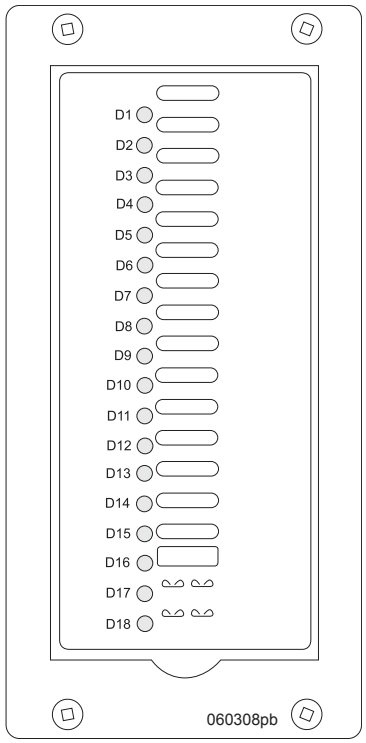

Fuse panel located above pilot's seat

FUSES & CIRCUIT BREAKERS - 12 VOLT DC

Circuit protection devices are installed to protect circuit wiring in case an over-current condition occurs. An over-current condition usually falls into one of two categories: a short circuit or overload. A short circuit is when a break or fault in the circuit allows electricity to flow directly to ground. Circuit overload is when circuit amperage or the electrical load exceeds designed operating parameters.

Several factors are considered when designing a circuit to operate an electrical load. The amperage required to operate the electrical load will determine wire size and wire insulation type. The application of the electrical load can determine whether a fuse or circuit breaker is selected.

Circuit protection devices come in a variety of shapes and ratings. Most common are the blade style plug in fuse and auto-reset circuit breakers. These types of circuit protection devices are readily available from auto supply stores. Circuit protection devices in a 12 Volt DC system are actually rated at 32 Volts DC due to voltage variances in a 12 Volt DC system. Replacement devices must use the same amperage rating and be of the same type as the original for proper circuit protection and electrical safety. Generally a fault exists in the circuit when an over-current condition has caused a fuse to blow or circuit breaker to trip. Until the condition that caused the fault is corrected, replacing the fuse may be a temporary fix. Continually replacing the fuse or circumventing the protection device can jeopardize safety and circuit integrity.

WARNING:
Replacement fuses or circuit breakers must be of the same type and rating as the original equipment. Installing protection devices other than the original type and rating will create a safety hazard that will potentially result in circuit and/or component damage and fire.

Fuses:

Blade fuses comes in three sizes: Mini, Standard and Maxi. Fuse color determines amperage ratings. A blown fuse indicates an over-current condition has occurred. Typically the conductor strip in the center of the fuse is broken, but not always, and is best verified by use of a 12 Volt DC test light. Two exposed terminals are located atop the blade fuse housing.

The fuse is good if the test light illuminates at both terminals. This may require the circuit be activated for power to be present at the fuse. The fuse is bad if the test light illuminates at only one terminal.

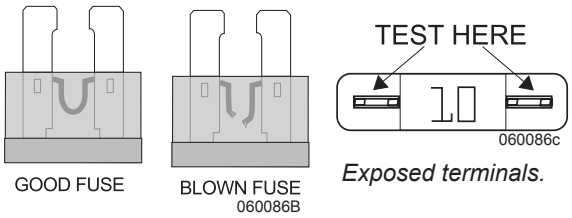

Exposed terminals.

BLADE FUSE GUIDE			
	Mini	Standard	Maxi
Black	1		
Gray	2	2	25
Violet	3	3	
Pink	4	4	
Tan	5	5	70
Brown	7 1/2	7 1/2	35
Red	10	10	50
Blue	15	15	60
Yellow	20	20	20
Clear	25	25	80
Green	30	30	30
Blue-Green	35		
Orange	40		40

Mini, Standard and Maxi fuse colors and amperage ratings

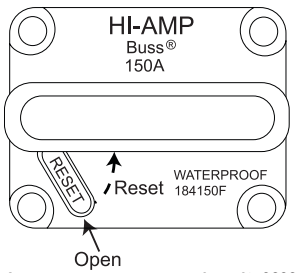

Large amperage circuit breaker.

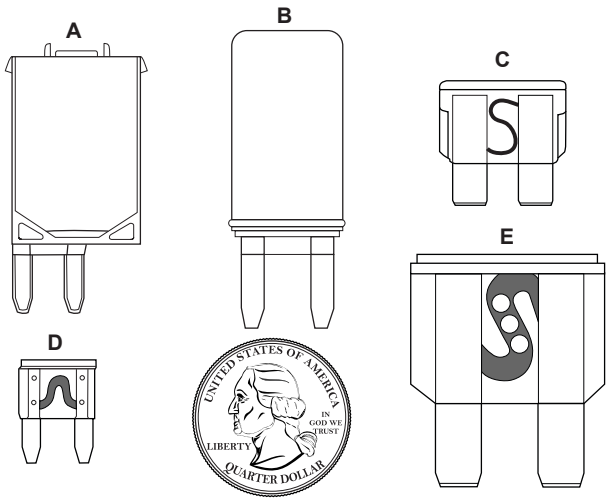

080528e

Quarter is used for size comparison of fuses.

A. Manual Reset Circuit Breaker
B. Auto Reset Circuit Breaker
C. Standard Fuse
D. Mini Fuse
E. Maxi Fuse

Representation of various fuses and a circuit breaker.

There are three types of Circuit Breakers:

Type 1 is an automatic reset type circuit breaker. This type of breaker may cause component damage under a short circuit condition. It will not damage the circuit, the installation or present a safety risk

Type 2 is an automatic reset type circuit breaker. Under a short circuit condition, this type of breaker will not cause component damage or damage to the circuit, the installation or present a safety risk.

Type 3 is a manual reset circuit breaker. This type of breaker will open under a short circuit condition and must be manually reset.

BATTERIES - HOUSE

House batteries are designed for use with 12 Volt DC operated lights, appliances and inverter.

Type of House Batteries:

- Liquid Lead Acid (LLA)

Deep Cycle Batteries:

Deep cycle batteries are best suited for use with 12 Volt operated lights, appliances and inverter. Deep cycle batteries are designed to have half of their capacity discharged before being recharged.

CAUTION:
Tap water contains minerals that can alter battery chemistry and ruin the battery. Use only distilled water when refilling the LLA battery.

IMPORTANT!

IMPORTANT!
This motorhome is equipped with Non-sealed Liquid Lead Acid (LLA) house batteries which require regular maintenance. Lack of maintenance will result in a shortened battery life.

NOTE:
Read your owners manual for storage, dry camping and battery maintenance.

MONACO CUSTOMER SERVICE: 1-877-4-MONACO

060331

Battery Maintenance

Liquid Lead Acid (LLA) battery cells should be checked at least once a month. The level should be above the top of the plates, but not overfull. Use only distilled water to refill the battery. A battery with a low electrolyte level will rapidly boil out the water once the plates have been exposed to air.

The house batteries are equipped with a Flow-Rite battery fill system. This battery fill system includes the following features:

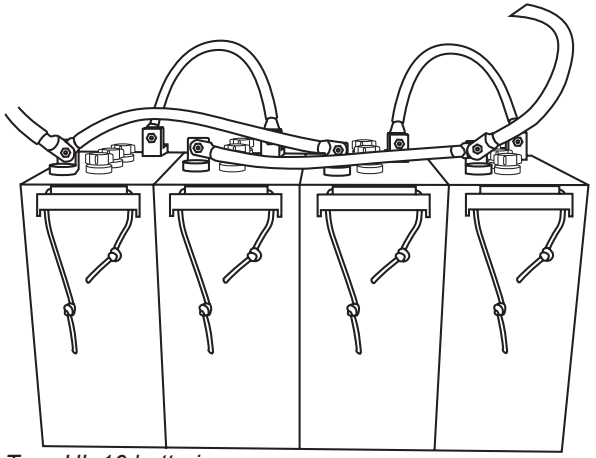

Type UL 16 batteries connected in series/parallel

060343

- A single connection to the water source will fill all cells of all batteries.
- Batteries are filled with a hand pump.
- An automatic valve system fills only the cells that need water, and automatically stops water flow when water level is correct.

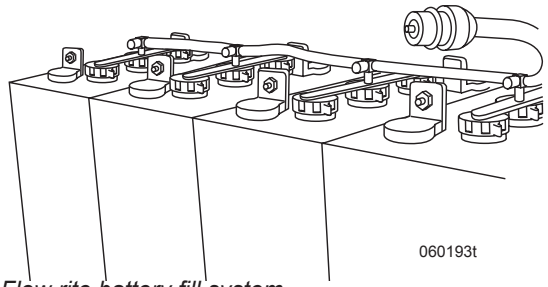

Flow rite battery fill system

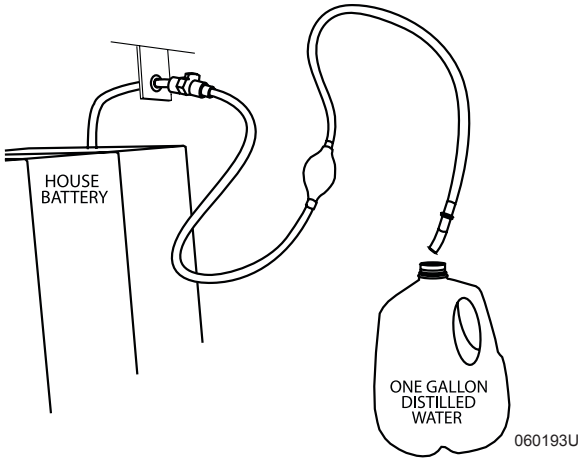

Use only distilled water

A water fill manifold connects all house battery cells to the quick-disconnect fitting located in the house battery bay. Insert the hose end into a bottle of distilled water. Prime the bulb by squeezing until the bulb fills with water. Attach the hand pump to the quick-disconnect, and operate the hand pump until resistance is felt. All battery cells are now filled to the correct level.

Check the water level of house batteries at least once a month by attempting to add water to the system. Use only distilled water.

NOTE:
The cap on individual cells is threaded onto the battery and can be removed to inspect water level.

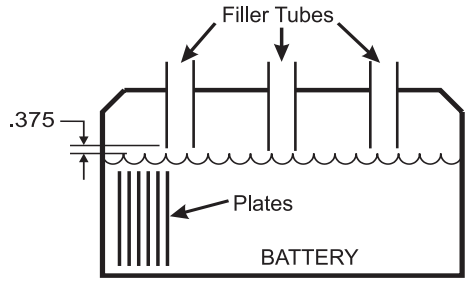

Battery State of Charge	Spec. Gravity	Voltage
100%	1.265	12.7
75%	1.225	12.4
50%	1.190	12.2
25%	1.155	12.0
Discharged	1.120	11.9 or Less

NOTE: The distilled water level in battery should be 3/8" below the filler tube. 020034

Periodically check the batteries for corrosion and cracks. Replace vent plugs that are cracked or missing. Keep the top of the batteries clean. The accumulation of electrolyte and dirt may permit small amounts of current to flow between the terminals that can drain the battery.

Check the battery connections for tightness and corrosion. Battery cables will occasionally need the corrosion removed to clean the cable ends and battery terminals. The batteries and trays will also need to be cleaned.

WARNING:
Liquid lead acid batteries produce hydrogen gas while charging. Do Not smoke around batteries and keep all sources of ignition or flames away from batteries. Hydrogen is an extremely flammable gas and can explode resulting in fire, personal injury, property damage or death.

WARNING:
Sulfuric acid in the batteries can cause severe injury or death. Sulfuric acid can cause permanent damage to eyes, burn skin, and eat holes in clothing. Always wear splash-proof safety goggles when working around the battery. If the battery electrolyte is splashed in the eyes, or on skin, immediately flush the affected area for 15 minutes with large quantities of clean water. In case of eye contact, seek immediate medical aid. Never add acid to a battery once the battery has been placed in service. Doing so may result in hazardous splattering of electrolyte.

Battery Tools:

A few simple hand tools are required to work on the batteries and should be kept aside for working on batteries only.

- Wear old clothes. Clothing is easily damaged when in contact with batteries.
- Wear thick rubber gloves that are solvent and thinner proof.
- Keep a ½" box-end wrench, wire brush and pair of adjustable pliers separate from other tools.

Safety Precautions:

Working on batteries requires a few safety procedures:

- Never short battery terminals or cables with anything metallic to “test” batteries for power.
- Wear safety glasses. Even a small amount of corrosion or acid can be very painful and harmful to the eyes.

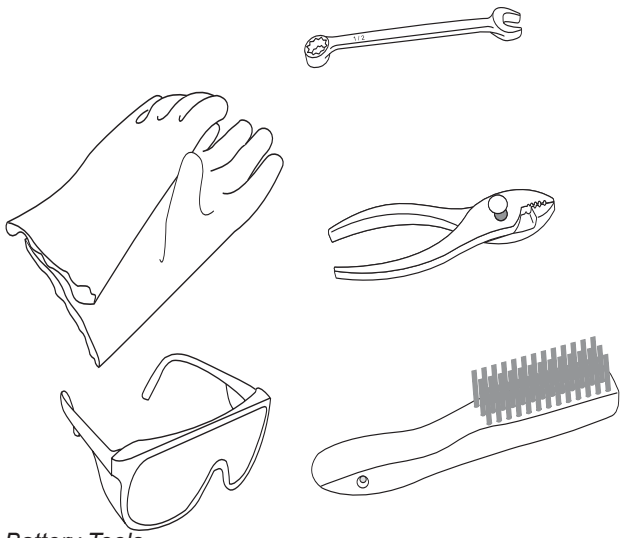

Battery Tools 070223

- When wire brushing terminals, work the brush in one direction away from you. Avoid contacting opposite polarity terminals. Avoid breathing the powder. A particle mask can be helpful.

Before removing cables or performing major maintenance procedures, draw a diagram of how the batteries fit in the tray and the relative locations of the positive and negative terminals. Draw a diagram of cable routing, polarity and how the cables attach to the batteries. Mark all cables positive and negative respectively. One misplaced cable can have disastrous results.

- Before removing any cables, stop all charging or discharging current.
- Unhook from shore power or stop the generator.
- Use the remote to turn off the inverter.
- If the motorhome has solar panels, remove the fuse near the battery connection or place a blanket over the top of the panels. Unhooking charge wires from the solar panel during daylight hours can damage the controller.
- Remove all rings and wristwatch to prevent short circuits. A severe burn can instantly occur.
- Open the battery compartment door and slide tray (if equipped).
- Turn off the interior house power and the main battery disconnects.
- Wear safety glasses and thick rubber gloves when working around batteries. Battery tools required: a wire brush, ½" box-end wrench, adjustable pliers and a box of baking soda. Prepare a baking soda/water solution. Keep paper towels handy.
- Thoroughly rinse batteries with plain water before disconnecting cables. Remove all cables large and small. Remove the batteries, if necessary. If removing the batteries, the temperature sensors for the inverter and solar panel will need to be removed. Double sided sticky tape will be needed to adhere the sensors to the battery. The sensor may also be placed between two batteries.
- Wire brush cable ends and battery posts. Dip the ends of the cables in baking soda (neutralizing) solution.
- With battery caps securely in place, carefully apply solution to the terminals. Using a paper towel, dip it into the solution and wipe the top of each battery.
- **Do not** allow solution to get into any battery cell. This will neutralize acid and ruin the battery.
- Rinse cables and batteries thoroughly with clear water.
- Use the rest of solution to clean battery tray. Thoroughly rinse tray, battery area and sidewall of the motorhome with water.
- If equipped, operate the battery trays several times while simultaneously rinsing with water. Use Kwiklube spray or equivalent to lubricate the moving components.
- Install the batteries in correct order noting their relative post location. Remove old sticky tape from the temperature sensors. Clean the sensors, an area on the battery. Apply sticky tape to the inverter temperature sensor. Adhere the sensor to the battery. Secure the solar panel thermistor by overlaying the thermistor with the sticky tape to the battery. Install tie-downs securing the batteries into position.
- Carefully install all positive cables. Double check before making each connection to confirm they are in the right location.
- Install the negative cables. When hooking up the ground cable going to the frame there will be a small spark indicating a momentary current draw. This is a normal process of charging the capacitors in the inverter. If there is a heavy flash STOP. Something is wrong. Double-check all wiring and battery post location for error.

- Verify proper voltage in the system before turning on the main battery disconnects.
- If the motorhome has a Solar Controller, place the battery selection switch to House Battery Volts. It should indicate about 12-13 Volts DC. If the voltage is other than this reading, check the cables and routing. If the voltage is okay, remove the blanket from the solar panel. Coat terminals and posts with a protective coating to seal the connections from the gas and electrolyte.
- Turn on the main battery disconnect switches.

NOTE:
The automatic generator start feature will need to be programmed.

WARNING:
Liquid lead acid batteries produce hydrogen gas while charging. Hydrogen gas is highly flammable. Do Not smoke around batteries. Extinguish all flames in the area. Hydrogen gas can explode resulting in fire, personal injury, property damage or death.

CAUTION:
Many types of petroleum based products or battery by-products can damage the paint finish. If the chemicals come in contact with painted surfaces, immediately wash with a mild automotive detergent and clear water.

Testing the Battery

A battery can be tested and/or monitored several ways.

Checking the Electrolyte Solution (LLA Only):

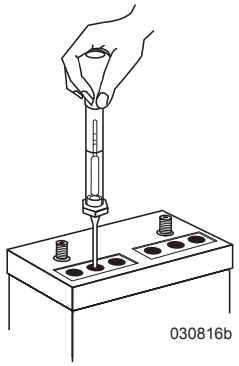

Hydrometer (cylinder type) shown testing LLA type battery.

The most efficient way to test the batteries is check the electrolyte solution with a hydrometer. Many styles are available, from types with cylinder graduation (shown in the illustration) to types with floating balls. Hydrometers can be purchased from most auto parts stores. The hydrometer tests the battery's electrolyte solution that is measured in specific gravity. Distilled water has a specific gravity of 1,000. The hydrometer is calibrated to this mark. Pure sulfuric acid has a specific gravity reading of 1,840. The acid is 1.84 times heavier than water. The electrolyte solution is about 64% water to 36% acid (fully charged battery). A fully charged battery at 80º F.., has a specific gravity reading of 1265 per cell.

Hydrometers with cylinder graduation are graphed and the exact state of specific gravity can be determined.

Temperature and recent battery activity (charging or discharging) affect the hydrometer readings. It is best to check the battery when it has been at rest for at least three hours, although readings taken at other times will give a ballpark figure. When using the hydrometer, draw the electrolyte solution up into the tube.

Allow the hydrometer to attain the same temperature as the electrolyte solution. Note the reading for that cell. Complete the same test for the rest of the cells on that battery bank. The hydrometer is calibrated at 80° F. Temperature affects the hydrometer readings. The higher the electrolyte temperature, the higher the specific gravity reading. The lower the temperature, the lower the specific gravity reading. Add or subtract four points for each 10° variance from the 80° F. chart. Readings between cells should not vary more than 50 points.

If one cell in a particular battery bank being tested is at a 50% state of charge and the other cells indicate a full state of charge; charge only the low battery to see if the low cell will come up and at the same time do not over-charge the healthy cells.

If the low cell does not improve after charging, this battery can damage the rest of the battery bank and should be replaced. An accurate digital Volt meter + - .5% will also give an indicator of the battery's state of charge.

NOTE:
See the chart for temperature compensation. Liquid levels should be even between the cells of the battery being tested as it will affect the accuracy of the test.

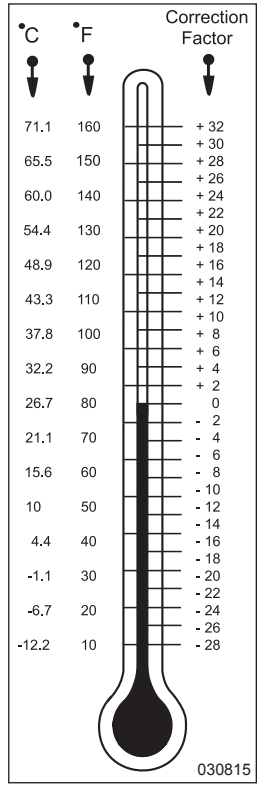

Temperature Correction Chart

Placing a load on the Battery:

Another test that can be performed is to place a specific load on the battery for a predetermined length of time equal to that particular battery's rating.

This machine is usually an adjustable carbon pile that can vary the load being applied to the batteries while monitoring voltage to see if they will perform to their specific rated capacities.

Charge Time & Consumption Rate

Calculating Run Times:

Calculating run time figures when operating 120 Volt AC electrical items with an inverter can be exponential due to battery characteristics. Flow characteristics of electrons vary with different battery types and chemical compositions. Deep cycle batteries are generally designed to slowly release a majority of their charge capacity. Deep cycle batteries are rated in amp hours (Ahrs) with the discharge occurring over an extended period of time before the battery is charged. Engine starting batteries are designed to quickly release large amounts of current for a short duration, without depleting battery reserves. Commercial type batteries bridge the gap of deep cycle and engine batteries. Commercial batteries release medium amounts of current over a longer period of time but they are not designed to cycle their charge capacity.

The working range of a deep cycle battery is between 50 and 100% state of charge (SOC). Deep cycle batteries should not be cycled below 50% state of charge. Discharging a deep cycle battery below 50% state of charge shortens the life of the battery. Deep cycle batteries use an amp hour rating that is usually calculated over a 20 hour discharge interval. For example: A deep cycle battery with a rated capacity of 100 Ahrs. is designed to release current at the rate of 5 amps per hour. Multiply a 5 amp load over a 20 hour discharge period equals the rated 100 Ahr. capacity.

These discharge figures are calculated with the battery starting at 100% state of charge with the battery at 80º F. when the discharge cycle begins. However, increasing the discharge load applied to the battery from 5 amps to 10 amps on a 100 Ahr battery does not yield ten hours of discharge time. This is due to the internal reactions that occur when a battery is discharging. Actual discharge time for a 10 amp load may be closer to eight hours of discharge time. Increasing the load applied to the battery to 20 amps will not yield five hours discharge time but may be less than three hours. It might be understood as a point of diminishing return.

Calculating applied loads to an inverter to approximate run time from the battery amp hours available is not an equal trade up when voltage is inverted and amperage is calculated. When the inverter is used to operate an AC load it uses approximately eleven times the DC current needed from the battery when inverting 12 Volts DC to operate the 120 Volt AC item.

There is also a small efficiency loss of about 10% when inverting. For example: When using the inverter to operate an AC electrical item, which has a current draw rating of 2 amps, the inverter will use over 20 amps DC power from the batteries.

Determining Current Consumption:

First determine the amount of current used by an AC item. For example: The television is rated at 200 watts at 120 Volts AC. Calculate watts to amps. Divide 200 watts by the operating voltage of 120, this equals 1.6 amps. Multiply 1.6 amps AC current by a factor of ten the inverter will use, this equals 16 amps DC battery current. Add the revised 10% efficiency loss figure, this calculates to a total of 17.6 amps DC. If the battery bank capacity is rated at 500 Ahrs., actual elapsed time to the suggested 50% state of charge would net viewing time for the television at approximately 13 hours in ideal conditions.

The run time figure will vary greatly with the actual state of charge of the battery bank when the discharge process begins. Ambient temperature, combined with other working loads, such as lights and parasitic loads applied to batteries, affect run times. Calculating the exact run time is not precise due to all the variables and equations involved; however, an approximate time figure can be obtained. Proper battery maintenance and charge cycles affect battery performance. Observe the battery condition with hydrometer and voltage readings. Use only distilled water when filling batteries. To achieve the highest quality of battery performance and longevity maintain the batteries in their proper operating range.

How long will the batteries last?

Conduct this eight-hour test to determine how long your particular battery bank will operate before dropping below 50% state of charge.

1. Before beginning the test, be sure the batteries are at 100% charge by verifying with a hydrometer or an accurate voltmeter.
2. Turn the interior house power on. Turn on three lights. Switch refrigerator operation to propane. Turn the inverter on and operate the TV for two hours. After two hours turn the TV and the inverter off.
3. After the eight-hour period, turn off the lights, refrigerator and interior house power. Allow the battery electrolyte to stabilize for at least one to three hours.

Test the batteries again with a hydrometer or voltmeter. Are the batteries above or below 50% State of Charge? This test will give an idea of how long your particular battery bank will actually last.

SOLAR PANEL (OPTIONAL)

The solar power system consists of a solar panel, charge controller and a remote monitor panel located in the hallway. This system can deliver enough power to offset the normal day-to-day drain on house batteries caused by various parasitic electrical loads, such as radio memories, alarm systems and natural self-discharge of batteries.

Charge Controller

The charge controller automatically charges the house and chassis batteries whenever sunlight is available. Features include Pulse Width Modulation (PWM) charging. This means the controller delivers full charging amperage (Bulk Charge) when batteries are low. As battery voltage rises, charge amperage lowers (Absorption Charge) until the batteries reach their set voltage point. The charger then delivers low amperage (Float Charge) to maintain the batteries.

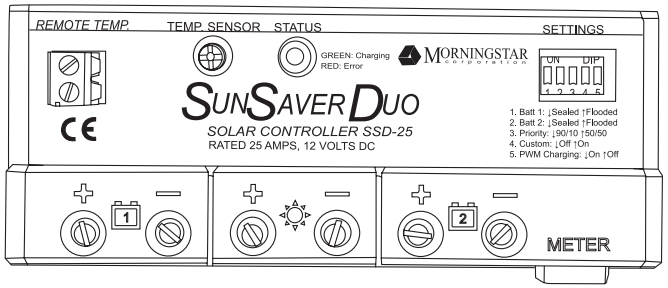

Charge Controller *060361b*

The charge controller is located on the ceiling of the bay behind the service center. The green Charging LED (see illustration) illuminates when sunlight is reaching the solar panel. Solid green indicates bulk charging; flashing green indicates absorption or float charging. The LED will glow red if errors occur. A red LED means that the system is not charging. An error code will also display on the remote monitor. See the OEM manual for troubleshooting. It is normal for the controller to become warm to the touch, especially when processing higher amperage.

NOTE:
The charge controller is limited to 425 watts maximum input.

NOTE:
This system will charge only lead-acid batteries.

CAUTION:
The charge controller may be warm to the touch. This is a normal function of the charge controller.

Maintenance:

Perform the following maintenance tasks twice a year for best performance.

- Tighten all terminals. Inspect for loose, broken or corroded connections.
- Ensure all wire clamps and tie-downs are secure.
- Verify LED indication matches system conditions.

NOTE:
See OEM manuals for more information.

Fuse Location:

- 36' & 43' = Curbside rear compartment on rear electrical panel.
- 40' = Roadside house battery compartment.

Monitor

The remote monitor is located in the hallway. The monitor features a display screen, three operation buttons and three battery state of charge LED's for a quick reference of battery charging levels. Press the center button to scroll through four main screens, and use the left or right arrow buttons to scroll through sub-screens.

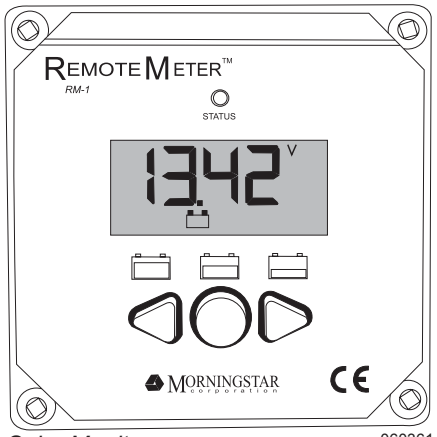

Solar Monitor 060361

Main Screens:

- **Solar Charge Current:** Press the left and right arrows to view solar amp hours and maximum charge current.
- **Battery 1 Voltage:** This is house battery voltage. Press the left or right arrows to view battery amp hours and minimum and maximum battery voltage.
- **Battery 2 Voltage:** This is chassis battery voltage. Press the left or right arrows to view battery amp hours and minimum and maximum battery voltage.
- **Temperature Screen:** This displays the ambient temperature at the remote monitor.

Solar Panel Care

Keep the solar panel clean. The amount of power that a panel produces is directly related to the intensity of sunlight. A single layer of dust, road grime or other debris can greatly reduce power. Regular inspections and regular cleaning will assure maximum charging power. Use a non-abrasive cleaner and paper towels to clean the panel. The surrounding environment and the amount of road dust encountered will determine how frequently the panel should be cleaned.

- Solar panels should be cleaned monthly or more frequently depending upon weather conditions.
- The panel should be cleaned if a film or a layer of dust is on the windshield.
- High winds can blow dust and debris around causing dirt build up. Frequently inspect the panel and clean as necessary.

CAUTION:
To avoid arcing at the battery connections when replacing batteries or performing battery cable maintenance, be sure to remove the fuses for the solar panel charge controller, or cover the solar panel to stop the production of electricity.

LIGHTS

Light fixtures will vary depending on location. Shown are typical light fixtures. Actual styles and types may differ.

Interior Halogen

Changing the Bulb:

Removal:

- Grasp light fixture and pull down slightly then tilt fixture to one side. This will allow one spring clip to come out.

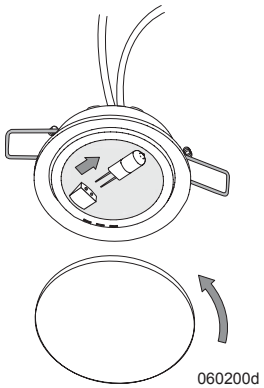

CAUTION:
Push spring clip inward with a finger as clip is being eased out. If this is not done spring clip can snap back on fingers.

- Tilt fixture to other side and ease the other spring clip out.
- Unscrew the light lens counterclockwise and remove.
- Carefully grasp bulb and pull from socket. Replace with the same type of bulb.

The bulb replacement is **12V 10W CE**.

INFORMATION:
Confirm replacement bulb number before ordering or obtaining a replacement.

- Use a clean cloth or piece of tissue to grasp new bulb. **Do not** touch bulb with fingers as oil can cause a “hot spot” and result in immediate bulb failure.
- Align contacts of bulb with terminals in fixture base. Insert bulb until contacts are firmly seated.

Reinstall:

- Align tabs on light lens with slots in fixture base. Rotate lens clockwise until light lens locks into place.
- Fold up both spring clips and insert light fixture into opening. Once in opening the spring clips will expand and lock light fixture into place.

CAUTION:
Do not touch halogen lighting while on. They can cause a burn. Do not touch replacement bulbs. Oil in the hands can cause a “hot-spot” to occur. If the bulb is touched, allow it to cool and clean the bulb with alcohol.

Incandescent Light

Incandescent lights, such as in the exterior compartment and interior of the motorhome, come in different styles or variations. The bulbs in the 12 Volt incandescent light fixtures are replaceable.

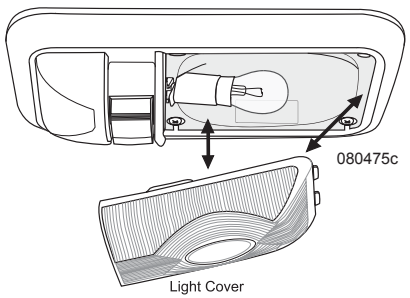

To Replace a Bulb:

- Carefully squeeze the lens cover then gently pull the cover out. The cover has tabs that lock the cover in place
- Using a clean cloth or piece of tissue carefully grasp the bulb and rotate to the unlock position.
- Remove bulb from the socket.
- The bulb replacement is 1141 12V 21CP.

INFORMATION:
Confirm replacement bulb number before ordering or obtaining a replacement.

- Using a clean cloth or piece of tissue grasp the new bulb and align the prongs on the bulb with the slot on light socket.
- Push bulb in and rotate to lock position.
- Gently squeeze lens cover and insert tabs on cover into fixture.

CAUTION:
Do not touch the incandescent bulbs while it is on. The bulb can be hot and cause a burn. Allow the bulb to cool down before replacing.

Map Light

Operation:
Turn the map light on by pressing the On/Off switch on the map light. The map light pivots left and right to allow illumination of different areas.

To Replace a Bulb:

- Carefully push in on the bulb and turn counterclockwise.
- Pull bulb from the socket. The bulb replacement is 1383 12V.
- Replace bulb. To re-install align the two pins on the bulb with the two channels on the socket. Insert the bulb and turn clockwise.

INFORMATION:
Confirm replacement bulb number before ordering or obtaining a replacement.

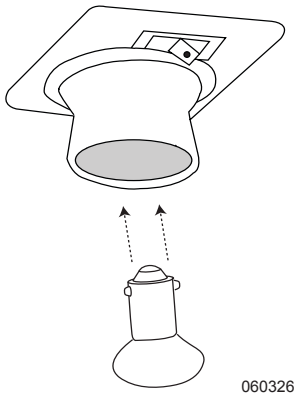

TYPICAL ELECTRICAL LAYOUT

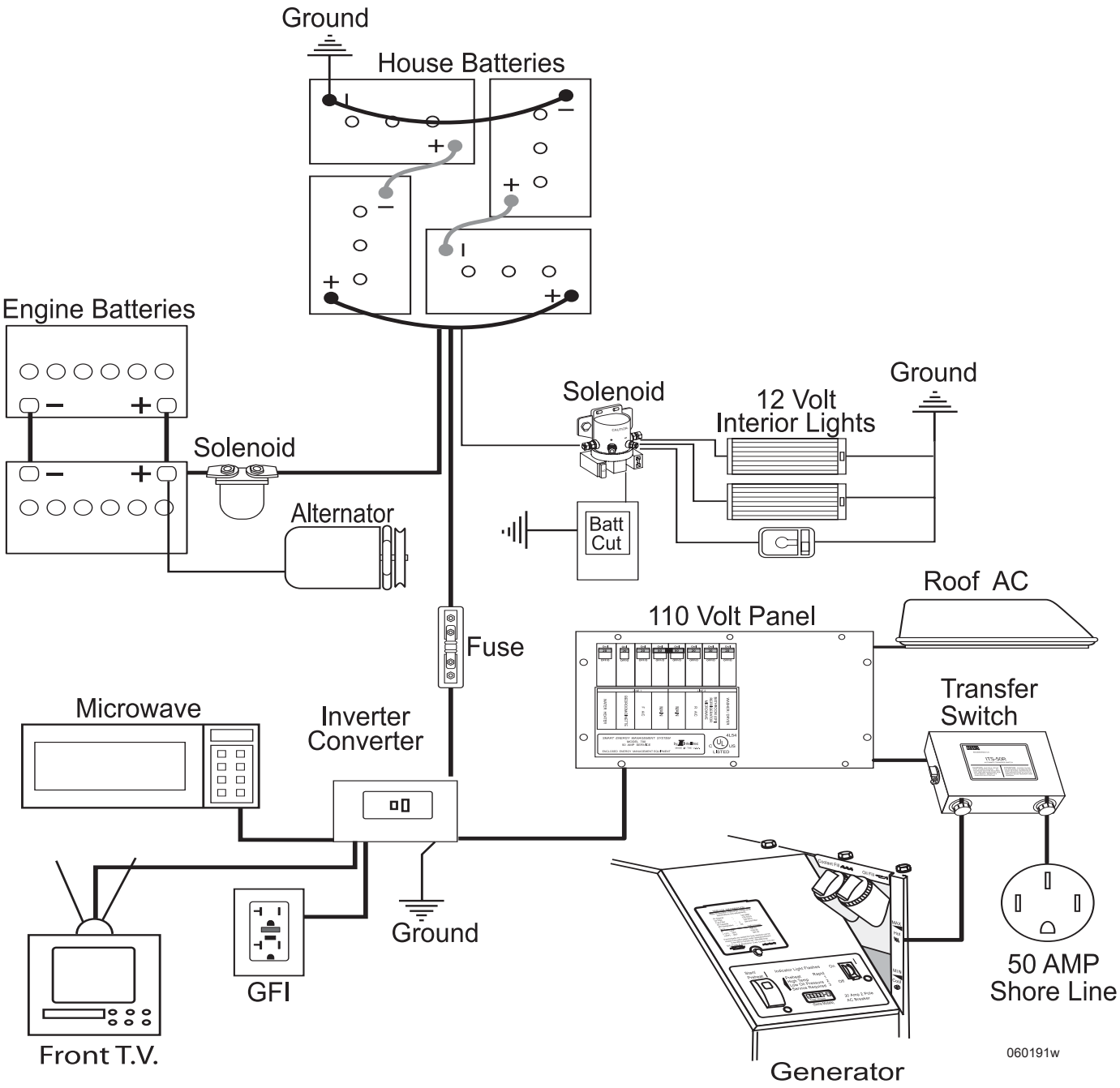

NOTES

Chassis Electrical

Section 9

CHASSIS ELECTRICAL - INTRODUCTION 190
BATTERY DISCONNECT 190
Chassis 190
BATTERY - CHASSIS 190
CHASSIS DISTRIBUTION PANELS 190
Front Electrical Panel 191
Rear Electrical Panels 194
BATTERY MAINTAINER 196
Relays 196
ALTERNATOR 197
Alternator Testing Procedure 197
STEERING WHEEL & COLUMN 198
Cruise Control 198
Tilt & Telescope 199
DASH 200
Instrument Panel 200
Indicator Lights 201
LCD Controller 202
LCD Display 202
Switches 202
AIR CONDITIONER & HEATER CONTROLS 205
Maintenance 206
Operating Tips & Hints 206
System Components 206
Troubleshooting 207
DIAGNOSTIC PLUG LOCATION 208
ENGINE “NO START” FLOW CHART 209

CHASSIS ELECTRICAL - INTRODUCTION

This section contains guidelines, procedures and information that will assist in understanding the chassis electrical system and the operation of various components. Refer to the OEM manuals included in the Owner's Information File box for their respective, in-depth, individual component operating instructions.

BATTERY DISCONNECT

Chassis

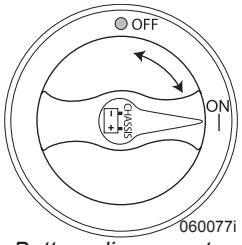

Battery disconnect: located on curbside rear electrical panel

The chassis battery disconnect switch controls DC power to the front electrical panel, front distribution box and rear distribution box. Most chassis and engine functions are interrupted when the chassis battery disconnect is turned off. Some electronic components of the engine and transmission require a constant power source and will continue to draw power when the disconnect is turned off.

Turn the chassis battery disconnect switch off when the motorhome is going to be stored or when performing electrical maintenance. If possible, leave the motorhome plugged into an AC source with the chassis battery disconnect switch on to help prevent the possibility of dead batteries.

If an AC source is not available and the motorhome is going to be stored more than 48 hours, it is recommended to turn the chassis battery disconnect switch off.

WARNING:
When welding is involved for motorhome repair or modification, only qualified, experienced technicians should weld on the chassis. Improper welding procedures and materials may weaken the assembly or result in damage that is not obvious and may not cause an immediate problem or failure. Unauthorized modifications or repairs to the chassis could result in a forfeiture of warranty coverage.

DANGER:
Due to the sensitive nature of the electronics on the chassis, the following precautions are required to protect electrical components in the motorhome chassis:

1. **Disconnect the (+) positive and (-) negative battery connections.**
2. **Cover electronic control components and wiring to protect from hot sparks.**
3. **Disconnect the terminal plugs from the engine Electronic Control Unit.**
4. **Disconnect all the plugs from the transmission Transmission Control Module located in the roadside front electrical bay.**
5. **Do not connect welding cables to electronic control components.**
6. **Attach the welding ground cable no more than two feet from the part to be welded.**

BATTERY - CHASSIS

The chassis battery is designed to produce high amperage necessary to start the engine. Maintain the chassis battery through regular electrolyte level inspections and hydrometer readings.

High electrolyte consumption or inconsistent hydrometer cell readings may indicate a charging system problem. Perform a charging system and current draw check if the battery is exhibiting abnormal hydrometer readings.

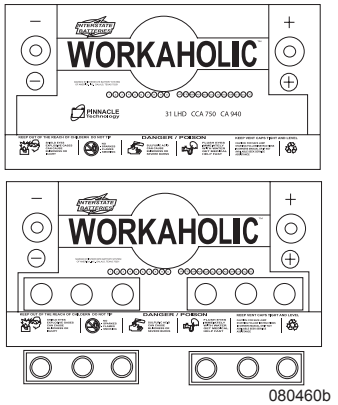

Battery with cover removed. Cut plastic to remove cover.

NOTE:
Replacement batteries should have the same cold cranking amp (CCA) rating.

CHASSIS DISTRIBUTION PANELS

The motorhome uses electrical distribution panels to service chassis and engine functions. Some house functions are also located on these panels. The front electrical panel (aka front run box) contains fuses, self-resetting and manually resetting supply circuit breakers, solenoid and relays for items such as headlights, radio, leveling etc. and house related functions. A rear electrical panel (aka rear run box) mainly controls engine functions.

Fuses are a standard plug-in type. Replace fuses using the same type and amperage rating. Using a fuse of a different rating will defeat the circuit protection provided by the fuse that could result in damage to the motorhome electrical system. A fault exists if a fuse blows continually. It is recommended a qualified RV service technician diagnose and repair the problem. Circuit assignments are identified by the fuse label located with the distribution panel.

Front Electrical Panel

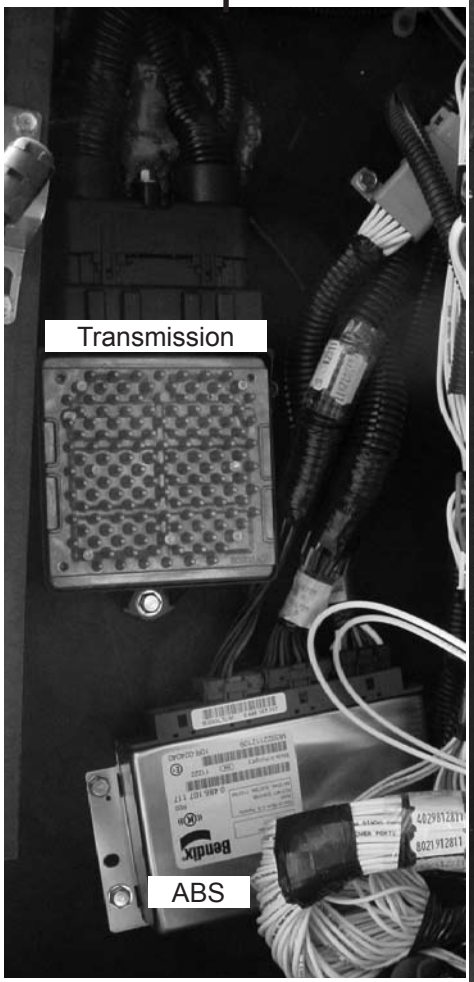

ABS & Transmission control modules

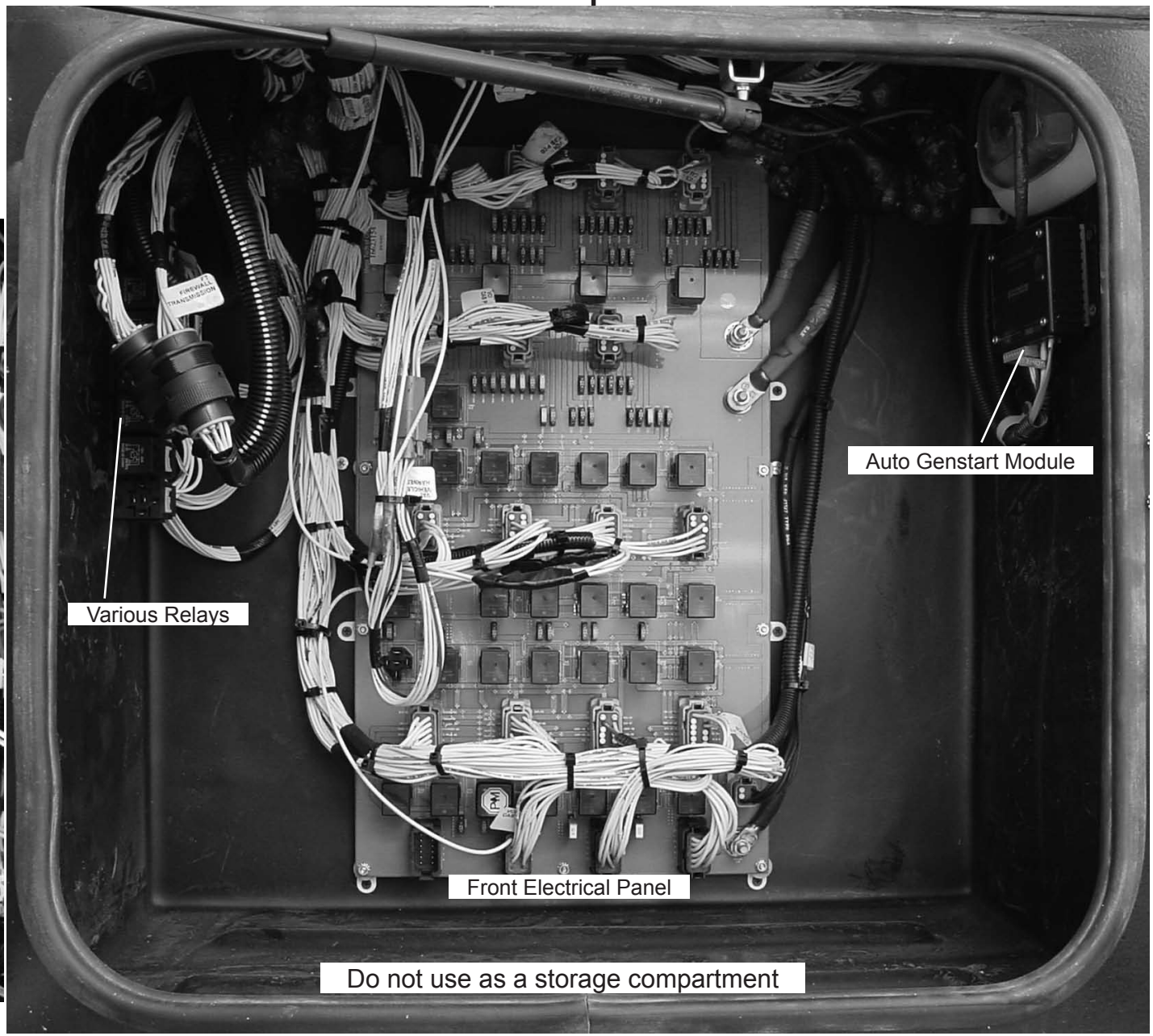

Front electrical panel

VCL - BROWN (FIREWALL HARNESS)

LOC No	FUNCTION	FROM
1	VCL1 BATT+ BRAKE SW	F28
2	VCL2 BATT+ SEC SYSTEM	F27
3	VCL3 BATT+ INSTRUMENTS	F26
4	VCL4 BATT+ NAV SYS	F25
5	VCL5-6 BATT+ HEADLIGHTS	F24
6	VCL5-6 BATT+ HEADLIGHTS	F24
7	VCL7-8 BATT+ STEP COVER	F3
8	VCL7-8 BATT+ STEP COVER	F3
9	VCL9 ACC+ RADIO, MONITOR	F2
10	VCL10 ACC+ POWER WINDOW*	F1
11	VCL11 ACC+	F23
12	VCL12 ACC+	F22

VCN - GREEN (FIREWALL HARNESS)

LOC No	FUNCTION	FROM
1	VCN1 IGN+ DRIVING LIGHTS	F33
2	VCN2 IGN+ OVERHEAD FAN	F32
3	VCN3 IGN+ INTSRUMENTS, FUEL SNDR	F31
4	VCN4 IGN+ DIAGNOSTICS PLUG, ALARM	F9
5	VCN5 IGN+ MIRROR HEAT *	F8
6	VCN6 IGN+	F7
7	VCN7 IGN+ PREHEAT *	F6
8	VCN8 IGN+ VIP CONTROLLER *	F5
9	VCN9 IGN+ SHIFT CONSOLE	F4
10	VCN10 IGN+ DASH SPARE	F30
11	VCN11-12 IGN+ CAB A/C	F29
12	VCN11-12 IGN+ CAB A/C	F29

VCO - BROWN (FIREWALL HARNESS)

LOC No	FUNCTION	FROM
1	VCO1 IGN+ ENGINE ECM	F37
2	VCO2 IGN+ TRANSMISSION TCM	F36
3	VCO3 IGN+ ABS ECU	F35
4	VCO4 IGN+ ENGINE SUB-SYSTEMS	F15
5	VCO5 IGN+ REAR DC BOX	F14
6	VCO6 IGN+ WINDSHIELD WIPER	F13
7	VCO7 IGN+ VGT/VNT	F12
8	VCO8 IGN+ TRAILER CHARGE	F11
9	VCO9 IGN+ AUX BRAKE CONTRLR *	F10
10		
11	VCO11-12 IGN+	F34
12	VCO11-12 IGN+	F34

VCM - GRAY (FIREWALL HARNESS)

LOC No	FUNCTION	FROM
1	VCM1 HSE BATT+ DSH RADIO, BOOST	F41
2	VCM2 HSE BATT+ AUTO GEN START *	F40
3	VCM3 HSE BATT+ TANK HEATERS *	F39
4	VCM4 HSE BATT+ BSMNT RADIO *	F38
5	VCM5 CHAS BATT+ CB RADIO *	F20
6	VCM6 CHAS BATT+	F19
7	VCM7 CHAS BATT+	F18
8	VCM8 RELAY RL4 NC OUTPUT +12	F17
9	VCM9 IGN+ SLIDE OUT LOCK OUT	F16
10	VCM10 IGN+	F21
11	GROUND- AUTO GEN START*	GROUND
12	GROUND- TANK HEATERS*	GROUND

VCI - GREEN (LEVELER HARNESS)

LOC No	FUNCTION	TO/FROM
1	GND FRNT/REAR AIR *	GROUND
2	GND CONT FR HYD *	GROUND
3	AD86 JACKS DOWN *	TO RL5-86
4	PGR87 GEAR IN NEUTRAL	FROM RL6-87/F73
5	SWPB PARK BRAKE	FROM VCH-10
6	TCM25 SPEEDOMETER *	FROM VCH-9
7	VCI-7 BATT+ CONTROLLER *	F46
8	VCI-8 BATT+ FRNT AIR *	F45
9	VCI-9 BATT+ FRNT HYD *	F42
10	VCI-10 BATT+ REAR AIR *	F43
11	VCI-11 IGN+ *	F44
12	GND LEVELER SPEEDO COM *	GROUND

VCK - GREEN (FRONT CAP HARNESS)

LOC No	FUNCTION	FROM
1	VCK1 BATT+ PSNGR PNL	F62
2	VCK2-3 BATT+ STEP	F61
3	VCK2-3 BATT+ STEP	F61
4	VCK4 BATT+ DT RUN LT MOD	F52
5	VCK5 BATT+ MIR ADJ, RDNG LT	F51
6	VCK6 BATT+ AIR COMP *	F50
7	VCK7-8 IGN+ SPARE	F49
8	VCK7-8 IGN+ SPARE	F49
9	VCK9 IGN+ STEP	F60
10	VCK10 IGN+ VACUUM PUMP	F48
11	VCK11 IGN+ WIPER	F47
12	VCK12 IGN+ DTRLM, STEP OUT WARN	F59

VCJ - BROWN (FIREWALL HARNESS)

LOC No	FUNCTION	FROM
1	VCJ1 BATT+ AUX BRAKE CONTRLR *	F68
2	VCJ2 BATT+ DSH POWER PORTS	F67
3	VCJ3 BATT+ PARKING LTS	F66
4	VCJ4 BATT+ VIP CONTROLLER *	F58
5	VCJ5 BATT+ SHIFTER CONSOLE	F57
6	VCJ6 BATT+ DASH SPARE	F56
7	VCJ7 BATT+	F55
8	VCJ8 BATT+ DASH SW GRP #1 *	F54
9	VCJ9 BATT+ ABS	F53
10	VCJ10 BATT+	F65
11	VCJ11 BATT+ ABS	F64
12	VCJ12 BATT+ ABS	F63

VCH - GRAY (FIREWALL HARNESS)

LOC No	FUNCTION	TO/FROM
1		
2		
3	TCM45 RANGE INDICATOR	TO RL8 RL9 RL6-85
4	ECM TRANS NEUTRAL *	FROM RL8-87/F72
5	TCM65 REVERSE	TO RL14-85
6	RLRR87 REVERSE	FROM RL14-87/F77
7	ISI IGNITION SW OUT	FROM IGN SWX
8	ISA ACCESSORY SW OUT	FROM IGN SWX
9	TCM25 SPEEDOMETER	TO VCI-6
10	SWPB PARK BRAKE	TO VCI-5
11	SWAD3 AIR DUMP SW OUT	TO RL7-30
12		

VCE - GRAY (FIREWALL HARNESS)

LOC No	FUNCTION	TO/FROM
1	DO NOT USE	FROM RL11-30/F69
2	BRAKE LIGHTS *	FROM RL16, RL19-87/F81
3	AM5 PARKING LIGHT FLASH *	TO RL13-86
4	PARK LIGHTS OUT *	FROM RL13-87/F70
5	SWTSA LEFT TURN	TO VCF-9/VCG-9
6	SWTSB RIGHT TURN	TO VCF-10/VCG-10
7	DO NOT USE	TO RL15-85
8	DO NOT USE	TO RL15-86
9		
10	PARKING LIGHT DISCRETE	TO RL13-86
11	AM6 PORCH LIGHT	TO RL12-85
12	DO NOT USE	TO RL11-86

VCF - GREEN (FRONT CAP HARNESS)

LOC No	FUNCTION	TO/FROM
1	RLPL30 PORCH LIGHT	FROM RL12-30
2	SWPL3 PORCH LIGHT SW OUT	TO RL12-87A
3	VCS9 GND A/C TRIN SW	TO RL17-85
4	PST TRINARY SW CLUTCH OUT	TO RL17-86
5	PLR87 PARKING LIGHTS	FROM RL13-87/F70
6	CFR30 COND FAN *	FROM RL17-30/F83
7	CFR30 COND FAN *	FROM RL17-30/F83
8		
9	SWTSA LEFT TURN	FROM VCE-5
10	SWTSB RIGHT TURN	FROM VCE-6
11	DSR87 DOOR SEAL	FROM RL9-87A/F74
12	625 PORCH LIGHT POWER	TO RL12-86-87

VCG - BROWN (AUX CHASSIS HARN)

LOC No	FUNCTION	TO/FROM
1		
2	VCG2 AIR DUMP *	FROM RL7-87A, RL5-87A/F71
3	DO NOT USE	FROM RL15-87/F79
4	BRAKE LIGHTS	FROM RL16, RL19-87/F81
5	PLR87 PARKING LIGHTS	FROM RL13-87/F70
6	RLRR87 REVERSE	FROM RL14-87/F77
7		
8		
9	SWTSA LEFT TURN	FROM VCE-5
10	SWTSB RIGHT TURN	FROM VCE-6
11		
12		

VCC - BROWN (FRONT CAP HARNESS)

LOC No	FUNCTION	TO/FROM
1	SWHLHI HIGH BEAM	FROM VCB-12
2	SWHLLO LOW BEAM	FROM VCB-11
3	LADR30 LOCK ENTRY DOOR	FROM RL31-30/F87
4	RLVD86 PASS VISOR DOWN	TO RL28-86, VCB-9
5	RLVU86 PASS VISOR UP	TO RL27-86, VCB-8
6	UNUSED	TO VCB-7
7	UEDR30 UNLOCK ENTRY DOOR	FROM RL30-30/F87
8	RLVU30 PASS VISOR UP	FROM RL27-30/F85
9	RLVD30 PASS VISOR DOWN	FROM RL28-30/F85
10	RLH87 HORN RELAY OUT	FROM RL21-87/F78
11		
12	RLBL85 BAY LIGHT SW IN	TO RL24-85

VCB - GREEN (FIREWALL HARNESS)

LOC No	FUNCTION	TO/FROM
1	SWDL3 DOCKING LTS *	TO RL23-85
2	SWED DOOR SW	FROM VCA-11
3	AM9 UNLOCK BAY DOORS *	TO RL22-85
4	AM7 LOCK ALL DOORS	TO RL31-85
5	AM8 UNLOCK ENTRY DOOR	TO RL30-85
6	VCB6 FLASHER OUTPUT	FROM RL29/F86
7		
8	RLVU86 PASS VISOR UP	TO RL27-86
9	RLVD86 PASS VISOR DO	TO RL28-86
10	HR85 HORN RELAY	TO RL21-85
11	SWHLLO LOW BEAM	TO VCC-2
12	SWHLHI HEAD BEAM	TO VCC-1

VCA - GRAY (SUB FLOOR CHAS HARN)

LOC No	FUNCTION	TO/FROM
1		
2	BLR87 (YEL) BAY LIGHTS	FROM RL24-87/F82
3	DLR87 (YEL) DOCKING LTS *	FROM RL23-87/F80
4	UBDR30 (GRN) DOOR UNLOCK	FROM RL22-30/F87
5	LADR30 (BLU) DOOR LOCK	FROM RL31-30/F87
6	VCA6-7 (RED) CHAS BATT SEAT	F88
7	VCA6-7 (RED) CHAS BATT SEAT	F88
8	LADR30 (BLU) DOOR LOCK	FROM RL31-30/F87
9	UBDR30 (GRN) DOOR UNLOCK	FROM RL22-30/F87
10		
11	SWED (GRN) DOOR SW	TO VCB-2
12		

VCD - GRAY (FIREWALL HARNESS)

LOC No	FUNCTION	TO/FROM
1	SWBR BRAKES SW OUT	TO RL25-86
2	TCM62 SERVICE BRAKE STATUS	FROM RL25-30
3	TCM3 SIGNAL RETURN	TO RL25-87
4	SWC31 CANCEL CRUISE CONT *	TO RL33-86
5	ECM COMMON	TO RL33-30
6	ECM SERVICE BRAKE	FROM RL33-87A
7	SWC38 CRUISE ON *	TO RL32-86
8	ECM COMMON *	TO RL32-30
9	ECM CRUISE ON/OFF *	FROM RL32-87
10	RLEB87 EXH BRAKE SOL *	FROM RL18-87/F84
11	ECM ENGINE BRAKE ACTIVE	TO RL16-86, RL18-86
12	RLTB87 BRAKE/TURN OUT	FROM RL26-87/F81

* INDICATES EQUIPMENT OPTIONS USED ON SOME MODELS

VCT - GRAY (SUB FLOOR CHAS HARN)

LOC No	FUNCTION	FROM
1	GROUND	GROUND BUS
2	GROUND	GROUND BUS
3	GROUND	GROUND BUS
4	GROUND	GROUND BUS
5	GROUND	GROUND BUS
6	GROUND	GROUND BUS

VCP - BLACK (SPARE)

LOC No	FUNCTION	FROM
1	GROUND	GROUND BUS
2	GROUND	GROUND BUS
3	GROUND	GROUND BUS
4	GROUND	GROUND BUS
5	GROUND	GROUND BUS
6	GROUND	GROUND BUS
7	GROUND	GROUND BUS
8	GROUND	GROUND BUS
9	GROUND	GROUND BUS
10	GROUND	GROUND BUS
11	GROUND	GROUND BUS
12	GROUND	GROUND BUS

VCQ - BLACK (FIREWALL HARNESS)

LOC No	FUNCTION	FROM
1	GROUND	GROUND BUS
2	GROUND	GROUND BUS
3	GROUND	GROUND BUS
4	GROUND	GROUND BUS
5	GROUND	GROUND BUS
6	GROUND	GROUND BUS
7	GROUND	GROUND BUS
8	GROUND	GROUND BUS
9	GROUND	GROUND BUS
10	GROUND	GROUND BUS
11	GROUND	GROUND BUS
12	GROUND	GROUND BUS

VCR - BLACK (FIREWALL HARNESS)

LOC No	FUNCTION	FROM
1	GROUND	GROUND BUS
2	GROUND	GROUND BUS
3	GROUND	GROUND BUS
4	GROUND	GROUND BUS
5	GROUND	GROUND BUS
6	GROUND	GROUND BUS
7	GROUND	GROUND BUS
8	GROUND	GROUND BUS
9	GROUND	GROUND BUS
10	GROUND	GROUND BUS
11	GROUND	GROUND BUS
12	GROUND	GROUND BUS

VCS - BLACK (FRONT CAP HARNESS)

LOC No	FUNCTION	FROM
1	GROUND	GROUND BUS
2	GROUND	GROUND BUS
3	GROUND	GROUND BUS
4	GROUND	GROUND BUS
5	GROUND	GROUND BUS
6	GROUND	GROUND BUS
7	GROUND	GROUND BUS
8	GROUND	GROUND BUS
9	GROUND	GROUND BUS
10	GROUND	GROUND BUS
11	GROUND	GROUND BUS
12	GROUND	GROUND BUS

Front electrical panel circuit assignments

100221c

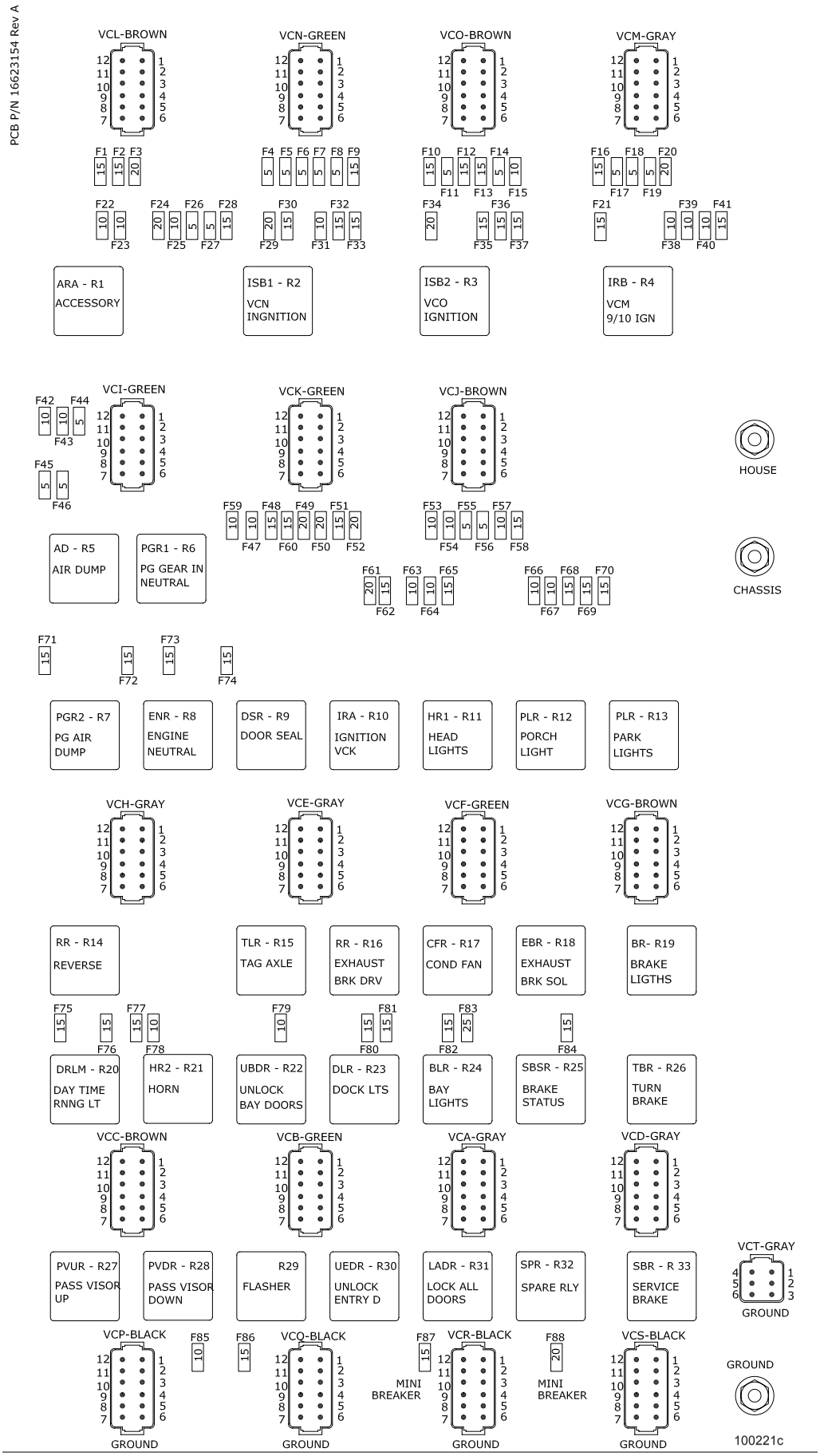

Front electrical panel layout

Rear Electrical Panels

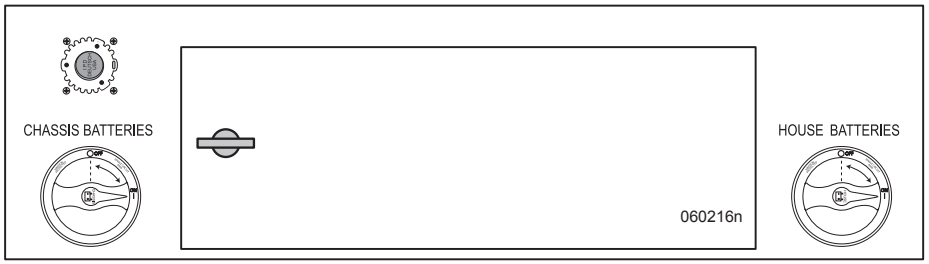

Rear electrical panel for 36 & 43”

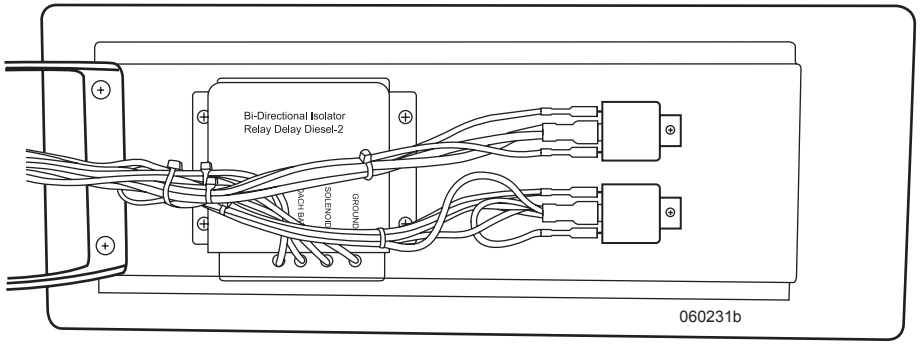

Located on door

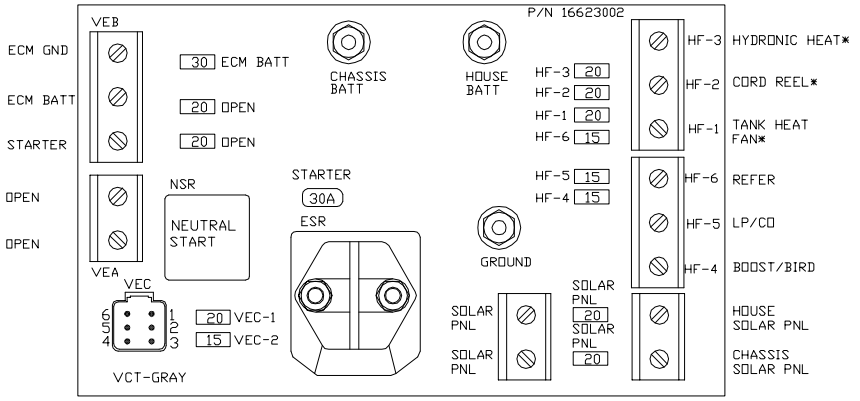

LAY-OUT

* INDICATES EQUIPMENT OPTIONS USED ON SOME MODELS

VEC - CONNECTOR

LOC No	FUNCTION	FROM
1	VEC-1 IGN SW POWER	20 A FUSE
2	VEC-2 BATT TRANSMISSION	15 A FUSE
3	GROUND TRANSMISSION	GND
4	TCM41 NEUTRAL START	NSR86
5	ISS ENGINE START	NSR30
6		

P/N 03215174 Rev B

Rear electrical panel circuit assignments

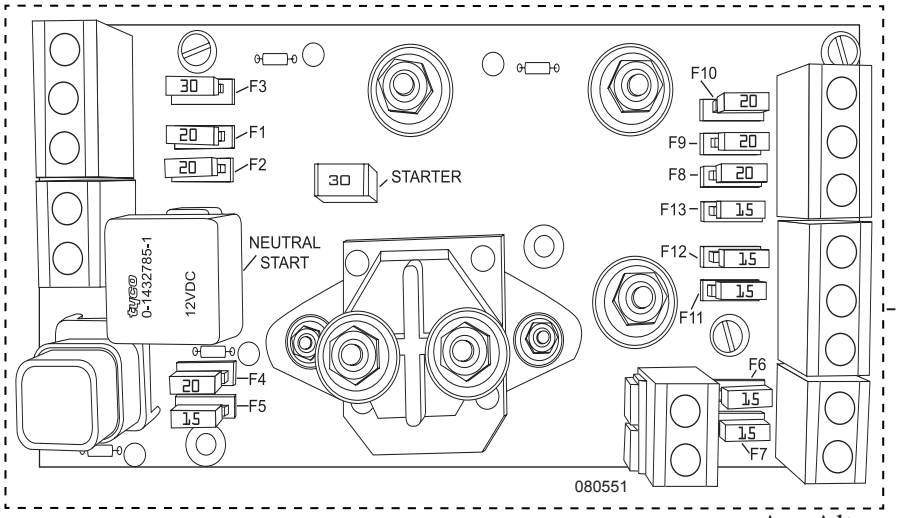

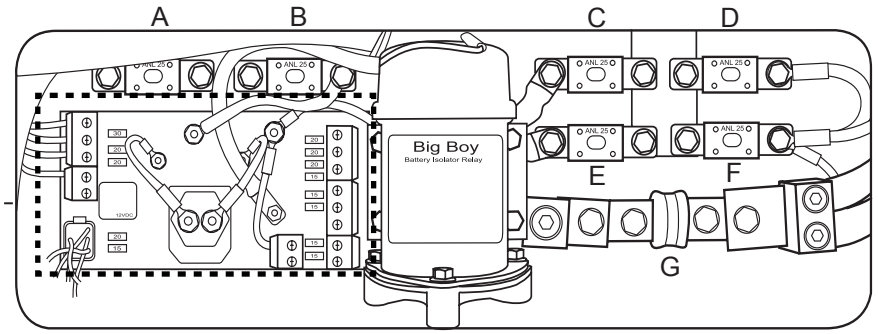

36’ rear electrical panel.

NOTE:
Components and location of components will change with options or changes to the motorhome.

A = Alternator 200Amp
B = Front Elect Panel.....200Amp
C = Hyd Level.....200Amp
D = Generator 125Amp
E = Front Elect Panel 60Amp
F = House Fuse Panel 125Amp
G = Inverter.....300Amp

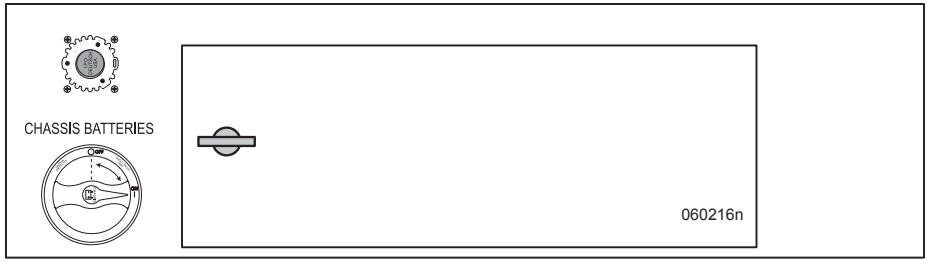

Rear electrical panel for 40'

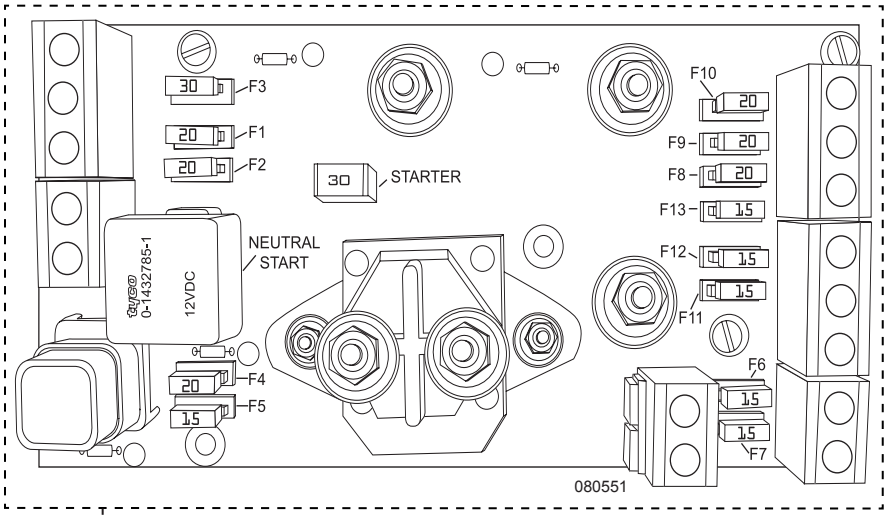

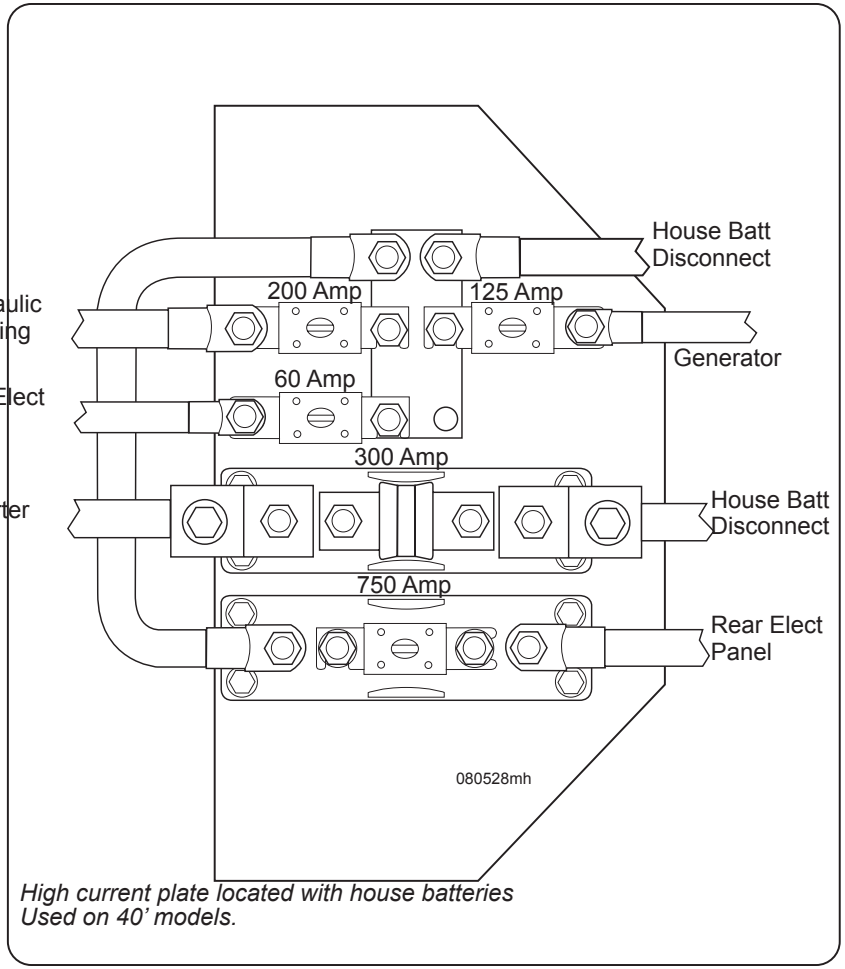

High current plate located with house batteries
Used on 40' models.

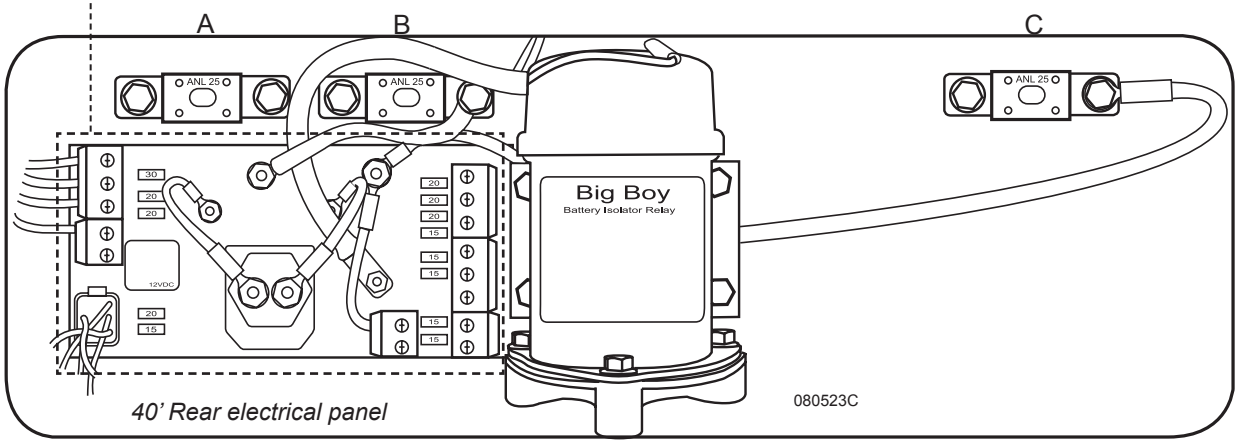

40' Rear electrical panel

A = Alternator 200Amp
B = Front Elect Panel .....200 Amp
C = House Fuse Panel.....125Amp

NOTE:
Components and location of components will change with options or changes to the motorhome.

BATTERY MAINTAINER

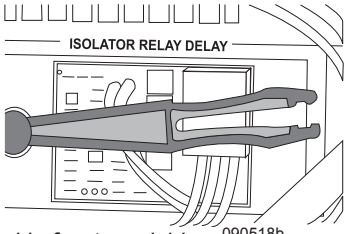

Located in front roadside electrical panel

The Battery Maintainer (Bi-Directional Isolator Relay Delay) constantly senses voltage of the house and chassis batteries.

With engine running, both the house and chassis batteries are charged from the engine alternator. When the motorhome is plugged into shore power or operating from the generator, both the house and chassis batteries are charged from the inverter. If neither battery is being charged, the batteries are fully isolated.

The battery maintainer also senses heavy loads on either battery to prevent the wrong battery from being inadvertently discharged.

Relays

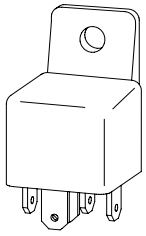

The motorhome uses various relays to operate electrical equipment, such as lights and motors. If a relay needs to be replaced, carefully record the location of each wire and all markings or labels.

Relays can look the same in appearance, but differ in function. Located on the side of the relay is a schematic identifying the relay as a Number 87 or 87A. The two relay types differ in function and if mixed, will create problems.

Ensure the replacement relay is of the same type and current rating to assure proper operation.

Relay Post Identification:

1. The 30 post is generally the supply from a fuse or circuit. Some applications use the 30 post for ground. The 30 post can be used different ways.
2. The 85 post is one side of the coil, tripped different ways.
3. The 86 post is the opposite side of the coil, tripped different ways.
4. The 87 posts on a Number 87 relay are not common to the 30 post until the relay coil is tripped.
5. The 87A posts on a Number 87A relay, are common to the 30 post at rest (Normally Closed). When the coil is tripped, the 87a post becomes inactive and the 30 post becomes common with the 87 post.

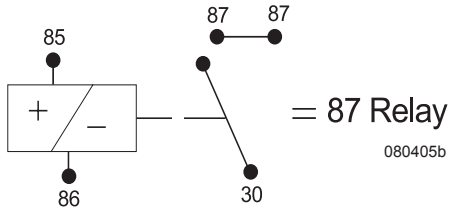

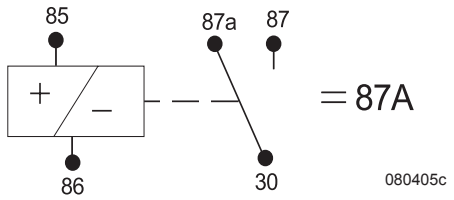

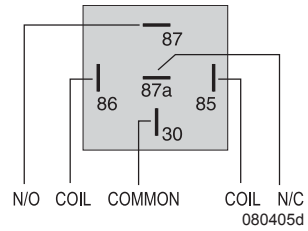

Single Pole Single Throw Relay.

A Single Pole Single Throw relay (SPST) is an electromagnetic switch consisting of a coil (terminals 85 & 86), one common terminal (30), one normally closed terminal (87a), and one normally open terminal (87).

When the coil of the relay is at rest (not energized) the common terminal (30) and the normally closed terminal (87a) have continuity. When the coil is energized, the common terminal (30) and the normally open terminal (87) have continuity.

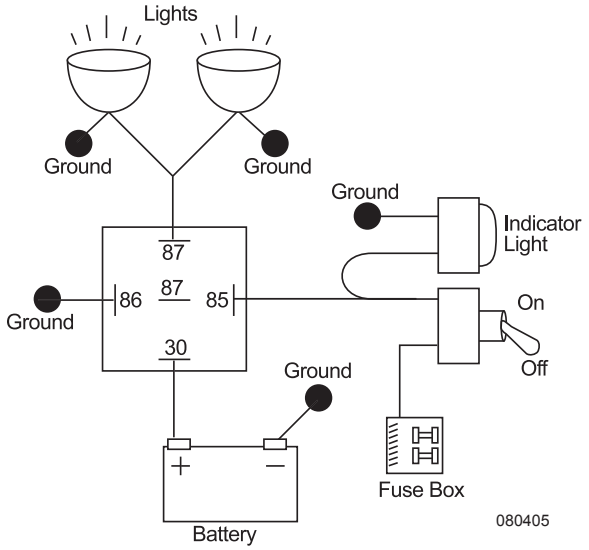

NOTE:
When there is power applied to the coil, the coil sets up a magnetic field in the windings. When the power is removed, the field collapses. A momentary high voltage discharge will occur. This is how an ignition coil works.

ALTERNATOR

The function of the alternator is to maintain electrical system voltage. It is not designed as a battery charger. When the engine is operating, the alternator maintains electrical system voltage relative to a load, such as headlights and windshield wipers. When a heavy load is placed on the alternator, such as trying to charge dead house batteries, the operating temperature of the alternator will increase. Excess operating temperature of the alternator for extended periods can lead to premature failure of the alternator.

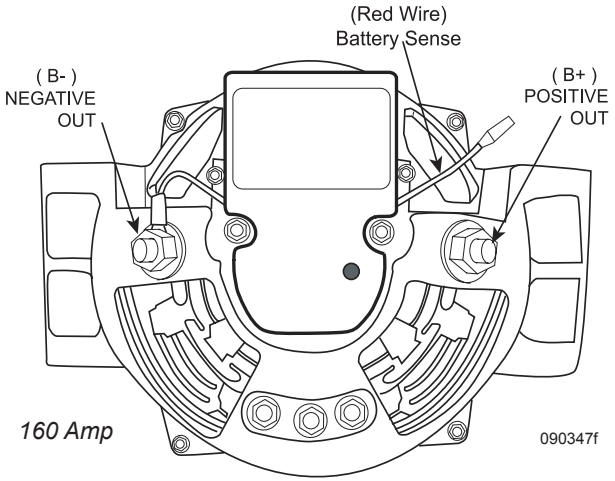

The alternator replaces amp hours the chassis battery used to start the engine. The amount of charge the alternator sends to the chassis battery is dependent on the amount of time the engine is operated. Repeatedly starting the engine for short periods may not be enough operating time to adequately replace the amp hours the chassis battery uses to start the engine.

When traveling, keep an eye on the voltmeter in the dash area. Normal readings should be between 13 to 14.5 Volts DC. Voltage indications higher or lower indicate a potential problem with the charging system. If the alternator output drops below an acceptable level, a charge indication warning lamp will illuminate.

NOTE:
The alternator is not designed to charge the house batteries from a complete discharge to a full state of charge. The alternator will maintain battery charge during travel, supplying the DC current necessary to operate running lights or other DC loads.

If the house batteries are in a low state of charge, it is recommended to charge the house batteries with the inverter or an auxiliary battery charger before driving the motorhome.

CAUTION:
Long-term use of the inverter to operate the microwave while in transit will damage the alternator. Use the generator to operate the microwave while in transit.

Alternator Testing Procedure

Alternator Testing:

- Check all wiring for burnt or loose electrical connections. Repair as needed.
- Check all grounds and electrical connections to confirm they are clean and tight.
  - Alternator ground to chassis frame.
  - Motor block ground to chassis frame.
  - Chassis battery ground to chassis frame.
  - Alternator positive output to isolator relay terminal.
- Inspect the alternator for damage.
- Check belt, pulley and fan for wear. Replace as needed.
- **Do not** disconnect the battery or battery wire from the alternator with the engine running as this can damage the alternator or regulator.
- The pulley for the alternator should be torqued to 80 ft. lbs.
- Chassis battery voltage with the engine off should range from 12.2 to 12.7 Volt DC.
- Chassis battery voltage with the engine at idle should range 13.5 to 14.2 Volts DC.
- The output of the alternator range is 13.6 to 15.4 Volts DC. Connect a volt meter to the (B+) terminal of the alternator and chassis ground. Idle the engine up to 1200 RPM.
- Connect a clamp-on amp-meter, if available, to the positive battery cable to verify the battery state/rate of charge.

CAUTION:
The alternator is not a battery charger. The alternator is designed to maintain proper electrical system voltage. A battery with a low state of charge, or a dead battery, may overheat and damage the alternator.

STEERING WHEEL & COLUMN

The steering wheel features cruise control, headlight and engine brake controls as well as paddle switches for basic operation of the dash radio.



NOTE:
See Section 5 Dash Radio for paddle switch operation.

Horn:

Press center of steering wheel to sound the horn.

Headlamp Flash:

- With the headlamps off, pressing the switch will turn the headlamps on as long as the switch is pressed.
- With the headlamps on, pressing the switch will turn the headlamps off but marker lights and taillights remain illuminated.
- If equipped with Daytime Running Lights (Transport Canada requirement), the headlamps will illuminate full brightness when the switch is pressed. With the headlamps on, pressing the switch will dim headlamps to 80% brightness of low beam.

Cruise Control

Cruise On/Off: Turns cruise control power On or Off. The Cruise On/Off indicator will illuminate when cruise power is enabled.

WARNING:
Cruise control is not designed to replace driver attentiveness. While cruise control can be used as an aid in driving, it is not a substitute for safe driving practices and driver alertness and awareness.

Cruise Set/Res:

Cruise Set sets and maintains road speed.

To Set Cruise Control Speed:

1. Accelerate to desired speed.
2. Turn cruise control power On.
3. Press the Set switch. This will set cruise control and maintain road speed automatically.

Road speed may vary by one or two miles an hour (depending on terrain) when cruise control is enabled. Cruise speed can be increased or decreased one or two mph by momentarily pressing Res to increase or Set to decrease road speed. Pressing and holding Res will gradually increase road speed. When the desired speed has been obtained, release the switch. This speed will be the new set cruise speed.

Pressing and holding Set will slowly decrease road speed. Release the Set switch when the desired road speed has been obtained. Cruise Res returns vehicle speed to previously set cruise speed after a brake application or cruise cancel has been pressed.

To Cancel Cruise Control:

- Step on the brake.
- Press the cruise cancel button.
- Turn cruise control power off.

To return to the previously set cruise speed, momentarily press Res. Cruise speed in memory is deleted when cruise control power is turned off. Follow steps 1 through 3 above to reengage cruise control.

WARNING:
For safety purposes, Do not engage cruise control in heavy traffic or on roads that are winding, slippery or unpaved. Do not shift the transmission into "N" (Neutral) with the cruise control engaged. Engine speed may dramatically increase until cruise control is cancelled or turned off.

NOTE:
The transmission shift schedule is automatically adjusted when Cruise power is enabled to limit unnecessary downshifts. Turn off Cruise power in congested traffic and mountainous terrain.

NOTE:
The transmission will not shift into gear if engine speed is at or above 900 RPM. The shift display (Monitor side) will flash "6" indicating engine speed is excessive. Lower the engine speed to allow the transmission to shift into gear.

To Use High Idle Feature:

1. Turn Cruise switch on.
2. Press Set or Res. Engine speed will rise to 1200 RPM.
3. Step on the brake, press cruise cancel or turn off cruise control power.

Marker Flash:



- Pressing Marker Flash causes the taillights and all marker lights to momentarily illuminate with the headlights off.
- Pressing Marker Flash with the headlights on will cause all marker lights and taillights to go off.

Engine Brake:

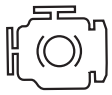

- Activates the engine brake. The engine brake will engage when the throttle is released. Press Cancel to disable the engine brake. See ***"Engine Brake"*** section 10 for more information.

Tilt & Telescope

To Tilt or Telescope:

- Move brake lever to the Unlock position.
- Adjust steering column up or down, fore or aft to the desired position.
- Move brake lever to the Lock position.

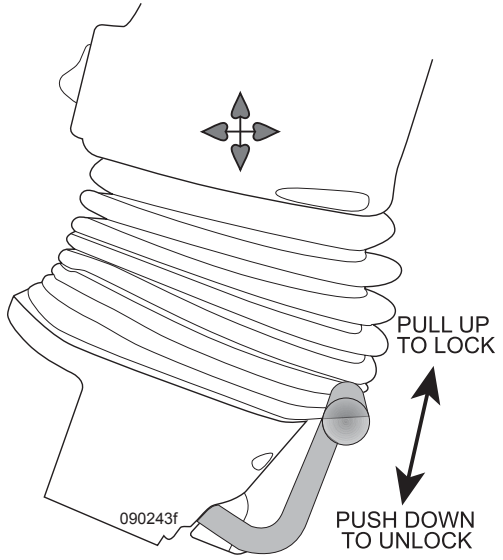

Adjust tilt & telescope

Turn Signal Lever:

The turn signal lever is located on the steering column. The ignition must be on for the turn signals to operate.

- Push the lever forward to activate right turn indicator.
- Pull the lever back to activate left turn indicator.

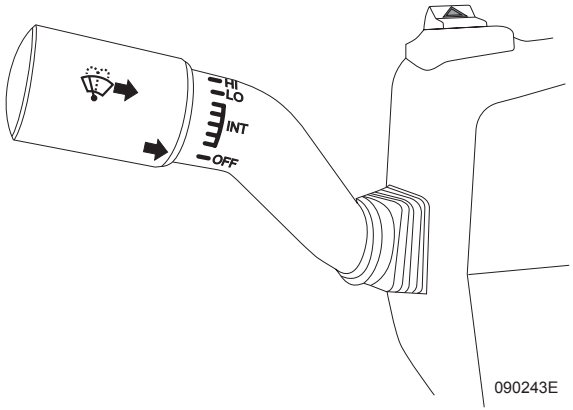

NOTE:
A turn signal minder is activated with turn signal operation. Applying the brake cancels the turn signal minder.

Headlight High/Low Beam:

- Pull the turn signal lever up to select between high or low beam when the headlights are on.

Windshield Wipers:

- Off:
- Cancels all wiper operations. Wiper function is also cancelled when the ignition is turned off.

- Intermittent:
- Use one of the settings to increase or decrease wipe interval timing. Rotating the knob towards Lo will decrease time between wipe intervals.

- Lo:
- Operates the wipers at low speed.

- Hi:
- Operates the wipers on high speed.

- Wiper Wash:
- Operates the windshield wash function. The wipers will activate as long as the wash function is operated. When the wash function is stopped, the wipers will make 2 or 3 additional passes to clear the wash fluid from the windshield.

Hazard Flashers:

The hazard flasher switch is located on the steering column. Press the switch to turn on the hazard flashers.

DASH
Instrument Panel

NOTE:
Some items depicted may not be used.

1. Fuel: Indicates approximate fuel remaining with ignition switch in the on position.

NOTE:
Fuel mileage varies with driving style and road conditions. Average more than one tank of fuel when calculating miles per gallon. The diesel generator uses fuel from main tank and will affect fuel mileage calculations. The diesel generator will not operate below ¼ tank to ensure sufficient fuel to run the engine.

2. Trans Temp: Shows approximate temperature of the transmission fluid. Do not let the transmission oil temperature exceed OEM specifications. If excess temperature is indicated, stop the motorhome and shift to neutral. Accelerate the engine between 1200 and 1500 RPM to allow transmission temperature to return to normal.

3. Oil Pressure: Indicates oil pressure not the amount of oil in the engine. Refer to the OEM engine manual for specific pressure recommendations.

WARNING:
If oil pressure drops and the Check Engine icon (Warning Triangle) illuminates, immediately shut off the engine and check oil level.

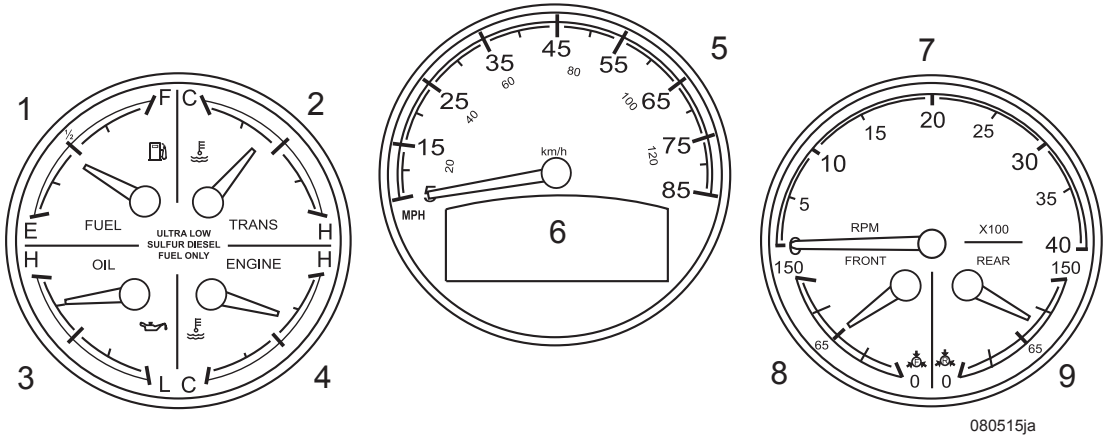

NOTE:
Oil pressure will be higher due to increased viscosity (thickness) of the oil when the engine is cold.

4. Coolant Temp: Indicates an approximate normal operating range. Monitor this gauge frequently when ascending grades, towing or in high ambient temperatures. If the needle indicates an out of range condition, take immediate action to avoid engine damage. Refer to the OEM engine manual for specific temperature recommendations.

5. Speedometer: Indicates road speed. The gauge indicates MPH and KPH.

6. Odometer: Displays total mileage.

7. Tachometer: Displays engine speed in revolutions per minute (RPM).

8./9. Air Pressure Gauge: Uses two needles to indicate air system pressures. One needle indicates air pressure of the front air tank. The other needle indicates air pressure of the rear air tank. The normal air system operating pressures are 110 to 135 psi. These air pressures are preset at the factory. If a problem occurs with either air system not maintaining normal operating pressure, it is an indication of a malfunction in the air system. Use caution and stop the motorhome in a safe area. Contact a qualified technician immediately.

Indicator Lights

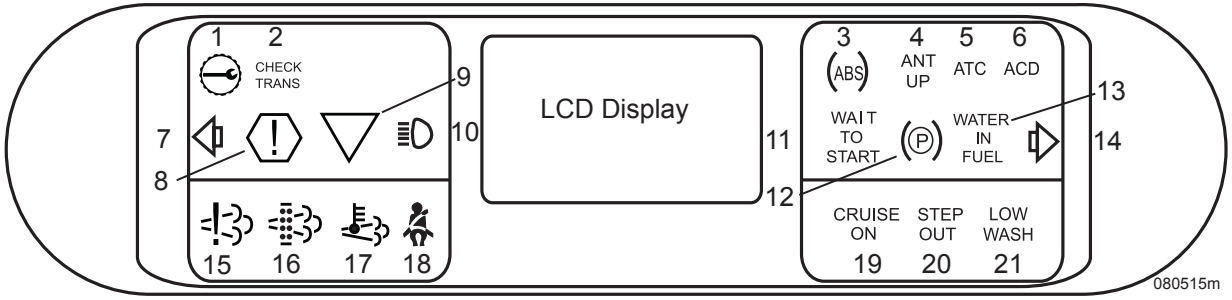

1. **Transmission Prognostics:** Indicates transmission service is due: See ***Transmission Section 10*** for further information.
2. **Check Trans:** Alerts of problems related to the transmission. See ***Transmission in Section 10*** for further information.
3. **ABS:** Indicates a fault in the Anti-lock Brake (ABS) system. Normal service braking is not affected.
4. **Ant Up:** N/A
5. **ATC:** Indicates the Automatic Traction Control (ATC) switch is activated or automatic traction control has enabled due to an ATC event.
6. **ACD:** N/A
7. **Left Turn:** Left turn indicator: Audible turn signal minder cancels when the brake is applied.
8. **Stop Engine (Hexagon):** A severe out of range condition exists within the engine protection circuits. Shut off the engine to avoid serious engine damage. Illuminates when coolant temperature is excessive, low oil pressure or the Diesel Particulate Filter (DPF) is clogged. Refer to OEM engine manual for further information.
9. **Check Engine (Warning Triangle):** Out of range condition exists within the engine protection circuits. Check water temperature, oil pressure or water in fuel is detected. A diagnostic trouble code is also logged. Refer to the OEM engine manual for further information.
10. **Headlight Beam:** Turns on when high beams are active.
11. **Wait To Start:** Monitors the air intake heater at engine start up. Wait for the lamp to cycle off before cranking the engine.
12. **Park Brake:** Parking/emergency brake is applied.
13. **Water in Fuel:** Water is detected in the secondary fuel filter.
14. **Right Turn:** Right turn indicator: Audible turn signal minder cancels when the brake is applied.
15. **Malfunction Indicator Lamp (MIL):** A malfunction has occurred within the emission system. The emission system will need to be repaired before continued operation. See "Diesel Particulate Filter" Section 10 for more information.
16. **DPF Indicator Lamp:** Illuminates when pressure inside the Diesel Particulate Filter (DPF) reaches a predetermined level. See "***Diesel Particulate Filter"*** Section 10 for more information.
17. **HEST:** The HEST (High Exhaust System Temperature) light turns on when the Diesel Particulate Filter (DPF) temperature exceeds 750º F. No fault exists as long as there are no other active warning lights. See ***Diesel Particulate Filter Section 10*** for more information.
18. **Seatbelt Warning:** Illuminates for 8 seconds accompanied by an alarm at each ignition cycle as reminder to fasten seatbelts.
19. **Cruise On:** Indicates cruise control power is enabled.
20. **Step Out:** Indicates the entry step is partially or fully extended.
21. **Low Wash:** Indicates a low level of washer fluid in the reservoir.

NOTE:
Some items may not be applicable indicated by N/A.

LCD Controller

Main – Press at any time to return to the main screen. The main screen displays outside temperature, chassis battery voltage and odometer.

Trip – Press to view Trip menu. Use the up or down arrow to highlight a trip, and press the Enter button to view trip information. Trip information includes average speed, distance traveled, trip time and fuel used.

Fuel – Press to display average miles per gallon, instantaneous miles per gallon, and fuel used. Hold the reset button for five seconds to clear.

Temp – Press to view outside, basement, transmission and engine coolant temperature.

Diag – Press to view engine, transmission, ABS, and LCD diagnostic menu. Use the up and down arrow to highlight an option from the menu. Press the Enter button to view diagnostic information and options.

PSI – Press to view oil pressure, turbo boost pressure and front and rear air tank PSI.

Reset – Press and hold for five seconds to clear selected trip information (trips 1 through 4 can be individually selected for reset).

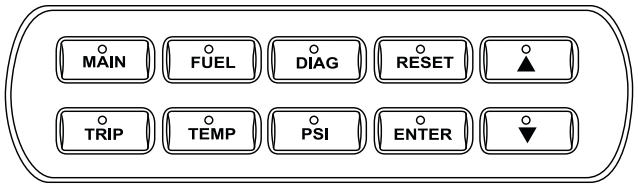

LCD Controller

LCD Display

The LCD displays chassis data and fault codes. A ten button controller is located on the dash. Press the up and down arrows to scroll through menus, and press the enter button to select items.

The LCD will show the following warnings:

- Eng Comm Failure
- ABS Comm Failure
- Trans Comm Failure
- Low Oil Pressure
- High Trans Temp
- High Coolant Temp
- Low/High Battery
- Low Air Pressure – Front
- Low Air Pressure – Rear
- Low Fuel Level
- Engine Not Running
- Low Coolant Level
- Headlight On
- Turn Signal

- For "Turn Signal" to display, the motorhome must be driven at least one mile with turn signal activated before warning appears.

How to Adjust Screen Contrast:

1. Press Diag button on LCD Controller.
2. Arrow down to 4 - Ins. Diag. Press enter.
3. Arrow down to 5 - Contrast. Press enter.
4. Use arrow buttons to select value desired. 40 is the default value.
5. Press Main button on LCD Controller to exit.

Switches

Dash switches come either with or without a bar light. The bar light indicates the item/function is active. Icon lighting for both switch types illuminate with panel lamps. Dash switches can be illuminated and dimmed if desired, by turning the headlight switch counterclockwise. Rotating clockwise dims and turns off switch backlighting.

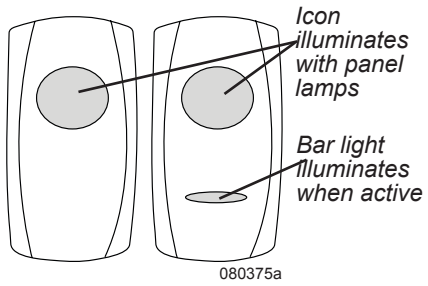

Typical switch configuration

- Driver's Console

Transmission Shift Selector:

Selects between neutral, forward and reverse. Mode button selects economy mode. Also used to determine transmission fluid level, retrieve diagnostic trouble codes and displays a wrench when service is due.

See ***"Transmission"*** in Section 10 for further information.

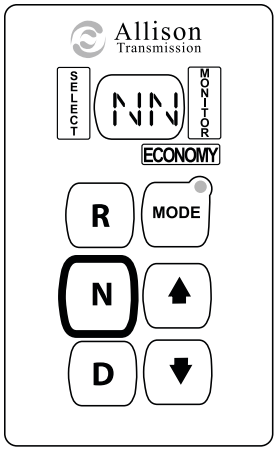

Mirror Adjust:

Adjusts the upper portion of the rear view mirrors. Place switch to R or L then use the outer section to adjust. Place switch in the center to disable mirror adjustment.

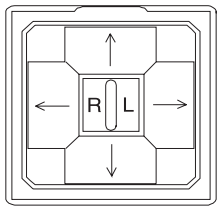

Front Visor:

Operates the power sun visor.

CAUTION:
Do not operate the motorhome unless the power visor is fully raised.

Front Shade:

Operates the power shade.

Mirror Heat:

Turns on the heaters in outside rear view mirrors. Use mirror heat when defogging or deicing is needed. Mirror heat should turned off unless continuous fogging conditions occur.

Fog Lights:

Operates the fog lights with the ignition key on and the headlights set to low beam. The fog lights will go off when the headlights are switched to high beam.

Request Regen:

Three position switch (center is off) used to initiate a parked regeneration cycle of the DPF (Diesel Particulate Filter) or cancel a parked regeneration cycle that is in process. See ***"Diesel Particulate Filter"*** in Section 10 for more information.

Inhibit Regen:

When switched on prevents a rolling or parked regeneration cycle of the diesel particulate filter from occurring. Used when a regeneration cycle could be hazardous. See ***"Diesel Particulate Filter"*** in Section 10 for more information.

ATC:

The ATC system improves traction on slippery or unstable surfaces by preventing excessive wheel slip. See ***"ABS/ATC"*** section 10 for more information.

Batt Boost:

Connects the house batteries to the chassis batteries to assist in starting the engine in the event the chassis batteries are too discharged to start the engine.

Side Dock:

Turns on the side docking lights located on the roadside and curbside. Used to illuminate parking space and area around the motorhome

Air Dump:

Used with hydraulic leveling. Manually dumps air from the air suspension. Lower the suspension can aid in leveling the motorhome by providing further travel of the leveling jacks. The ignition must be in accessory or run position to use the Air Dump switch.

CAUTION:
Do not drive the motorhome with the air springs deflated. This can damage the drive train and/or bodywork.

Leveling Controls:

See ***"Leveling"*** section 10 for operating instructions.

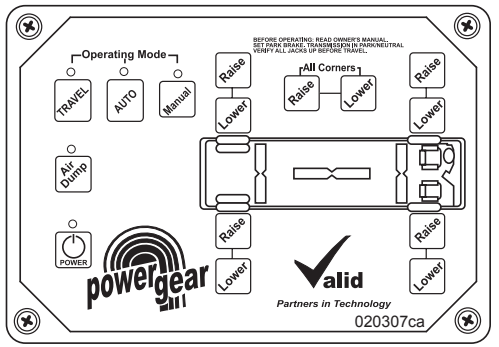

Air leveling control panel

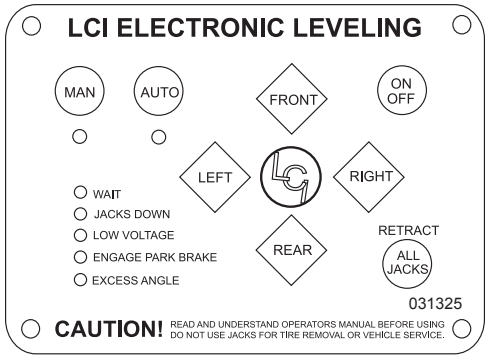

Hydraulic leveling control panel

- Dash & Center Console

Headlight Switch:



Pull one click to operate the marker lights and taillights. Pull two clicks to operate the headlights, marker lights and taillights. Rotate the headlight switch fully counterclockwise to turn on the map light.

NOTE:
A warning bell will sound if the headlights are on and the ignition is turned off.

Parking Brake:

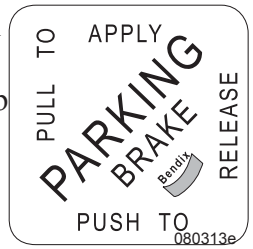

The parking brake system is activated by pulling out on the knob. When the knob is pushed inward, the park brake is released. Prior to driving, allow the air system to fully pressurize as indicated by the purge cycle of the air dryer then release the parking brakes.

WARNING:
It is possible for the parking brake to be accidentally release if the air system is charged. It is advised to fabricate a blocking device to be placed between the parking brake handle and dashboard to prevent children or pets from releasing the brake when parked.

Dimmer/Rheostat:



Controls gauge and switch backlighting when the headlight switch is on.

Radio:
Provides power to operate the dash radio when the ignition switch is turned off. Radio memory is not affected when the switch is turned off.

Step Cover:
Extends and retracts the step cover. The ignition must be on to operate the step cover.

WARNING:
Be sure there are no pets, shoes or other obstructions in the stepwell area when operating the stop cover. Do not operate the step cover while standing in the stepwell area.

Gen Set:
The generator automatically initiates a preheat cycle when the switch is pressed to Start. The preheat cycle is indicated by the light on the switch flashing rapidly. Depending on ambient temperature, the preheat cycle may last up to fifteen seconds.

- To Start the Generator: Press and hold the switch to Start. The light flashes rapidly indicating preheat cycle. At the end of the preheat cycle, the generator engine will crank and start. Release the switch after the generator has started.

- To Stop the Generator: Momentarily press the switch to Stop. It is not necessary to press and hold the switch to stop the generator.

Backup Monitor:
Displays the backup camera and side view cameras. The radio switch or ignition switch must be on to operate the backup monitor.

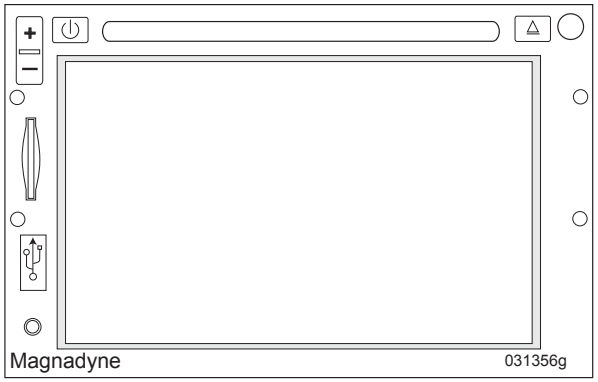

Rear view system

- Passenger Console

Batt Cut Out:
Turns on interior 12 Volt power. Press up to activate. Press down to deactivate.

Entry Step:
Provides power to operate the entry step.

Patio Awning On-Off:
Turns power on and off to the Patio Awning Ext/Ret switch.

Door Awning Ext/Ret:
Extends and retracts the entry door awning

Ceiling Light:
Turns on the forward ceiling lights from the entry area.

Porch Light:
Turns the porch light on and off.

Patio Awning Ext/Ret:
Extends and retracts the patio awning.

Stor Light:
Turns storage compartment lights on and off.

Step Cover:
Extends and retracts the step cover. The ignition must be on to operate the step cover.

WARNING:
Be sure there are no pets, shoes or other obstructions in the stepwell area when operating the stop cover. Do not operate the step cover while standing in the stepwell area.

Map Light:
Turns on the map light located above the co-pilot.

Step Light:
Turns the stepwell light on.

AIR CONDITIONER & HEATER CONTROLS

The system is designed to provide heating, cooling and defrost for the pilot and co-pilot area. The system is not capable of heating or cooling the entire motorhome.

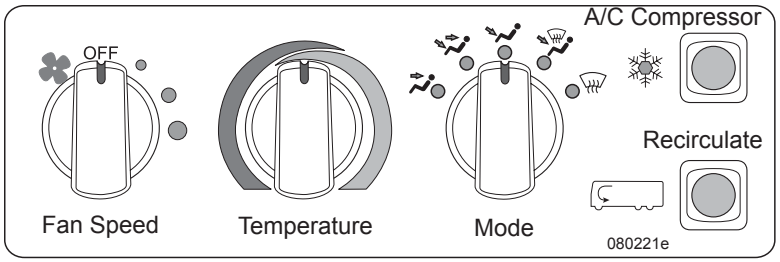

Fan Speed: Controls speed of the blower motor.

Temperature Control: The red zone regulates the amount of warm air in any heating mode. The blue zone regulates the amount of cool air. The blue zone is also used to regulate temperature when the A/C Compressor is turned on.

Mode Control: Directs air flow to points indicated.

Recirculate: Use this setting for maximum cooling or heating. Fresh air is closed off and air recirculates through the system.

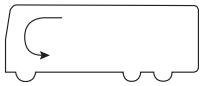

A/C Compressor: Activates the A/C Compressor in any mode.



NOTE:
The air conditioning compressor can be turned on to dehumidify the air in Defrost and Mix modes.

LUBE:
Activate the A/C system monthly to keep internal components of the compressor lubricated.

Vent – Uses outside air. Adjust fan speed and temperature for desired comfort level. Air is discharged through the dash louvers. The A/C compressor will not activate in this mode.



Bi-Level – Uses outside air. Adjust fan speed and temperature to the desired comfort level. Air is discharged through the dash louvers and the foot louvers. The A/C compressor will not activate in this mode.



Floor – Uses outside air. Use this setting for maximum heating. Adjust temperature and fan speed to the desired comfort level. The A/C compressor will not activate in this mode. The system may discharge a small amount of air through the dash louvers.



Mix – Use this setting for floor heat and defrost. Adjust fan speed and temperature to the desired comfort level.



Defrost – Use this setting for maximum defrost. Adjust fan speed and temperature to the desired comfort level. Turn on the A/C compressor to help dehumidify air. This can be helpful when the recirculate feature is on.

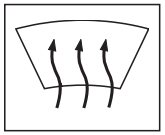

WARNING:
To maintain clarity of vision in extreme weather, it may be necessary to manually remove moisture from the interior side of the windshield. Do Not operate the motorhome if vision is obscured by moisture or ice on the windshield.

Maintenance

A seasonal inspection should be performed by a qualified service technician. Some items to check include:

- Inspect the inlet to the evaporator coil for lint, dirt or other foreign materials which may have been drawn into the unit. Any obstruction of the evaporator coil will impair cooling efficiency and reduce air flow.
- Clean the condenser coil of bugs, leaves, or other debris.
- Inspect compressor drive belt for wear and proper tension.

Operating Tips & Hints

Air intake and discharge temperatures are greatly affected by ambient temperatures and relative humidity. A large amount of cooling capacity is used to dehumidify as well as cool air. After three to five minutes of A/C operations, discharged air temperature should be approximately 20º to 30º F. cooler than the fresh or recirculated air entering the A/C system.

At the beginning of the day, activate the compressor with the engine at idle. This will avoid sudden high speed activation resulting in possible damage from lack of internal compressor lubrication.

Winter Use:

- De-ice the windshield using the defrost mode.
- Air will heat up faster with a slower fan speed until normal operating temperature ranges are reached.

Summer Use:

- Close all windows and vents to hot, humid outside air.
- Use a lower fan speed to produce cooler air.
- Temperature Control switch must be set to the blue zone for cool air.

Heat and Defrost Operation:

- Set the Mode Control to the desired position.
- Set the Temperature Control to the red zone.

Heater: The heater warms the air in the dash area. Much like the refrigeration side of the system, engine coolant will be used in the process. The coolant is passed from the radiator to an electronic water valve. When open, the water valve will allow the coolant to flow through the heater core. The heater core is a small radiator. Air is drawn into the system by a blower motor through the outside recirculation door opening. Air is blown through the A/C evaporator core and then through the heater core. When the temperature control is in the warm position coolant flows through the heater core. When the temperature is in the cool position coolant flow bypasses the heater core. In either position, the airflow is felt at the discharge vents.

Electric Water Valve: The water valve controls the water flow to the heater core.

Functional Test:

- Start and operate the engine until the water reaches normal operating temperature.
- Set the temperature control to the full hot position.
- The discharge air outlets should have hot air.
- Rotate the temperature control to full cold position.
- Allow the temperature to stabilize.
- The discharge air outlets should have cool (non-heated) air.

System Components

A/C Compressor - The a/c compressor is belt driven from the engine through using an electric clutch. The compressor will pump refrigerant from a low-pressure gas into a high-pressure, high-temperature gas. This is the start of the refrigeration process.

Receiver-Drier - Refrigerant leaves the compressor as a high pressure liquid where it enters the receiver-drier and is stored until needed. The drier filters out moisture in the system. It only takes one drop of moisture to cause a malfunction in the cooling unit.

Expansion Valve - The expansion valve suppresses refrigerant into the evaporator according to cooling requirements. The pressure is reduced in the restrictive effort of the expansion valve. A part of the valve is the capillary tube assembly. The capillary tube meters the amount of refrigerant into the evaporator.

Evaporator - The evapaporator is a small radiator. The a/c compressor creates a vacuum in the evaporator where refrigerant is expelled through the capillary tube where refrigerant turns from a condensed liquid into a gas. Refrigerant gas extracts heat from the evaporator.

Condenser - The condenser is made of coils and fins that provide rapid transfer of heat from the refrigerant as external air passes over the coils. The high-pressure gas is changed to a high-pressure liquid.

Condenser Fan - A steady flow of cooling air is maintained across the condenser during system operations.

Blower Motor - The blower will draw air from the cab area and force the air over the evaporator coils and fins. This forced air will ensure continuous vaporizing of the refrigerant.

Damper Doors - The damper doors use electric motors to open/close to direct airflow.

Troubleshooting

No Cooling:
- Check that the blower is operating.
- Check the A/C switch is on.
- System fuses are not blown.
- Condenser fan is operating.
- Check wiring.
- Drive belt is loose or broken.
- Compressor clutch is inoperative, will not engage.
- Expansion valve is faulty or frozen.
- Thermostat control is faulty.
- Compressor is faulty.
- Loss of refrigerant.

NOTE
An ultraviolet or UV Blue Light cube is used for leak detection when dye is introduced to the A/C System.

Reduced Cooling:
- Coolant valve not operating correctly.
- Air passages are obstructed.
- Loose or worn drive belt.
- Check blower and thermostat.
- Thermostat is faulty.
- Expansion valve is faulty.
- Compressor is faulty.
- Low refrigerant charge.

No Heating:
- Fan speed switch is turned off.
- Verify proper engine coolant level.
- Verify that the engine is reaching operating temperature.
- Verify engine coolant is reaching water valve attached to unit.
- Verify operation of water valve to permit engine coolant to pass through valve to heater core.
- Check unit fuses.
- Check wiring.
- Engine thermostat faulty.

Blower Does Not Operate or Runs Slow:
- Check fuses.
- Check for loose or corroded connection.
- Check wiring.
- Check fan speed switch.
- Motor shaft has seized.
- Blower wheel is out of alignment.

Damper Doors Do Not Operate:
- Check wiring to damper door motor.
- Damper door motor defective.
- Check mode control switch wiring.
- Mode control switch faulty.

DIAGNOSTIC PLUG LOCATION

A drive train diagnostic plug is located in the rear curbside compartment on the rear electrical panel and under the dash to the left of the steering column. Drive train systems; ABS, engine and transmission systems communicate over a network cable using SAE J1939 standards. A service technician can retrieve system data and trouble codes through the diagnostic plug.

Engine Diagnostics:

Engine diagnostics will notify the operator or technician of deviations from the programmed limits of the engine through the Warning Triangle and/or Stop Engine indicators. Should a system component with the engine develop a deviation, the Warning Triangle and/or Stop Engine light will illuminate and a diagnostic code will be logged and stored in memory. These codes are accessed through the diagnostic plug by a service technician.

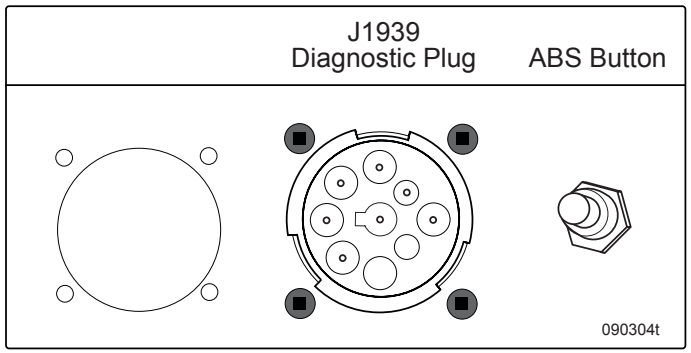

Located left of steering column under dash

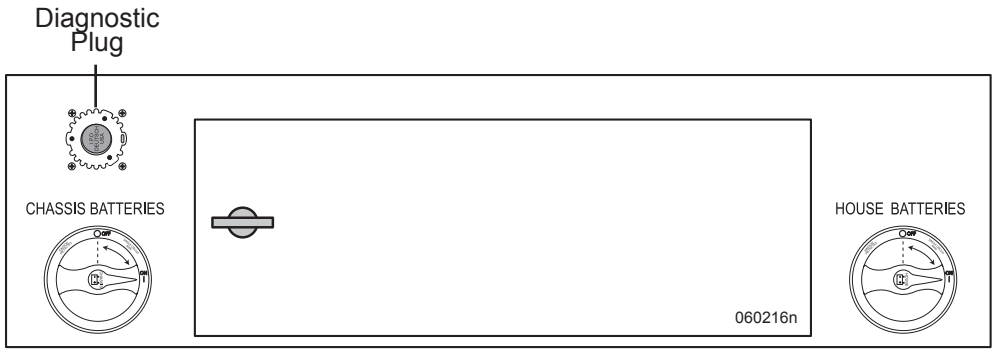

Rear electrical box located in rear curbside bay

ENGINE "NO START" FLOW CHART

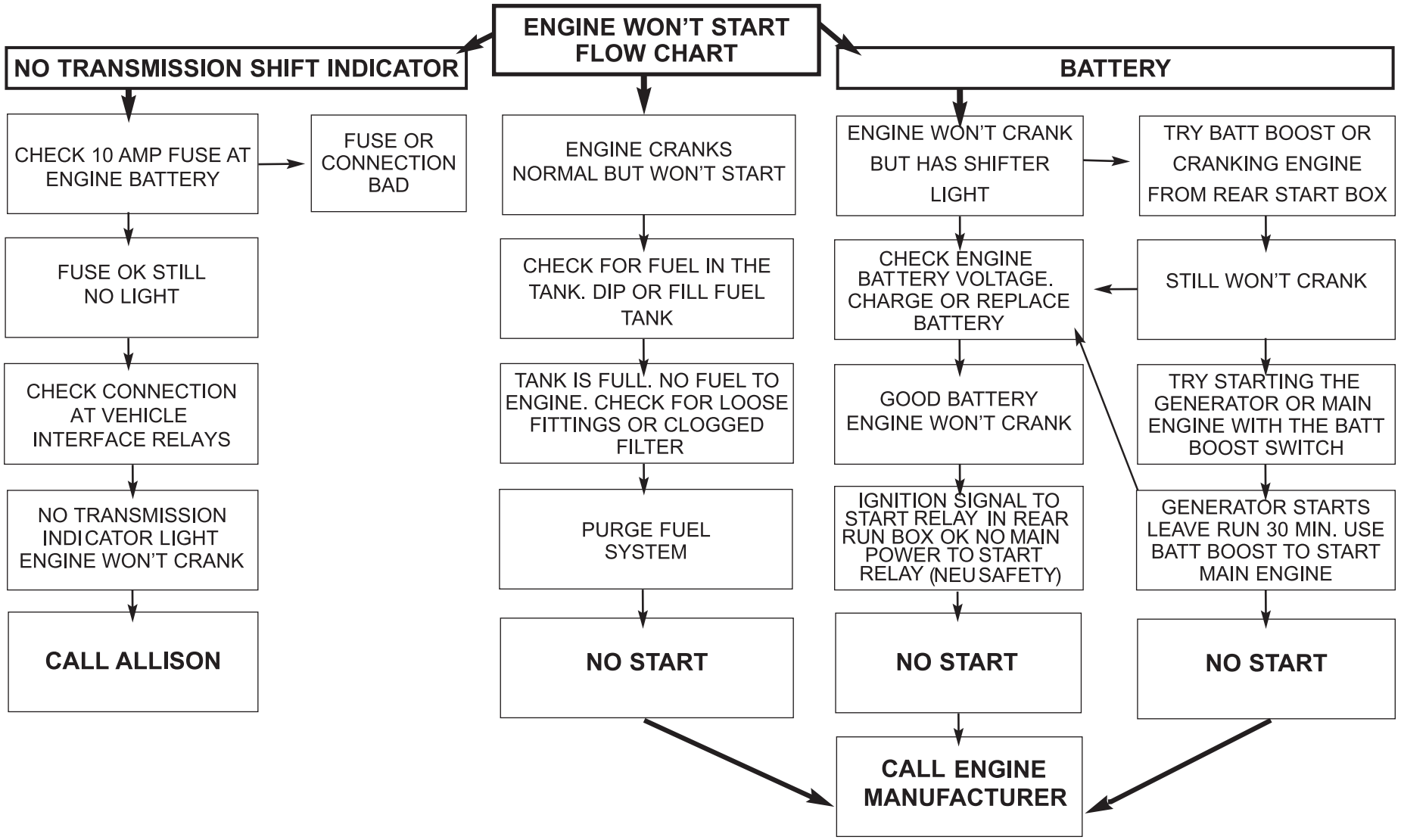

NOTES

Chassis
Section 10

CHASSIS - INTRODUCTION 212
AIR SUPPLY SYSTEM 212
- Air Governor 213
- Air Storage Tanks 213
- Air Fittings 214
- Air Coupler 214
- Air System Charging (External) 215
- Air System Test 215

AIR DRYER 216
- Desiccant Cartridge 217
- Desiccant-Type Air Dryer 217
- Air Dryer Cycle 218

AIR SPRING INSPECTIONS 218
HEIGHT CONTROL VALVES 218
BRAKE SYSTEMS 219
- Air Brakes 219
- Park & Emergency Brake System 219
- Automatic Slack Adjuster 219
- Brake Systems - Backup 220

ABS/ATC SYSTEM (ANTI-LOCK BRAKES) 220
FRONT AXLE 223
- Alignment Specifications 223
- Lubrication Maintenance Safety 224
- Steering Components 224
- Intermediate Steering Shaft 225
- Drag Link 225
- Center Link 225
- Steering Spindles 226
- Control Arm Bushings 226
- Drum Brake Lubrication 226
- Steering Gear 226

DRIVE AXLE & DRIVE SHAFT 227
TAG AXLE 229
- Tag Axle Operation 229
- Adjusting Tag Axle Load 230
- Tag Axle Lubrication 230
- Oil Change Intervals 230

SHOCK ABSORBER 231
LEVELING - AIR 231
- Automatic Air Leveling 232
- Manual Air Leveling 232
- Travel Mode 233
- Service 233

LEVELING - HYDRAULIC (OPTIONAL) 233
- Prior to Leveling 234
- Automatic Leveling 234
- Manual Leveling 235
- Jack Retract Procedure 235
- Jacks Fail to Extend or Retract 236
- Control Pad Lockup 236
- Maintenance 236
- Checking/Adding Hydraulic Fluid 237
- Manual Override 237

ENGINE - GENERAL INFORMATION 238
STARTING PROCEDURE 239
- Normal Starting 239
- Cold Weather 239

ENGINE OIL 240
ENGINE SHUTDOWN 241
- Extended Engine Shutdown 241

COOLANT SYSTEM 241
- Radiator/Charge Air Cooler 244

REAR GRILLE 245
ENGINE BRAKE 245
TRANSMISSION 246
- Shift Selector 246
- Trans Service Icon 247
- Check Trans Icon 247
- Diagnostic Trouble Codes 248
- Transmission Fluid 249
- Filter Change Interval 250

FUEL SYSTEM 251
- Fuel Requirements 251
- Fuel Tank 252
- Fuel Sender 252
- Fuel Lines & Hoses 252
- Fuel Filters 252

HYDRAULIC SYSTEM 254
- Hydraulic Reservoir 254
- Power Steering Hydraulic Filter 254

AIR FILTER 254
- Air Filter Indicator 255

ENGINE OIL SERVICE 256
- Service Interval 256
- Centrifuge Filter 256
- Changing the Oil 256

DIESEL PARTICULATE FILTER 257
- DPF Lamp Warning System 258

LUBRICATION MAINTENANCE 260
LUBRICATION CHART 264
- 36’ & 40’ Chassis 264
- 43’ Chassis 266

SPECIFICATIONS 268
- Tank Capacities 268
- Engine Specifications 268
- Chassis Fluid Capacities 268
- Belts & Filters 268
- Serpentine Belt Routing 268
- Generator Specifications 269
- Tire Size 269
- Battery Specifications 269
- Chassis Weight Ratings 269

MAINTENANCE RECORDS 270

CHASSIS - INTRODUCTION

This section contains information and instruction regarding various components of the motorhome chassis. Follow the guidelines and procedures to help understand and operate the motorhome. Complete instructions for engine and transmission may be found in each product's OEM manual included in the Owner's Information File.

WARNING:
When welding is involved for motorhome repair or modification, only qualified, experienced technicians should weld on the chassis. Improper welding procedures and materials may weaken the assembly or result in damage that is not obvious and may not cause an immediate problem or failure. Unauthorized modifications or repairs to the chassis could result in a forfeiture of warranty coverage.

DANGER:
Due to the sensitive nature of the electronics on the chassis, the following precautions are required to protect electrical components in the motorhome chassis:

1. **Disconnect the (+) positive and (-) negative battery connections.**
2. **Disconnect wiring to the alternator.**
3. **Cover electronic control components and wiring to protect from hot sparks.**
4. **Disconnect the terminal plugs from the engine Electronic Control Unit.**
5. **Disconnect the terminal plugs from the Transmission Control Module located in the roadside front electrical bay.**
6. **Do not connect welding cables to electronic control components.**
7. **Attach the welding ground cable no more than two feet from the part to be welded.**

The Roadmaster chassis is a semi-monocoque design using all tubular steel. The semi-monocoque design provides greater structural integrity and overall uniform stress distribution. Incorporated in the Roadmaster chassis is the exclusive cushion air glide suspension system using eight outboard and two inboard mounted air springs and ten shock absorbers.

The location of the air springs and shock absorbers combined with the semi-monoque chassis provides the smoothest ride, best handling and trouble free service while delivering top notch drivability. The chassis has either an air/hydraulic or air leveling system.

The front and drive axles are affixed in the chassis with trailing arms in a parallel four link arrangement while the tag axle (43' units) uses leading arms. A panhard bar attached to the axle and frame prevents side motion of the axle in the chassis. The front and drive axles are mounted to a wide platform H-frame that carries the coach body on eight outboard mounted air springs, four front and four rear. The tag axle uses two in-board mounted air bags. Suspension bushings require no lubrication for ease of maintenance. Unlike suspension that uses springs, the air suspension system automatically maintains the same attitude and ride height throughout the entire load range. The towing receiver is rated at 10,000 lbs. towing weight and 1,000 lbs. tongue weight.



100168c

AIR SUPPLY SYSTEM

The air compressing system on the motorhome is comprised of several items: air compressor, air governor, air dryer, a front air tank and a rear air tank. The compressed air system operates several items, some of which include brakes, suspension, air horns, air gauge. The air system is charged by a gear driven air compressor mounted on the engine. As engine speed increases, compressed air output increases. When air is compressed, heat is generated. Heat dissipates as air is discharged from the compressor. Moisture condenses in the compressed air as it cools. The moisture laden air then enters an air dryer where the air is filtered. The filtered air charges the front air tank. The front air tank is divided in two halves: a wet side and a dry side. The compressed air enters the wet side before entering the dry side. A discharge line from the dry side of the front air tank charges the rear air tank. Discharge lines use inline check valves to prevent back flow of compressed air.

Pneumatically operated items are divided into two categories: brakes and accessory air. Brakes have full use of supplied air pressure. Accessory air items, such as air horns, receive air through pressure protection valves (PPV). The PPV will not allow compressed air flow until about 60 psi. In the event of an air system problem, the pressure protection valve will leave a reserve air charge for braking. Pressure protection valves are installed for safety.

Air Governor

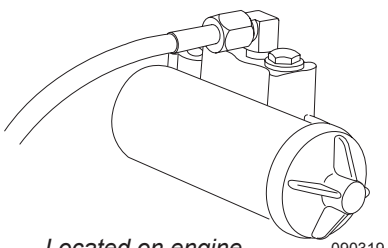

Located on engine 090319

The air governor regulates the air compressor to cut-in and cut-out, to keep the air system in the working range of about 100 to 130 psi. The air governor also sends an air "purge" signal to the Air Dryer.

When cut-out pressure is reached, the governor will send an air purge signal to the Air Dryer. This opens the purge port of the air dryer, expelling moisture. The purge action of the air dryer is identified by the short release of air at the rear of the motorhome.

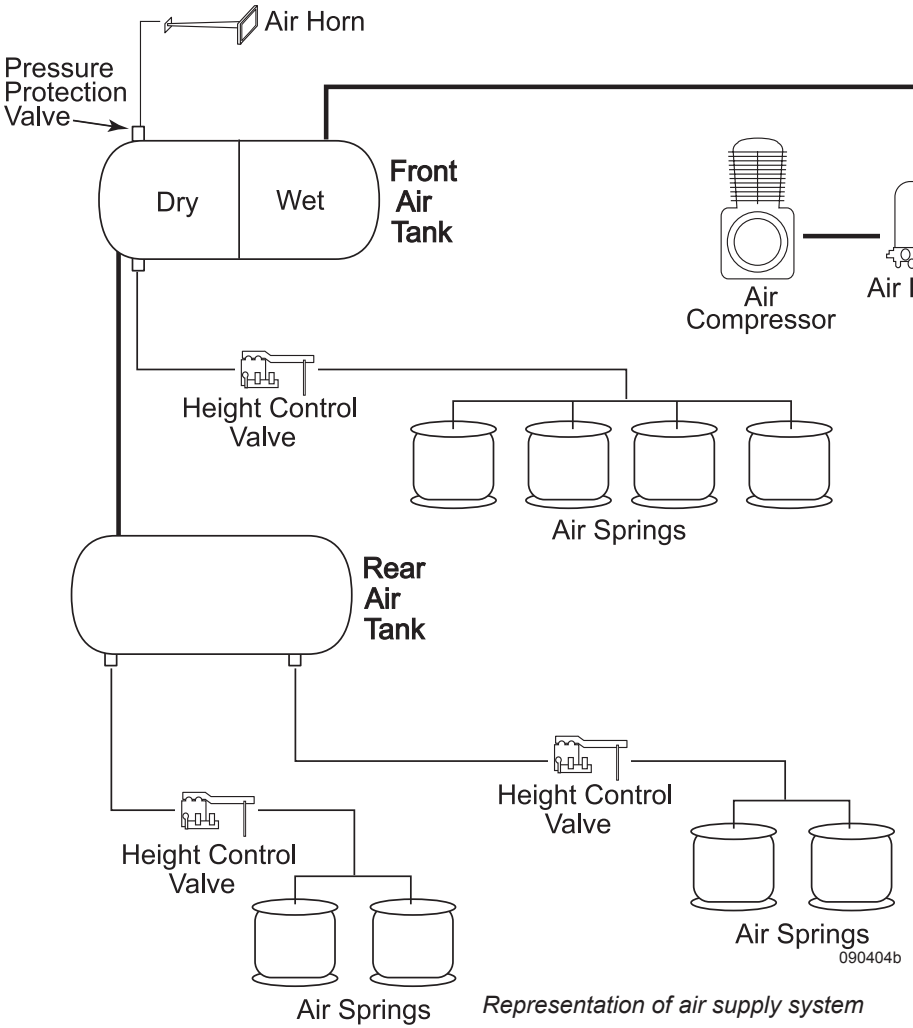

Representation of air supply system

Air Storage Tanks

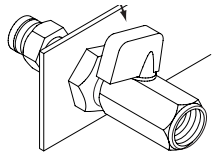

090435c

Rear tank drain: located next to rear hitch

Manually drain the front and rear air tanks once a month, or more, depending on operating conditions and humidity levels.

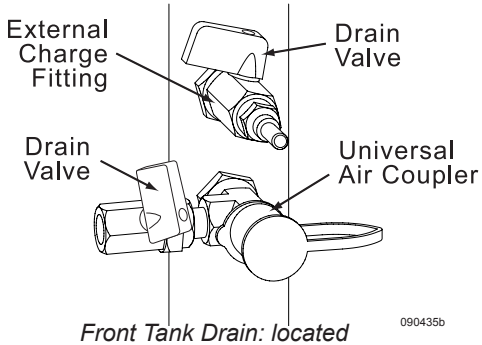

Front Tank Drain: located in generator compartment

To Drain the Tanks:

- Slowly open the drain valves. Moisture will be expelled under pressure. After all moisture and air is purged from the tanks, the valves should remain open an additional five minutes to allow any moisture remaining a chance to drain.
- Close valves and start engine. Check valves for leaks.

WARNING:
Wear safety glasses to prevent eye injury from expelled moisture. Open drain valves slowly as moisture will be expelled under high pressure.

NOTE:
The air tanks have a pressure relief valve which is set to release at approximately 150 psi.

Air Fittings

Push-in fittings are used to connect air hoses between pneumatically operated items. Fittings, sizes and types vary for different applications. Threaded fittings adapt the push-in fittings to connect pneumatically operated items. Parts include the release ring, locking ring, solid brass body and special rubber compound O-ring. Damaged hoses can be repaired by splicing.

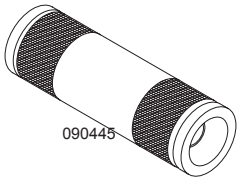

Splice Fitting for Repairs

To Disconnect Hose:

- Push hose into fitting.
- Push release ring down against locking ring portion of the fitting body.
- While holding the release ring down, pull hose away from fitting.

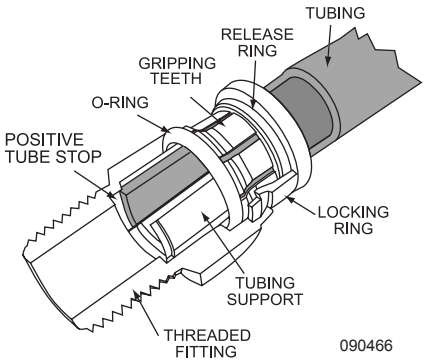

Cut-Away of Push-in Fitting

To Connect Hose:

- Push hose into fitting through the release ring and the O-ring. Use a slight twisting motion to seat firmly against the internal tube stop.
- Pull hose away from fitting to expand and set inner seal. Ensure hose is properly retained in fitting.

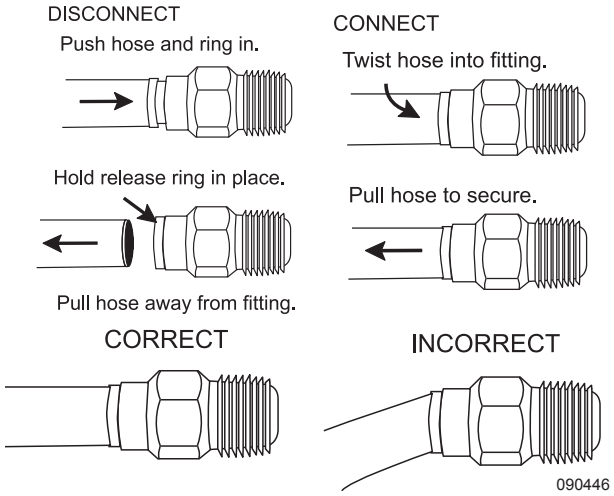

NOTE:
When putting an air hose back into the fitting, cut the hose as squarely as possible for an even seal in the fitting. The cavity of the positive tubing stop provides support to prevent leakage.

WARNING:
Do not remove air hoses from fittings while system is pressurized. Serious injury may occur.

WARNING:
Do not allow anyone under the motorhome without first properly blocking frame (jackstands) from coming down in case of rapid deflation of air system.

Air Coupler

Provided for convenience is a remote air supply coupler located in the generator compartment. This female fitting will accept type C automotive connectors. This auxiliary air fitting may be used to inflate tires, air mattresses or other pneumatic items.

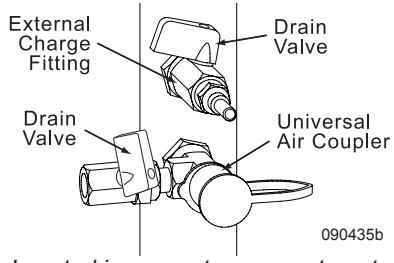

Located in generator compartment

This fitting is not designed to charge the air system on the motorhome. The air supply for the auxiliary air fitting is charged from the front air tank through a pressure protection valve.

To use this feature:

- Slide the locking collar back. Using a firm grip, fully insert the air fitting into the auxiliary air supply. Release the locking collar to retain the air fitting after the fitting is properly inserted.

To remove fitting:

- Firmly grip the air hose near the fitting to prevent recoil.
- Slide the locking collar back to release fitting.

NOTE:
Due to air pressure restrictions in the pressure protection valve and tire stem valve, the maximum amount of tire pressure achieved when the system is used to fill a tire is approximately 115 psi with the air system on the motorhome charged to 130 psi. Maximum outlet air pressure is achieved when the air system completes the fill cycle indicated by the purge cycle of the air dryer.

Air System Charging (External)

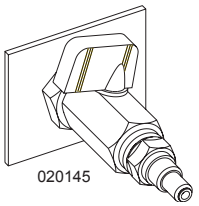

Located in generator compartment

The air system on the motorhome can be charged from an external air supply source. Located in the front generator compartment is a type C automotive male fitting. Caution should be used when charging the air system from this fitting. The air supplied from an external source may contain moisture. Compressed air introduced into the air system from this fitting is not filtered by the air dryer. The auxiliary air charge fitting will charge the front and rear air tanks. A shut-off valve is installed to prevent air from escaping.

CAUTION:
The external air supply source should be regulated to charge the air system on the motorhome no higher than 120 psi. Damage to the air system or pneumatically operated items may occur.

Air System Test

Air system integrity is tested at the factory. The air system is equipped with several safety features. Periodically test these safety features for function as well as checking the air system for possible leaks.

NOTE
These tests can also be found in the Department of Motor Vehicle (DMV) air brake certification requirement. Some tests will require precautions for safety purposes.

Inflation Rate Test:
This will test how long it takes the air system to achieve a specific pressure in a timed event when starting at a lower pressure. This test will verify the minimum acceptable volume of compressed air created by the air system.

- Start engine. Increase engine speed to 1000 rpm.
- Beginning time for the test will commence when air system pressure obtains 85 psi.
- End time when system pressure obtains 100 psi.

Elapsed time must not exceed 45 seconds.

Air Governor Cutout Test:
The air governor controls action of the air system pump. This will test the air governor cutout pressure setting, which indicates system pressure has achieved maximum set psi.

- Start engine.
- Run engine until a chuff (air release) is heard from the air dryer.

Maximum cutout pressure must not exceed 155 psi. Air system pressure will stabilize between 135 to 145 psi.

Unapplied Pressure Loss Test:
This test will verify maximum acceptable air system pressure loss rate without use of any pneumatically operated devices. This test requires a flat, level surface as the park brake will be released with the engine off. Chock wheels to prevent vehicle movement.

- Start engine.
- Run engine until a chuff (air release) is heard from the air dryer.
- Shut engine off.
- Release the park brake.

Note system pressure after air system stabilizes from release of park brake. Air system pressure must not lose more than 2 psi per minute.

Applied Pressure Loss Test:
This test will verify the rate of maximum acceptable air system pressure loss with only the service brakes applied. Do not use other pneumatically operated devices during this test. This test requires a flat, level surface as the park brake will be released with the engine off. Chock wheels to prevent vehicle movement.

- Start engine.
- Run engine until a chuff (air release) is heard from the air dryer.
- Shut engine off.
- Release the park brake.
- Apply and hold service brake pedal.

Note system pressure after air system pressure stabilizes. Air system pressure must not lose more than 3 psi per minute.

Low Air Warning Test:
This test will verify low air warning buzzer/lamp activation. A Low Air warning buzzer or lamp will sound/illuminate should air system pressure fall to 60 or 65 psi.

- Start engine.
- Run engine until low air warning indicators are inactive.
- Shut engine off then turn key to ignition on.
- Fan (apply/release in quick succession) service brake pedal.

Low air warning indicator will sound no lower than 60 psi.

Park Brake Apply Test:
The park brake will automatically apply if low air warning indicator(s) are ignored and system pressure falls well below safe operating levels. A flat, level surface is required as the park brake will be released with the engine off. Chock wheels to prevent vehicle movement.

- Start engine.
- Run engine until low air warning indicators are inactive.
- Shut engine off.
- Release park brake.
- Fan (apply/release in quick succession) service brake pedal.

The park brake will automatically apply between 20 to 40 psi.

Park Brake Hold Test:
This test will verify engagement of the park brake. A flat, level surface is required. While the test is performed with the park brake applied, use precautions in case of vehicle movement. This test only verifies the park brake is engaged. It is not intended to verify the maximum amount of braking force created by the park brake.

- Start engine.
- Place transmission into gear. Do not release park brake.
- Apply light throttle, not to exceed 1,000 RPM.

Test confirms that the park brake is engaged and holding.

Air Governor Cut-In Test:
The air governor controls action of the air system pump. This will confirm the air governor cut-in pressure setting.

- Start engine.
- Run engine until a chuff (air release) is heard from the air dryer.
- Fan (apply/release in quick succession) service brake pedal until system pressure is between 110 and 115 psi.
- Air governor cut-in pressure is approximately 115 psi.

Brake Grab Test:
This test will verify brake friction torque between the front wheels. This test requires a rapid and full pressure application of service brake pedal. Use proper precautions to prevent movement of cargo or other items that are not secured. This is a single vehicle test. Select deserted and level road surface (preferably a large and empty parking lot). Road crown, depending on severity, may affect test results.

- Start engine.
- Run engine until a chuff (air release) is heard from the air dryer.
- Release park brake.
- Accelerate to approximately 5 mph.
- Rapidly and firmly apply service brake pedal to bring vehicle to an abrupt stop.

The steering wheel will not pull to the left or right if front wheel braking torque is symmetrical.

AIR DRYER

The air dryer removes moisture from the compressed air system to prevent freezing of brakes or other pneumatically operated items. The three functions of the air dryer are cooling, filtering and drying the system air. This prevents valve and seal damage or wash away of lubricants as well as freeze damage to the system components.

Air Dryer Cycle:
The governor turns the compressor on when the supply tank pressure drops below cut-in pressure. Compressed air then passes into the air dryer at the inlet port. Moisture-laden air and contaminants pass through the desiccant. Moisture is retained by the desiccant and collects in the base of the dryer. When the compressor reaches cut-out pressure the purge valve opens and the dryer purges and expels water collected in the dryer base. The regeneration valve opens sending a small charge of dry system air from the front air tank back through the dryer. The backflow dries the desiccant, preparing it for the next cycle.

Air Dryer Components:

1. **Purge Valve:** A valve located on the bottom of the air dryer base that remains open during a compressor unload cycle to allow collected moisture, condensation and contamination to expel from the air dryer during the purge cycle.

2. **Pressure Relief Valve:** Protects the air dryer from over-pressurization.

3. **Regeneration Valve:** Controls regeneration of the desiccant by allowing air from the supply and secondary tanks to bypass the outlet check valve.

4. **Heater Power Connection:** Provides 12 Volt DC power to the heating element.

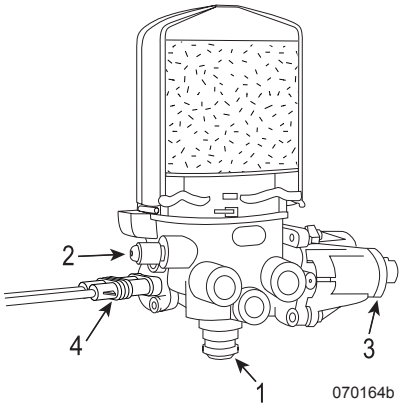

In extreme cold, verify that the air dryer heater is in good working order. The 100-watt heater in the air dryer is controlled by ignition power. The heater turns on below 45° F. and off when the air dryer temperature is above 86° F.

WARNING:
Remove all pressure from the air system before disconnecting any component, including the desiccant cartridge. Pressurized air can cause serious personal injury.

Desiccant Cartridge



Warm, humid air from the compressor condenses into either water or water vapor. A desiccant-type air dryer protects the air brake system by drying moisture-laden air before it passes through the air reservoirs and into the brake system. The replacement kit contains one cartridge and one O-ring.

To Replace the Cartridge:

- Loosen and remove the old cartridge. Use a strap wrench, if necessary.
- Remove and discard the O-ring from the dryer base.
- Inspect and clean the seal seat.

NOTE:
If the seats are damaged that an air tight seal cannot be maintained, replace the air dryer.

- Install a new O-ring.
- Lubricate the O-ring on the stem with a thin layer of grease.
- Lubricate the cartridge seal with a thin layer of grease.
- Thread the replacement cartridge onto the base until the seal touches the base. Tighten the cartridge ONE additional turn. Do not overtighten.

NOTE:
If an excess amount of water is present when performing the monthly air tank drain service, the filter for the air dryer may need to be changed.

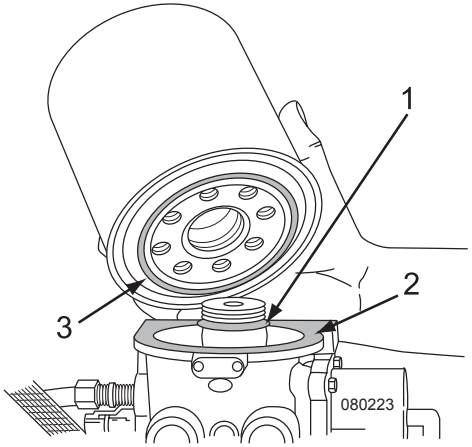

1. O-ring 2. Seal Seat 3. Cartridge Seal

REPLACEMENT REQUIREMENTS		
Components	**When to replace?**	**Why?**
Desiccant Cartridge	• Every two to three years. • When compressor is replaced. • Water in supply tank.	• Preventive maintenance. • Contaminated cartridge. • Saturated or contaminated cartridge, high duty cycle (wrong application of air dryer).

Desiccant-Type Air Dryer

- Warm, humid air from the compressor condenses into either water or water vapor before entering the air dryer.
- A desiccant-type air dryer protects the motorhome air brake system by drying moisture-laden air before it passes through the air reservoirs and into the brake system.
- Water collects in the base of the dryer when warm air condenses the water before it enters the dryer, or inside of the dryer before the water reaches the desiccant.

- The desiccant material then removes additional water vapor, further drying the air.
- During regeneration phase, the regeneration valve and pressure-controlled check valve remove water from the desiccant bed with a backflow of dried system air.

Air Dryer Cycle

The governor turns the compressor on when the system pressure drops below cut-in pressure. Compressed air passes into the air dryer at the inlet port:

- Moisture-laden air and contaminants pass through the desiccant.
- Moisture is retained by the desiccant. Moisture also collects in the base of the dryer.
- The governor turns the compressor off when the system reaches cutout pressure is obtained.
- The dryer purges and expels water collected in the dryer base.
- When the regeneration valve opens, dry system air flows back through the dryer. A small charge of air from the front air tank backflows through the filter. The backflow dries the desiccant, preparing it for the next cycle.

AIR SPRING INSPECTIONS

Items listed should be checked when the motorhome is in for periodic maintenance.

WARNING:
Do not attempt to service the air suspension on a motorhome with the air springs inflated.

- Inspect the Outer Diameter (OD) of the air springs. Check for irregular wear or heat cracking.
- Inspect air lines to ensure contact does not exist between air line and OD of the air springs. Air lines can rub a hole in an air spring very quickly.
- Ensure there is sufficient clearance around the complete circumference of the air spring while at maximum diameter.
- Inspect the OD of piston for buildup of foreign materials. On a reversible sleeve style air spring, the piston is the bottom component of the air spring.
- The correct ride height should be maintained. All motorhomes with air springs have a specified ride height established by the manufacturer. This height should be maintained within ¼ inch. This dimension can be checked with the motorhome loaded or empty.
- Height control valves control the amount of air in the air springs. Clean, inspect and replace if necessary.
- Make sure to check shock absorbers for leaking hydraulic oil and worn or broken end connectors. The shock absorber will normally limit the rebound of an air spring and keep it from hyper-extending.
- Check tightness of all mounting hardware (nuts and bolts). If loose, tighten. Do not overtighten.

Cleaning:
The approved cleaning method is to use soap and water, methyl alcohol, ethyl alcohol or isopropyl alcohol. Unapproved cleaning methods include all organic solvents, open flames, abrasive and direct pressurized steam cleaning.

HEIGHT CONTROL VALVES

Height Control Valves (HCV) inflate or deflate the air springs to maintain proper suspension height throughout the load range. Two Height Control Valves are installed at the rear drive axle to control rear suspension height and left or right tilt of the motorhome. A separate HCV is installed to control front suspension height. The three HCVs mount to the main frame of the motorhome, above the axles, with a linkage rod connecting the valve to the axle.

Actuating components inside of the valves are oil dampened to reduce valve reaction to momentary suspension bounce and rebound. When a constant suspension change occurs, such as a load change or weight transfer through a sustained corner, the valve reacts by adding or purging air from the air springs as needed.

The air springs mount between the axle H-frame assembly and the two main frame rails. Air spring support plates mount to the main frame and the H-frame. There is a specified distance the air spring must maintain between the mounting plates. Other than specified distance between the plates will compromise ride quality and handling, and affect shock absorber travel, drive shaft angle, as well as various other running gear components.

BRAKE SYSTEMS
Air Brakes

The air brake system on the motorhome differs from a conventional automotive hydraulic braking system and should be treated differently. Proper maintenance and lubrication are the keys to keeping the air brake system in working order.

The air system supplies air to the foot brake (treadle valve). Pushing down on the treadle valve supplies an air signal to a sealed brake chamber that consists of a spring and air bladder. The air charge signal pushes on the bladder and extends a threaded rod connected to the automatic slack adjuster. The slack adjuster rotates the S-cam expanding the shoes against the drum. Air disc brakes follow much the same principle, with the exception of the threaded rod directly activating calipers.

Consideration needs to be given to stopping distances and air system pressures. The motorhome requires longer stopping distances. Each brake application uses air from the air system, and engine speed is directly proportional to how fast that air system is re-charged. Prepare for downhill grades. It may be necessary to select a lower gear and/or use the auxiliary braking device. Use individual short brake applications down long hills, rather than "riding" the brakes, to extend the life of the brake lining. Avoid overheating the brakes. Hot brakes have less stopping power. When maneuvering the motorhome around small areas, or backing into spaces, several individual brake applications might be made. Watch the air gauge. When preparing to back into a space swing the motorhome so it is aligned with the parking slot before backing up.

The air braking system on the motorhome is equipped with a low air pressure warning system safety feature. Should a low air condition arise while the vehicle is in operation, a warning will sound and a dash panel warning will appear at approximately 60 to 65 psi to alert the operator.

Park & Emergency Brake System

The Park and Emergency Brake System (Spring Brakes) applies to the rear drive axle only. When the park brake is applied, air is released from the rear brake chambers, allowing the large spring in each rear brake chamber to manually push the brake pads against the rotor. The air system must be charged above 35 psi to allow the park brake to release. Pushing down on the park brake handle charges the rear brake chambers with air pressure, overriding the emergency brake springs and releasing the brakes. In the event of air loss while the vehicle is under operation, the park brake will automatically apply (this occurs at approximately 30 psi), acting as an automatic emergency brake system.

When preparing to depart, allow the air system to achieve full air pressure as indicated by the air gauge needles. Listen for the air dryer to purge, indicating function. Look and listen for abnormalities. Abnormal air pressure readings from the air gauge alerts the operator to have the air system checked to avoid an untimely failure.

Should a failure occur in the air system, preventing the air pressure from building, it may become necessary to "cage" the spring brakes (See Section 2 Towing Procedures - *Disabling Parking Brake*).

This is an emergency procedure only. Caging the rear air brake chambers manually overrides the spring brakes and allows the vehicle to move. This procedure does not affect normal service braking.

NOTE:
When the park brake is released, the Park Brake illumination lamp will remain lit until air system pressure is above 65 psi.

WARNING:
When parked with the air tank not depleted, there is a possibility of an accidental release of the parking brake. Traveling with small children and/or pets may require a small block to be fabricated to prevent accidental release. The block should be placed under the knob on the dash panel. A wooden clothes pin clasped at the base of the shaft will work.

Automatic Slack Adjuster

The braking system is equipped with automatic slack adjusters. As brake lining wears, the slack adjusters will automatically ratchet on the return stroke as needed. This ratchet action will keep the brake lining at proper adjustment. Automatic slack adjusters and the connecting S-cam shaft require periodic lubrication and inspection.

NOTE:
Replacement parts should be of the same original equipment size and type. Mixing brake components may result in unequal braking action. Brake maintenance is not covered by the manufacturer.

WARNING:
Brake lining may contain asbestos material and should only be serviced by qualified service technicians who are trained in the appropriate precautionary procedures. If any loss of braking effectiveness or abnormal braking indications are noticed, the brakes and slack adjusters should be inspected by a qualified brake technician.

WARNING:
Do not manually adjust the slack adjusters. If any loss of braking effectiveness or abnormal braking indications are noticed, the brakes and slack adjusters should be inspected by a qualified brake technician. Automatic slack adjusters are not designed to be manually adjusted.

Brake Systems - Backup

The motorhome air braking system is equipped with backup safety systems and warning alarms in the event of air system failure. For example: should the air compressor fail to charge the air system and low air gauge readings go undetected, a low air pressure buzzer will sound and a low air pressure dash light will flash. These warning indicators occur at approximately 65 psi to alert the operator of an impending situation. If the motorhome is allowed continued operation, the pneumatic emergency spring brake relay valve installed in the air system senses the low air pressure condition and will release the air charge from the spring brake air chambers on the rear drive axle. In this case, the park brakes will automatically apply at approximately 30 psi. This safety backup system acts as an automatic emergency brake system.

Another backup safety is the air system separation of the front and rear brakes, implemented by using two air tanks. One tank is located in the front and the other is located in the rear. This separation allows the front air tank to operate the front brakes; the rear tank operates the rear drive axle brakes. This tank division gives reassurance in case one tank experiences a failure of an accessory air item allowing the compressed air to escape.

Accessory air items are other pneumatically operated items such as the air horn, vacuum generator, etc. The accessory air items operate only when air tank pressures exceed 65 psi. This is done with pressure protection valves. Should an accessory air item fail, the pressure protection valve (PPV) reserves the remaining air pressure of 65 psi for braking. This will leave the motorhome with one air tank fully charged for safety backup.

The rear air tank also has a safety backup - the safety inversion valve. The inversion valve senses the absence of rear air tank pressure. In this case the inversion valve will allow the operator to make a modulated spring brake application in conjunction with the emergency spring brake relay valve. The inversion valve allows the front air tank pressure to recharge the rear brake chambers after the modulated spring brake application is made. This backup system implements use of all the brakes, allowing the operator to bring the motorhome to a safe stop. In case of all compressed air charge escaping from the front air tank, the operator will still have full use of the rear brakes.

ABS/ATC SYSTEM (ANTI-LOCK BRAKES)

The motorhome is equipped with an anti-lock braking system (ABS) and automatic traction control system (ATC). The ABS system monitors wheel rotation speeds by using a 100-tooth magnetic tone ring mounted to the hub. Revolving with the wheel, the magnetic tone ring is polarized giving positive and negative pulsations. A stationary sensor is mounted adjacent to the tone ring to monitor magnetic pulses. The pulses are monitored by the ABS electronic control unit (ECU).

The ECU monitors all wheel sensors at the rate of 100 times per second. The ECU controls Pressure Modulator Valves. Pressure Modulator Valves have two electric-over-air solenoids, a hold solenoid and a release solenoid. The modulator valves are open under normal braking, allowing a straight through air signal from the treadle valve to the brake chamber. Should a wheel lose traction under a braking application, the ECU will energize the hold solenoid of the pressure modulator valve to interrupt the air signal from the treadle valve to the brake chamber. The release solenoid vents the existing air signal at the brake chamber to the atmosphere, allowing the skidding tire to regain traction. Skidding tires have less tractive efficiency. It is possible, under certain conditions, to have the wheel(s) skid with a normal functioning ABS system.

The ABS itself does not apply additional braking power. The purpose of the ABS is to limit wheel lock and decrease stopping distance. Cautious driving practices and maintaining adequate safe distance when following vehicles is the key to safe vehicle operation.

WARNING:
The ABS/ATC system is designed to increase tire to road surface traction but cannot overcome naturally occurring laws of physics. The ABS/ATC system, combined with safe driving practices, will reduce the possibility of wheel skid and loss of lateral stability.

ABS Component Function:

- Speed sensors and tone rings on each wheel monitor wheel rotation.
- Each speed sensor communicates wheel rotation pulses to the Electronic Control Unit.
- The ECU receives the speed sensor signal pulses to calculate speed and acceleration rates of each wheel.
- Based on the speed sensor input, the ECU detects impending wheel lock and operates the ABS Modulator Valves required for proper control. The Modulator Valves are operated in the Air, Release or Hold modes to regulate air pressure to the brake chambers.

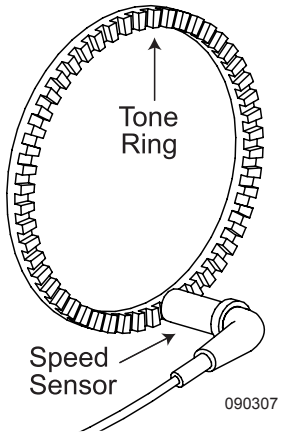

- Braking force is applied at a level that minimizes stopping distance while maintaining as much lateral stability as possible.

ABS Warning Light:

The ABS will perform a dash indicator lamp check and self-diagnostic test each time the ignition is switched to the on position.

- When the ignition is turned on, the ABS indicator illuminates momentarily (3 seconds) verifying the self-diagnostic test. If the ABS indicator light remains on, or illuminates while the motorhome is being operated, this indicates a fault in the anti-lock brake system. This fault will not affect normal service braking. The motorhome will need to go to a service center to repair the problem.

INFORMATION:
If a fault code occurs, call a Bendix service locator at 1-800-247-2725 and take the motorhome to the nearest repair facility.

ABS Diagnostic Button:

By properly actuating the ABS diagnostic button (located under the dash to the left of the steering wheel), system configuration codes and fault codes can be retrieved as blinked sequences on the ABS warning light. System configuration codes are sequences of six blinked digits while fault codes are sequences of two blinked digits. Refer to an authorized Bendix service center for a list of blink code sequences. If the Diagnostic button is not pressed correctly for a specific readout, stop and start over at the beginning of the procedure.

NOTE:
All blink codes are displayed by the ABS warning light only.

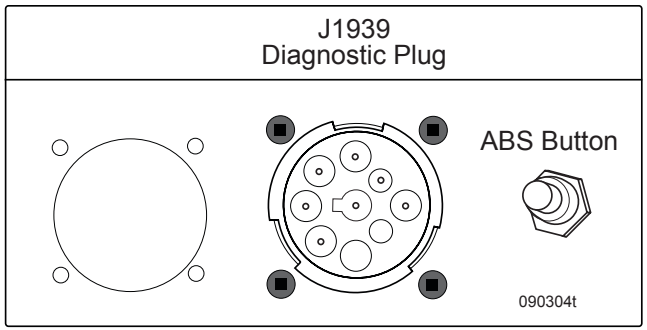

Located left of steering column under dash

After ignition, a two second delay must be observed prior to pressing the diagnostic button. For functions requiring multiple presses, the delay between presses cannot be longer than two seconds.

- **Press once for Active Code retrieval**.
- **Press twice for Inactive Code retrieval**.
- **Press three times for clearing Active codes**.
- **Press four times for System Configuration check.**
- **Press five times for Dynamometer Test Mode**.
- **Press seven times for Reconfigure ECU**.

NOTE:
Reconfigure Mode is entered by holding the switch in prior to "ignition on." Once ignition is on, release the switch and press seven times.

ATC System:

The ATC system improves traction on slippery or unstable road surfaces by limiting excessive drive wheel slip. This is accomplished two ways, limiting engine torque to the drive wheel or engaging a brake to the spinning drive wheel. During normal operation engine torque is unaffected. The ATC system works in conjunction with the ABS Electronic Control Unit. The ECU monitors tone ring speed of the drive wheel in relation to the other wheels. If a speed differential occurs in the drive wheel, the ECU enters Automatic Traction Control mode.

During an ATC event, the ECU will automatically react to optimize traction and safety if the motorhome encounters a slippery road surface. Engine torque is normally reduced to limit drive wheel slip.

NOTE:
The ATC system is always active.

ATC reacts to drive wheel slip by:

- Reducing engine torque to the drive wheel if road speed is above 25 mph.
- Reducing engine torque and activating drive axle brake controls if road speed is below 25 mph. If the brake control activates, it remains active regardless of road speed.

ATC Switch:

Activating the ATC switch reduces ECU control over engine torque. Momentarily pressing the ATC switch allows the ECU to increase the amount of engine torque applied to the drive wheel in an ATC event.

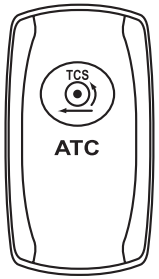

080498y

Located on driver's console

The amount of engine torque applied to the drive wheel will vary with the amount of drive wheel slip versus road speed. In an ATC event, the ECU remains active regardless of road speed or switch position. The light flashes slowly when the ATC switch is activated.

ATC Indicator Light:

During normal operation, the ATC indicator light on the dash will illuminate steady when the ignition key is turned on. If an ATC event occurs, the indicator light will flash quickly. The indicator light will flash slowly if the ATC switch is activated.

CAUTION:
Normally the switch should remain inactive. During an ATC event (drive wheel slip) the ECU will automatically optimize drive wheel traction in most situations. Activating the switch during periods of wheel slip can increase torque to the spinning drive wheel. Drive train damage can occur if the spinning drive wheel should suddenly regain traction.

CAUTION:
If the motorhome is stuck it is advised to call a professional towing company to limit the possibility of body and drive train damage.

How Automatic Traction Control (ATC) Works

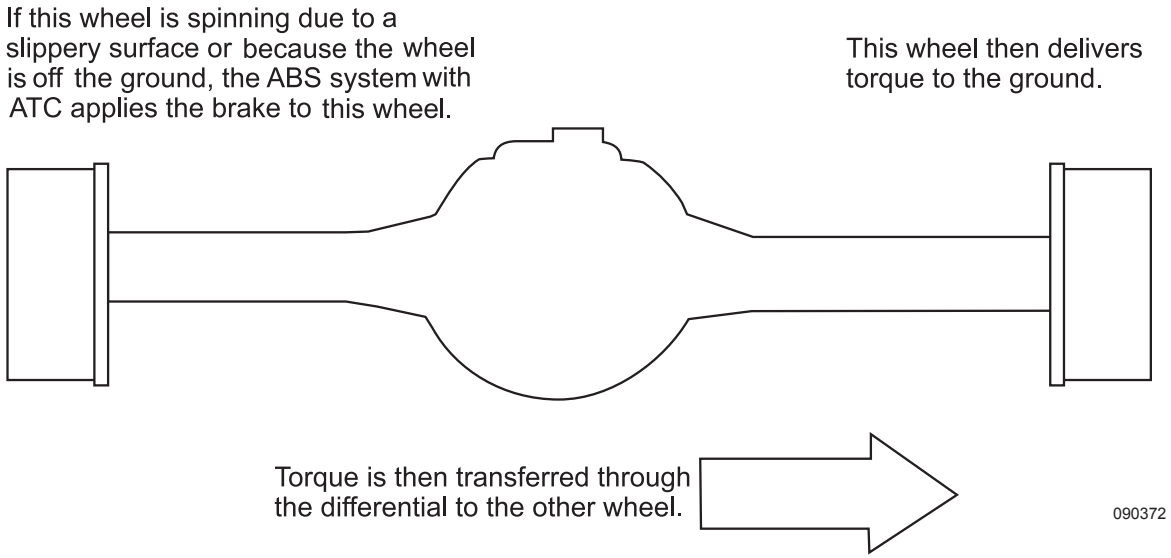

FRONT AXLE

While driving the motorhome, be aware of any changes in the feel of steering and have the system checked when noting apparent differences. It is normal to hear some hydraulic noise from the steering, especially when the steering is at maximum, or while turning the wheel when the motorhome is parked. Investigate any unusual or loud noises that occur. Begin by checking the level of the hydraulic fluid. Traveling at slow speeds over rough surfaces may cause a “clunking” noise to emanate from the steering column, but if noise is heard on smooth surfaces while sharply turning back and forth, the noise should be inspected and repaired as necessary.

Shimmy and looseness should be checked and corrected as soon as possible. If looseness is felt in the steering, the steering linkages can be observed while someone turns the steering wheel left and right. Watch the linkages for evident play or uneven interaction between components to help pinpoint a problem. Wheel bearings should be cleaned and repacked with high-temperature bearing grease every 30,000 miles. Have the steering system checked for damage after a severe impact, such as striking large potholes or curbs, and front-end collisions. Observe alignment of the steering wheel; a change in alignment may indicate damage to the steering components or suspension. Maintenance for the system entails adequate lubrication. Use only a hand operated grease gun on the fittings.

Grease fittings for the steering system are found on the both ends of the drag link (the bar connecting the steering gear to the axle), and on the intermediate steering shaft located between the steering wheel and steering gear. The correct wheel alignment promotes longer tire wear and ease of handling while minimizing the strain on the steering system and the axle components. Use NLGI #2 Lithium soap base lubricant for all steering linkage and brake components.

Alignment Specifications

Camber:

Camber, as shown, is vertical tilt of wheel as viewed from the front of the motorhome. This is machined into the axle when manufactured and is not adjustable.

“Positive” camber is an outward tilt of the wheel at the top.

“Negative” camber is an inward tilt of the wheel at the top.

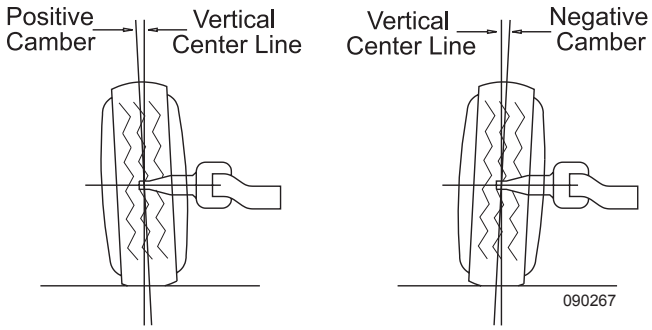

Toe Setting: The toe setting represents different distances between the front and rear of the steer axle tires as measured at the vertical center line of the tires.

	LEFT	RIGHT
Camber	1/8º +/- 7/16º	-1/8º +/- 7/16º
Caster*	4º +/- 1º	4º +/- 1º
Total Toe	1/16″ (0.08º)	

CAUTION:
The motorhome must be at ride height for proper alignment.

Toe-in: Occurs when the tire front distance is less than the tire rear distance.

Toe-out: Occurs when the tire front distance is greater than the tire rear distance.

Wheels are generally set with initial toe-in. As the motorhome operates tires tend toward a toe-out condition. By starting with an initial toe-in setting, a desirable “near zero toe-in” can be achieved when the motorhome is in motion. Incorrect toe settings, where toed-in or toed-out, can have a significant affect on tire wear. The toe setting is adjusted by lengthening or shortening the cross tube.

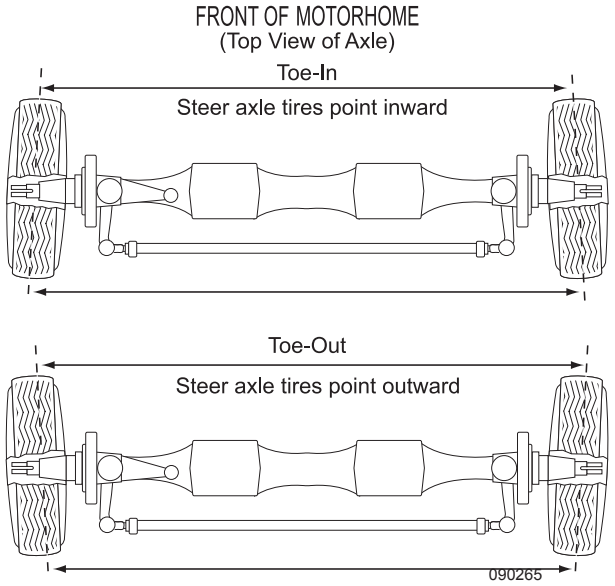

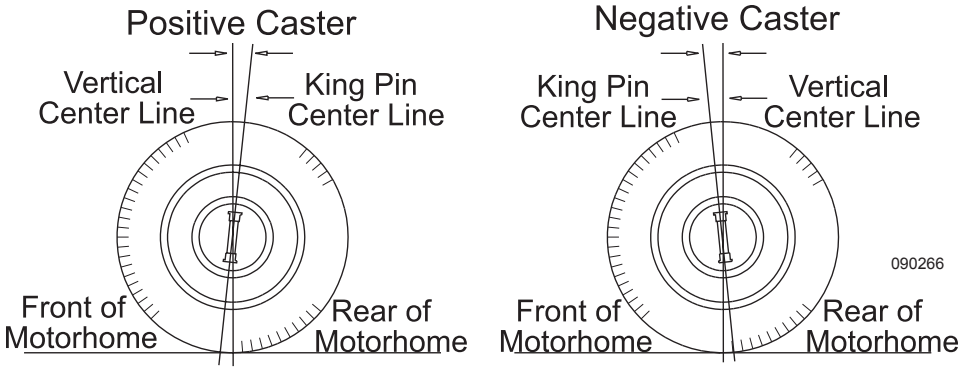

Caster Adjustments:

Caster is the fore and aft tilt (toward the front or rear of the motorhome) of the steering kingpin as viewed from the side of the motorhome.

"Positive" caster is the tilt of the top end of the kingpin toward the rear of the motorhome.

"Negative" caster is the tilt of the top end of the kingpin toward the front of the motorhome.

Setting the caster angle more positive than specified may result in excess steering effort and/or shimmy. Decreasing the angle may result in the motorhome wandering or poor steering return to center. The caster angle is determined by the installed position of the steer axle.

Lubrication Maintenance Safety

The front axle components require periodic lubrication maintenance. Chock wheels for safety prior to accessing components underneath the motorhome.

Steering Components

NOTE:
Suspension and steering components are lubricated at factory using a NLGI 2 Lithium Soap based grease.

WARNING:
Do not allow anyone under the motorhome without first properly blocking frame (jackstands) from coming down in case of rapid deflation of air system.

STEERING COMPONENTS

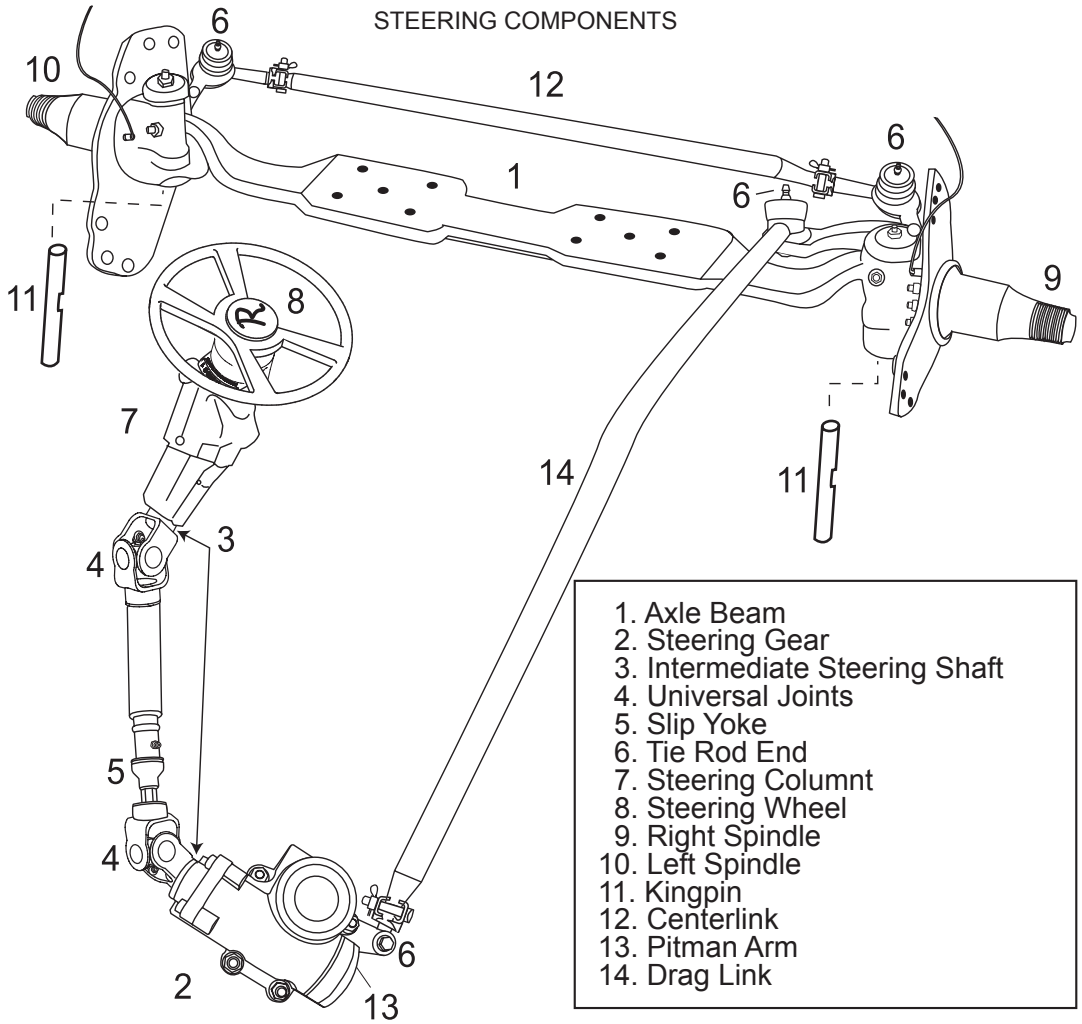

1. Axle Beam
2. Steering Gear
3. Intermediate Steering Shaft
4. Universal Joints
5. Slip Yoke
6. Tie Rod End
7. Steering Columnt
8. Steering Wheel
9. Right Spindle
10. Left Spindle
11. Kingpin
12. Centerlink
13. Pitman Arm
14. Drag Link

Intermediate Steering Shaft

The intermediate steering shaft connects the steering wheel to the steering box. Service the intermediate steering shaft universal joints and slip yoke every 30,000 miles or annually. Check the torque on the clamp bolt at least every five years or 50,000 miles. Remove the steering column cover to access the upper universal joint and slip yoke lubrication points. The lower universal joint is accessed from underneath in the generator compartment behind the front electrical box.

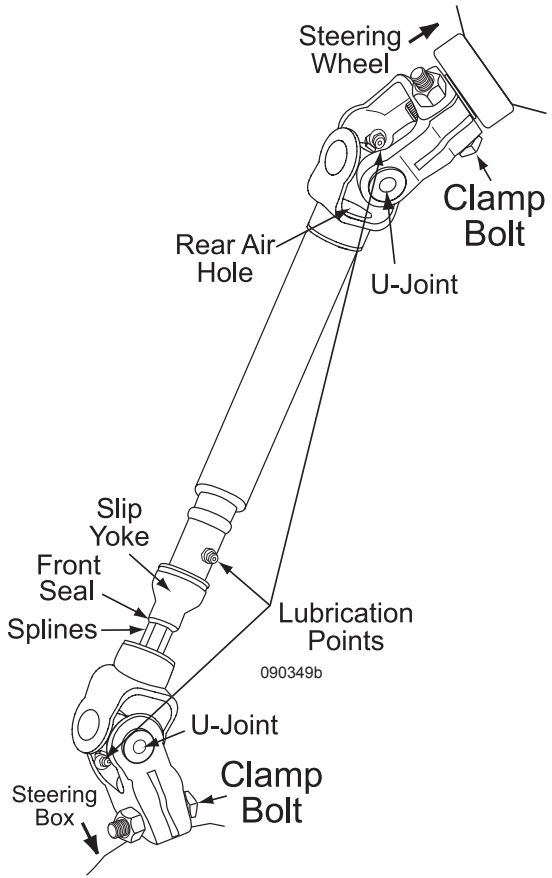

Intermediate Steering Shaft: Torque clamp bolt to 48 ft. lbs. for 3/8" and 75 ft. lbs. for 7/16".

Greasing the Intermediate Steering Shaft Universal Joints:

- Check the shaft for looseness. Repair if loose or worn.
- Apply the specified grease at the grease fitting on the universal joint. Apply until the new grease purges from all the seals.
- If the new grease does not purge from the seals, disassemble and clean the joint or replace the universal joint. Do not lose the needle bearings.

Greasing the Intermediate Steering Shaft Slip Yoke and Splines:

- Check the shaft for looseness. Repair if loose or worn.
- With finger, cover the rear air hole so grease flows to the front seal. Apply the specified grease at the grease fitting on the slip yoke. Apply until new grease purges and forces finger away from the air hole in the end of the slip yoke. Greasing interval is yearly or every 30,000 miles.

Drag Link

The drag link connects the steering box pitman arm to the steer axle. The movable joint (ball joint) uses sealed boots to prevent water intrusion. Do not rupture the boot when applying grease. Grease interval is six months or every 5,000 miles.

NOTE:
It will be necessary to start the motorhome and turn the steering wheel to access fitting(s).

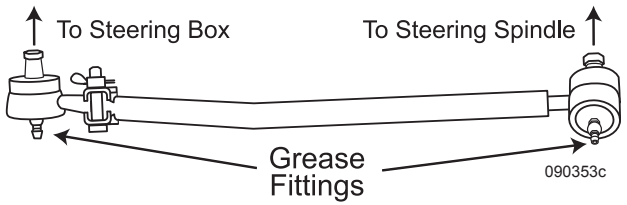

Center Link

The center link is located on the backside of the steer axle. The center link attaches the two wheels together causing the right front to track with the left front. Greasing interval is every six months or 5,000 miles.

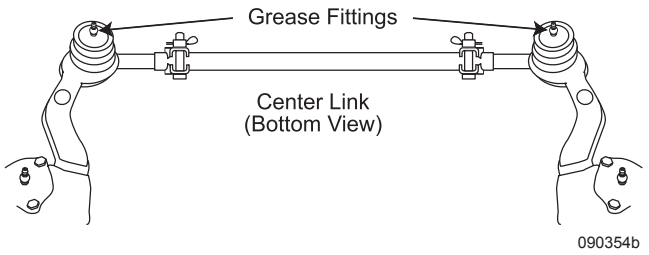

Steering Spindles

The steering spindles attach to the front axle and pivot on the kingpin. The wheel end assembly and brake system attach to the spindle. There are upper and lower lubrication points for the kingpin. The drag link attaches to the roadside spindle. After initially lubricating the roadside and curbside kingpins, rotate the steering assembly lock to lock (full left to right) then move assembly back to center. This purges any remaining air pockets. Continue lubricating the kingpins until new grease purges with no air pockets. Greasing interval is every six months or 5,000 miles.

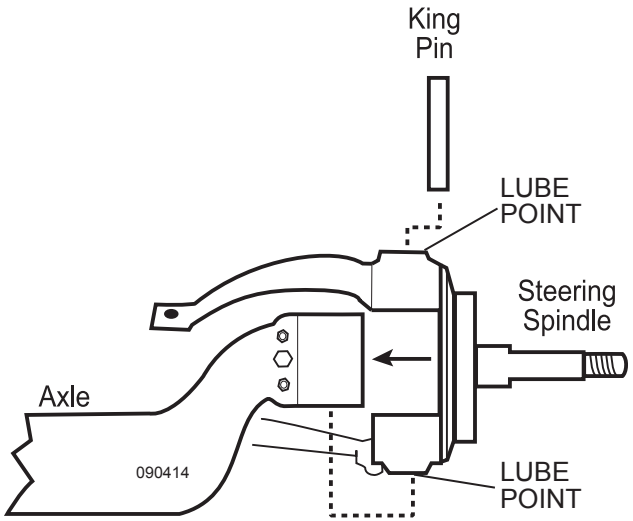

Control Arm Bushings

Control arms align the axles perpendicular with the frame. The panhard bar controls side to side motion of the axles in the frame. Control arm bushings and panhard bar bushings do not require lubrication.

Drum Brake Lubrication

Drum brakes are equipped with slack adjusters. Both the slack adjuster and brake cam need to be lubed periodically to ensure proper brake operation. Lubricate every 10,000 miles or three months, whichever occurs first. Use NLGI #2. Lithium soap base chassis lubricant. Lubricate at points shown and lubricate until new grease appears at exit points. Avoid contaminating brake linings with lubricant.

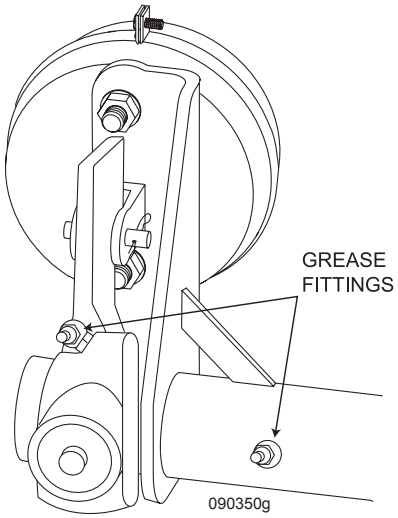

Front Brakes

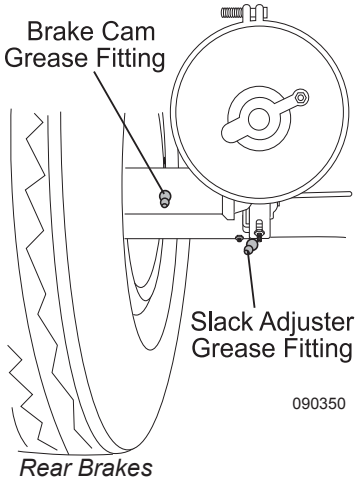

Rear Brakes

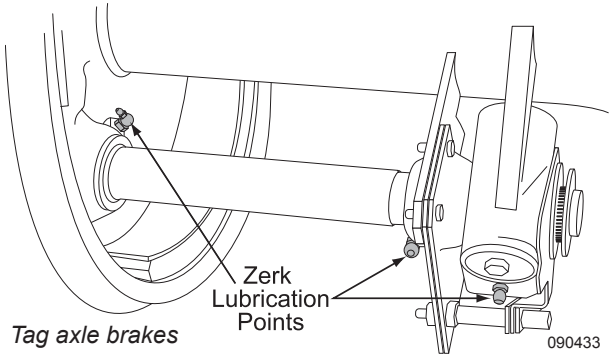

Tag axle brakes

Steering Gear

The steering gear has been designed to provide long service life and simple service repair. The rack and sector shaft do not require center point adjustment. The clearance between the cylinder bore and the piston is closely controlled and a piston ring was added to increase performance. With care and periodic maintenance, the steering gear will provide many miles of reliable performance. The bleeder valve is used on initial installation and replacement.

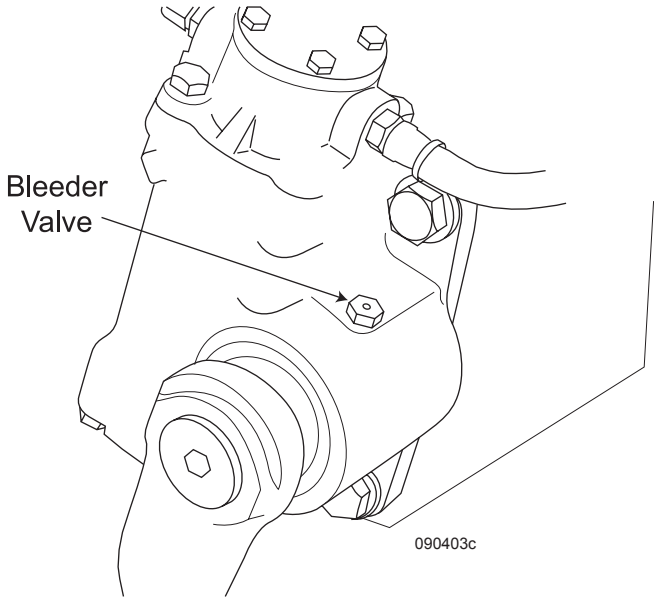

Power steering is provided by using hydraulic pressure to assist rotating the output shaft of the steering gear. Located at the end of the input shaft of the steering gear is a poppet valve and worm drive. The poppet valve directs the hydraulic fluid pressure to a type of spool. The worm drive threads in the center of the spool. When in the center position, pressurized hydraulic fluid bypasses the spool.

When a turn is made, the poppet valve shifts to one direction or the other, directing the hydraulic pressure to one side of the spool depending on turning direction. The hydraulic fluid is then cooled before returning to the reservoir.

NOTE:
Inspect for signs of leakage when performing fluid level checks.

Changing the hydraulic filter in the engine compartment at regular intervals will help ensure trouble-free operation.

DRIVE AXLE & DRIVE SHAFT

Drive Axle:

The drive axle is a single reduction axle. The differential gears consist of a hypoid pinion and ring gear set and bevel differential gears. The differential carrier can be removed from the axle housing as a unit in order to perform repairs.

All power from the engine to the rear tires is transferred through the rear axle. For this reason, it is important that maintenance be performed on the axle as required to avoid premature wear of the gears and bearings in the axle.

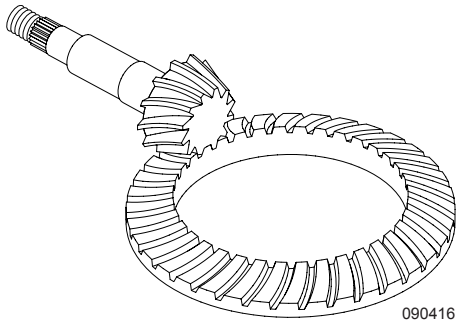

Ring and Pinion Gears

Drive Axle Lubricant:

The rear axle is filled with non-synthetic gear oil meeting MIL-L-2105D specifications. Change interval is every 250,000 miles or 36 months, whichever occurs first.

There may be fine metal particles attached to the magnetic fill and drain plugs when the lubricant is changed. These are normal wear particles from the axle components. These particles can accelerate wear if the fluid is not changed at the suggested intervals. It is recommended that the magnetic plugs be tested, if not replaced, at each lubricant change. These plugs should have sufficient magnetic strength to pick up a 1.5 pound weight of low carbon steel. Do not replace a magnetic plug with a non-magnetic “pipe plug” as they will not attract metal particles or seal properly.

The level of lubricant in the rear axle should be checked every 30,000 miles or 6 months, whichever occurs first. This will ensure adequate lubricant level in the axle and alert of a leak if the level is low.

WARNING:
Do not allow anyone under the motorhome without first properly blocking frame (jackstands) from coming down in case of rapid deflation of air system.

Proper Drive Axle Lubricant Level:

- With the motorhome parked on a level surface and rear axle warm, place a large container under axle.
- Clean the area around the fill plug, which is located approximately halfway up the axle housing bowl.
- Remove the fill plug and observe the lubricant level.
- The lubricant should be level with bottom of the hole.
- Important: Lube level close enough to the hole to be seen or touched is not sufficient. The lube must be level with the hole.

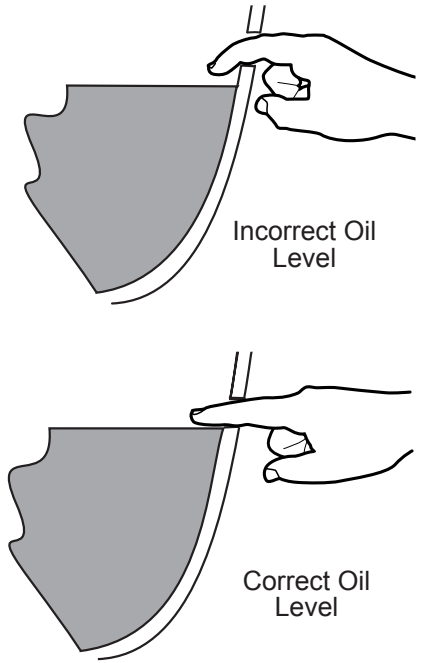

- Correct the level as necessary.
- Re-install the fill plug and tighten to 35 to 50 ft. lbs.

To Drain and Replace Lubricant:

1. Place a large container under the axle.
2. Remove drain plug and allow axle to completely drain.
3. Properly dispose of oil.
4. Clean the drain plug and test (replace the drain plug if needed).
5. Install and tighten drain plug to 35 to 50 ft. lbs.
6. Clean the area around the fill plug from the axle-housing bowl.
7. Fill the axle with approved lubricant until the level is even with the bottom of the fill plug hole.

WARNING:
When checking or changing the lubricant, always ensure that the axle is not hot. Oil temperature 90º F. or hotter can easily cause severe burns.

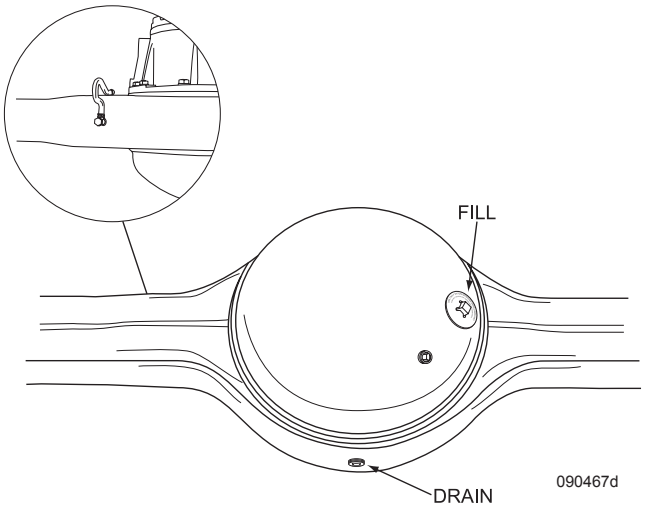

NOTE:
When checking the lube level also check the housing breathers on top of axle housing. Clean the breathers if dirty or replace if damaged.

Drive Shaft:

The drive shaft transfers the power produced by the engine to the drive axle. A worn or out of balance drive shaft causes chassis vibration that generally increases in intensity with road speed.

Lubrication Maintenance:

The drive shaft requires periodic lubrication maintenance. Lubricate the slip joint and universal joints every 5,000 miles or 6 months, whichever occurs first. Use NLGI #2 chassis lubricant.

NOTE:
It will be necessary to move the motorhome forward or backward to access all fittings on the drive shaft.

Greasing the Drive Shaft Universal Joints:

- Check the drive shaft for looseness. Repair if loose or worn.
- Apply the specified grease at the grease fitting on the universal joint. Apply until new grease purges from all the seals.
- If new grease does not purge at the seals, loosen the bearing cap bolts and re-grease until all four caps purge. If new grease still does not purge, disassemble and clean or replace the universal joint.

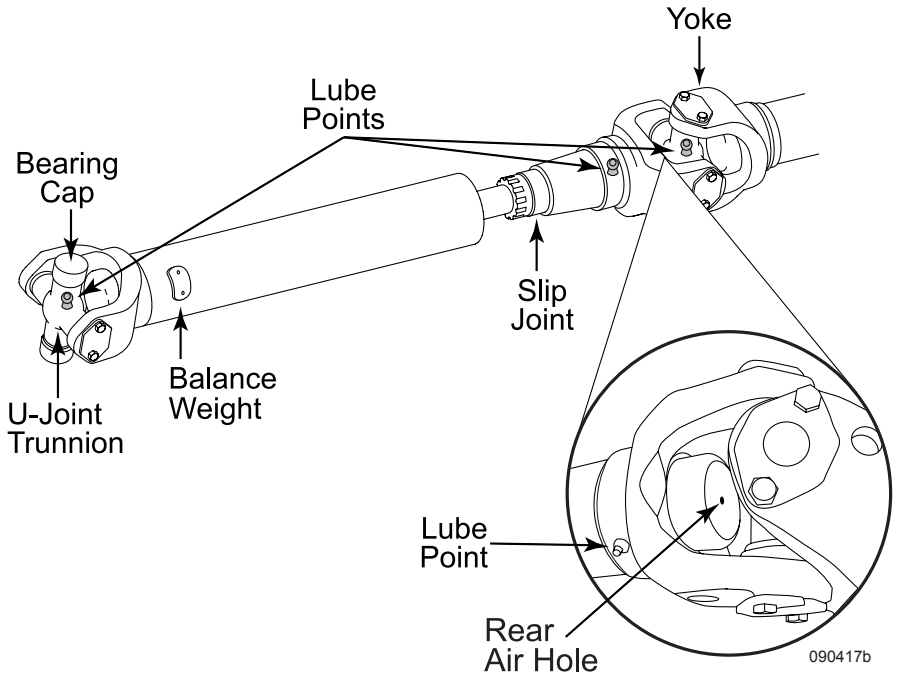

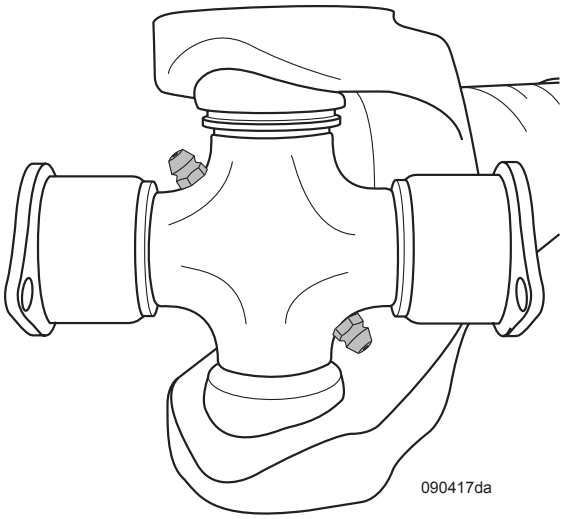

Dual Zerk U-Joint

NOTE:
Depending upon application, universal joints may have two grease fittings each. It is necessary to apply grease to each fitting to properly lube the universal joint.

Greasing the Drive Shaft Slip Yoke and Splines:

- Check the drive shaft for looseness. Repair if loose or worn.
- With finger, cover the rear air hole so grease flows to the front seal. Apply the specified grease at the grease fitting on the slip yoke. Apply until new grease purges and forces finger away from the air hole in the end of the slip yoke.

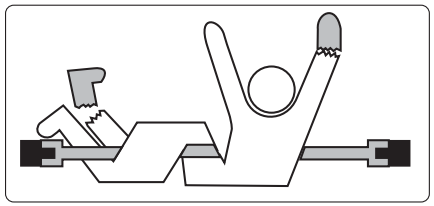

WARNING:
Rotating shafts can be dangerous. Rotating shafts can snag clothes, skin, hair, hands, etc. causing serious injury or death. Do not work on or near a shaft with or without a guard when the engine is running.

TAG AXLE

Tag Axle Operation

The tag axle air spring release (air bag deflate) function is integrated into the air leveling control panel. This feature uses a two minute delay at each ignition cycle to ensure sufficient air system pressure is available. After starting the engine, press the Travel button to begin the time delay. After approximately two minutes, the LED next to the tag axle button will stop flashing indicating the time delay is over.

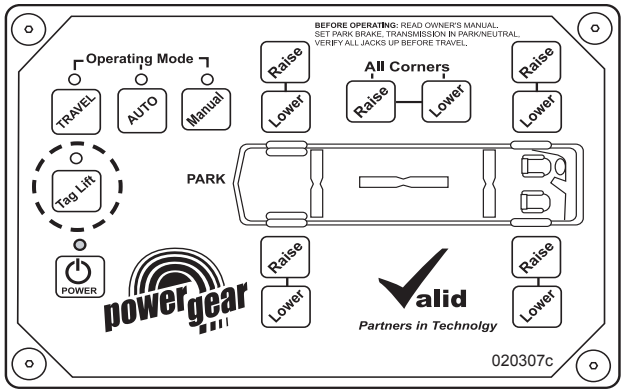

Deflating the tag axle air springs will help reduce scuffing of the tag axle tires when performing tight maneuvering at speeds below 5 mph. The tag axle air springs will inflate automatically at approximately 10 mph.

To Deflate the Tag Axle:

- Start the engine.
- Press the Travel button on the air level control panel.
- Allow time for the LED next to the Tag Lift/Tag Dump button to stop flashing.
- Push the Tag Lift/Tag Dump button to deflate the tag axle air springs.
- Push the Tag Lift/Tag Dump button to inflate the tag axle air springs.

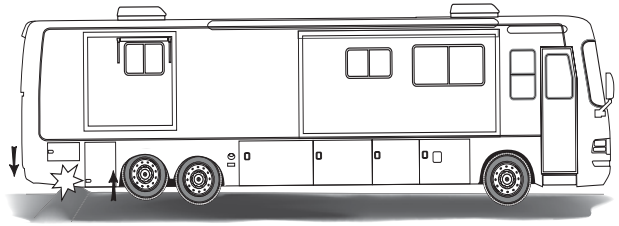

CAUTION:
Deflating the tag axle air springs will reduce ground clearance. Deflate tag axle air springs only when on firm level surfaces.

Adjusting Tag Axle Load

Changing the amount of weight carried by the tag axle affects weight distribution between the tag, drive and steering axles. The amount of down force applied to the tag axle is controlled by the amount of air pressure in the tag axle air bags.

An adjustable pressure regulator compartment sets the amount of air pressure in the tag axle air springs.

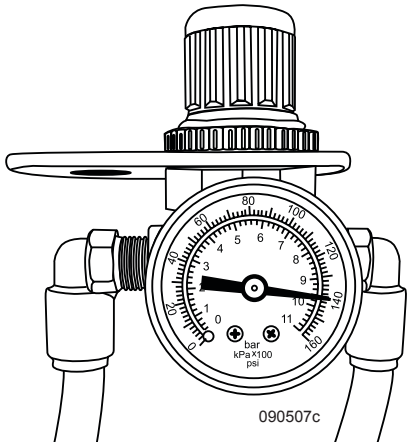

Tag axle regulator located in rear curbside compartment

The pressure regulator is preset at the factory determined by weighing the motorhome in "as shipped" condition. To determine the correct setting of the pressure regulator, weigh the motorhome after it has been loaded for travel. Refer to Section 2, ***"Weighing the Motorhome,"*** for more information.

NOTE:
The tag axle pressure regulator is located in the rear curbside compartment.

Tag Axle Lubrication

All tag axles use oil to lubricate the wheel bearings. The oil is drained and refilled without removing the wheel end assembly. Remove the hubcap to access the bearing cover and drain plug.

INSPECTION:
Inspect the oil level before every trip and every 5,000 miles. The motorhome should remain motionless for at least 30 minutes in order to stabilize the oil level before inspecting.

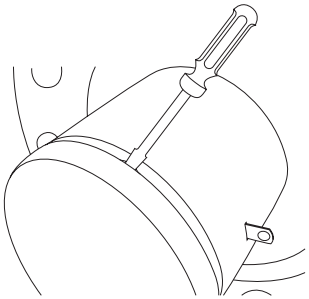

To inspect the oil level:

- The motorhome must remain stationary for 30 minutes.
- Remove the chrome hubcap.
- Locate the full and add mark on the outside of the clear plastic cover.
- If the lubricant is low, add recommended fluid to proper level.

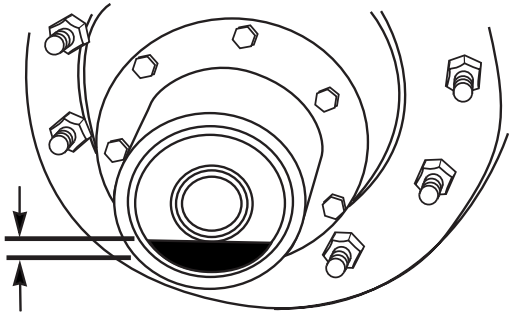

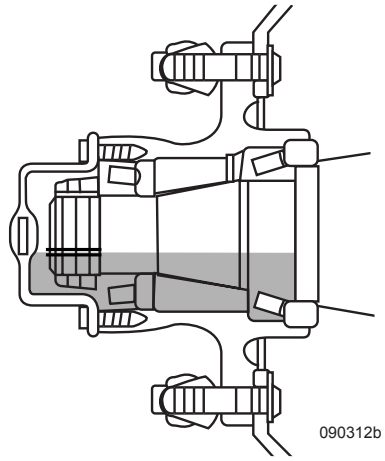

Shading Indicates Correct Amount of Oil

Oil Change Intervals

The recommended oil change interval is based on operating conditions, speeds, and loads. Limited service applications may allow the recommended interval to increase. Severe applications may require the recommended interval to reduce. For more information, contact a Dana/Eaton service representative.

Recommended Interval Change:

- Change the fluid whenever the seals are replaced, the brakes are relined, or at 30,000 miles (48,000 km). However, check the lubricant twice a year (spring and fall) for contamination. Change as needed.
- If yearly mileage is less than 30,000 miles, change the fluid twice a year (spring and fall).

Lubricant Type:

- Texaco Star Gear Lubricant SAE 80w/90. Specifications, minimum ambient temperature - 15º F (-26.1º C). There is no maximum ambient temperature. Lubricant temperature must never exceed 250º F (+121º C).

To Drain:

- Place a suitable container below the bearing cover and remove the drain plug. If the cover does not have a drain plug, remove the screws retaining the cover plate to drain the lubricant.
- Replace plug or cover plate and fill bearing assembly with the recommended lubricant.

SHOCK ABSORBER

The shock absorber is a hydraulic device used to dampen suspension/ body movement. Road surface irregularities are compensated by the shock absorber. The Roadmaster chassis incorporates the shock in the design of the exclusive air glide suspension system. This shock absorber is a telescopic, mono tube unit filled with nitrogen gas and hydraulic oil. The result of the mixture is uninterrupted damping for the smallest of wheel deflection.

By design, a self-lubricating seal is used that will allow approximately 10% of the total oil capacity to pass onto the piston rod. The gradual process of oil loss does not affect the performance of the shock absorber during the service life. This process will be evident after a long period of service by an oil film on the body of the shock absorber. The appearance of a coating or film on the body or rod is completely normal, it is an indication the shock is functioning normally.

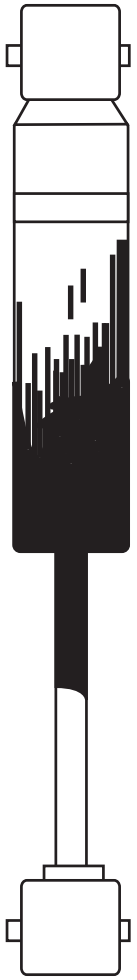

090315

Road holding, handling, balance and braking characteristics all can be contributed to the shock absorber. The operating conditions for which the shock absorber must endure will determine the life span. However, since the only moving part is the piston rod, there are no springs, hinges or pins to wear out, get weak or deteriorate.

LEVELING - AIR

The system operates in automatic level mode or can be set to manual level mode. The engine must be running when leveling in automatic or manual modes.

INFORMATION:
Refer to the OEM leveling system manual for detailed information.

NOTE:
Prior to leveling, extend slideout room(s) with the motorhome supported by the air suspension.

NOTE:
The automatic leveling system will perform best if there is no movement in the motorhome during the leveling process.

CAUTION:
Several inches of unobstructed downward travel is required when using the leveling system. Look underneath the motorhome for any obstacles that could damage the undercarriage or mud flap(s) prior to leveling.

WARNING:
Do Not engage the leveling system if anyone is near or underneath the motorhome. Serious injury or death can occur.

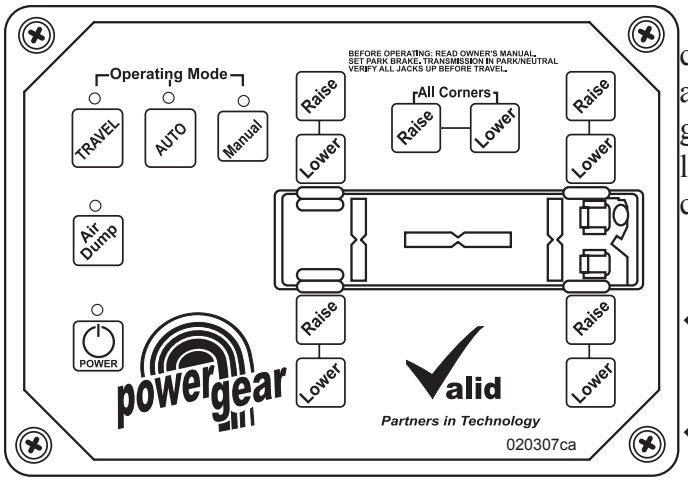

Automatic Air Leveling

Leveling Procedure:

- Start the engine.
- Set the park brake.
- Place the transmission in neutral.
- Point front wheels straight ahead to avoid possible body damage.
- Press the Power button on the leveling control panel to turn the system on. The Power indicator light will illuminate.
- Press the Auto button to begin the automatic leveling process.

The system will initially check degree of angle along the longitudinal axis of the chassis to ensure sufficient suspension travel for leveling. The indicator light above Auto will blink and the motorhome will begin the leveling process. Red lights in the motorhome icon indicate that position of the motorhome is low. The system will attempt to level by lowering the highest points to achieve level with the low point.

If unsuccessful, the system will raise all corners then attempt to level again. When all lights in the motorhome icon turn solid green, the motorhome is level. When the leveling process is complete, leave the control panel on and shut the engine off.

After leveling:

- Control panel power remains on. The system will go into "Sleep" mode after 15 seconds.
- After 20 seconds, the system will go into "Low Power" mode indicated by the occasional flashing of the Auto and Power lights.
- The system will "awaken" periodically to check if leveling adjustments are required.
- If adjustments are required, the system will automatically level the motorhome then return to Low Power mode.

NOTE:
Turning off the control panel after leveling will disable the system and not allow automatic leveling adjustments.

System Air Compressor:

The air system on the motorhome supplies air pressure during the initial leveling procedure. A small air compressor and reservoir tank is mounted to the firewall to supply the leveling system with air pressure should the system need to make any future leveling adjustments. This compressor requires no maintenance but the reservoir will need to be occasionally drained of moisture.

Manual Air Leveling

Manual leveling mode allows the operator to control the leveling process.

Leveling Procedure:

- Start the engine.
- Set the park brake.
- Place the transmission in neutral.
- Point front wheels straight ahead to avoid possible body damage.
- Press the Power button on the leveling control panel to turn the system on. The Power indicator light will illuminate.
- Press the Manual button.

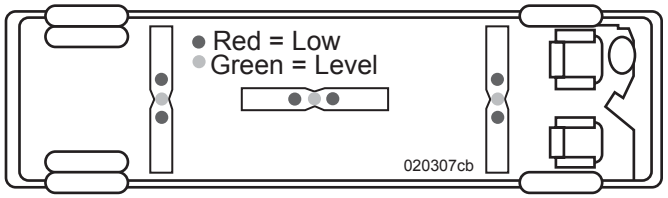

Using the red (indicates low) and green (indicates level) indicators in the motorhome icon, press Raise or Lower respective to each corner that requires adjustment. The motorhome is level when all indicators are green. To simultaneously control all four corners, use the All Corners Raise or Lower buttons. Turn the control panel off and shut off the engine.

Travel Mode

The air suspension will need to be inflated to 'Ride Height" prior to travel. The Travel button returns control of the air suspension to the height control valves. Initiate Travel mode prior to moving the motorhome. It may take several seconds for the motorhome to achieve full ride height once in Travel mode.

WARNING:
The time required to achieve ride height varies. Make sure the motorhome is at ride height prior to moving the motorhome. If the motorhome is not at ride height, severe damage can occur to the drive train and body work.

To Initiate Travel Mode:

- Start the engine and press the Travel button.

If the engine is started and park brake released, the leveling system will automatically switch to Travel mode. It will still require a period of time for the motorhome to achieve normal ride height. Enter Travel mode prior to moving the motorhome.

Service

The air leveling system includes an auxiliary compressor and air tank. Manually drain the air tank once a month or more depending on operating conditions and humidity levels. The drain is located roadside in the generator compartment. Open the drain valve until all air is released from the tank.

CAUTION:
Always wear safety glasses when draining the tank as air will be expelled under pressure.

LEVELING - HYDRAULIC (OPTIONAL)

The leveling system is used to stabilize the motorhome when parked. A leveling control panel operates the leveling system. The leveling system hydraulic pump also operates the front roadside and curbside (if applicable) slideout rooms.

CAUTION:
Do not use a single jack to level the motorhome. Ensure all jacks are in contact with the surface when leveling. Using a single jack to level can apply excess torsion twist to the chassis frame. Damage to the motorhome and related components can result.

CAUTION:
Do not use the leveling system to elevate any wheel position. Do not use the leveling system to change tires.

WARNING:
Do not access the underside of the motorhome when the leveling system is turned on or operating. Serious personal injury or death can occur.

Safety Features:

The leveling system has safety features that prevent a jack from extending during travel. The control panel will not activate until these safety features are in place:

- The engine is running.
- Transmission is in neutral.
- Park brake is applied.

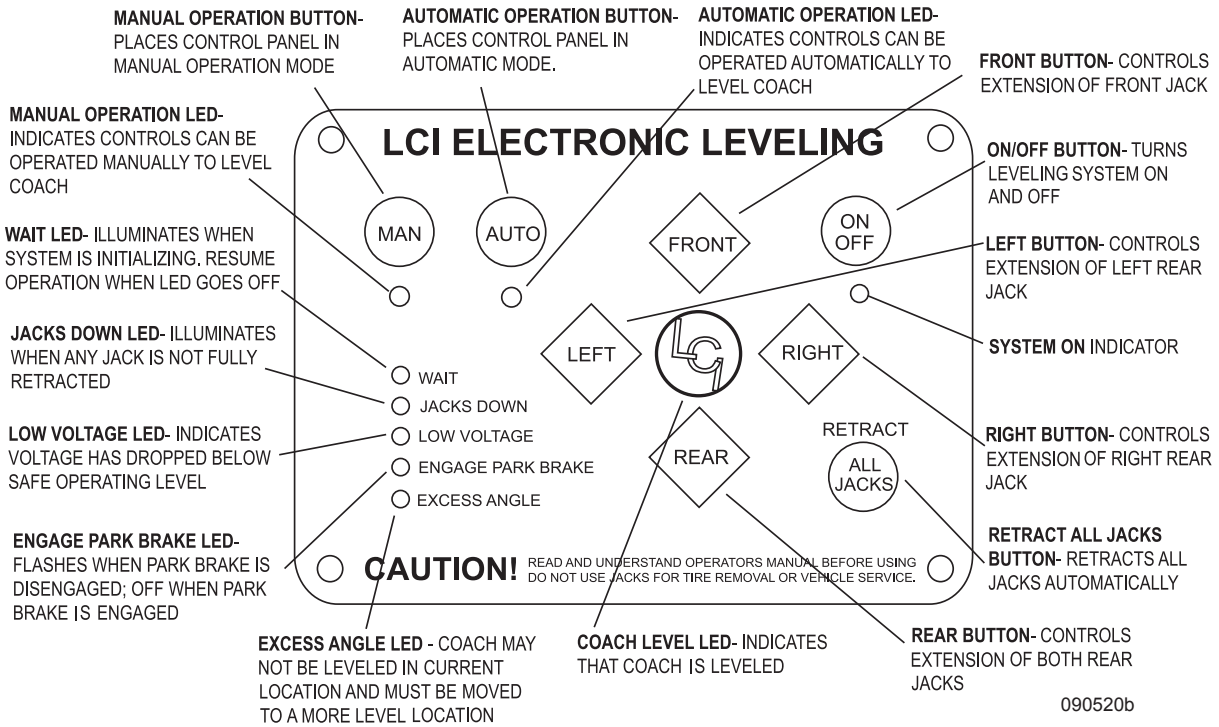

Warning Features:

- Lights on the control panel will flash and alarm will sound if a jack is extended, the ignition is turned on and park brake released.
- Excess Angle indicator illuminates if a site is excessively off level that it requires a jack to hyperextend or if leveling could cause excess torsion twist to the chassis frame.
- Should the Jacks Down alarm activate momentarily when driving over rough roads and corners, this could be caused by a low fluid level in the reservoir.

Control Panel:

The control panel includes an On/Off button, 4-position jack extend buttons, an Auto (automatic) button, a Man (manual) button, and an All Jacks retract button.

CAUTION:
Do not move the motorhome while jack(s) are extended or in contact with the ground. Damage to jacks and/or jack mounts can occur.

Prior to Leveling

Before lowering the suspension, survey the area around and under the motorhome for obstructions that can damage the motorhome or undercarriage components. Damage to the mud flap can occur if located over a raised area.

- Clear all debris and obstructions of jack landing points. Location must also be free of depressions before operation.
- Ensure people and pets are clear of the motorhome and surrounding area during leveling system operation.
- Do not expose hands or other parts of the body near hydraulic leaks. The hydraulic system operates at high pressure. Hydraulic leaks can cut and inject hydraulic fluid causing serious injury.

CAUTION:
Surfaces such as hot asphalt, gravel or dirt may not be stable enough to support the weight. Place thick plywood under the jack pads to help disperse weight. Place a wheel chock at the opposite corner to help prevent the motorhome from rolling if blocks are placed under a jack to gain additional height.

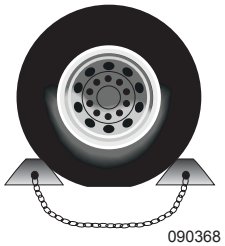

Example of a properly chocked wheel

NOTE:
If additional height or surface support is needed, construct a 1' x 1' wooden block made from two pieces of ¾" plywood for a total thickness of 1½". Drill a hole in corner and use the awning wand to slide the wooden block under the jack pad.

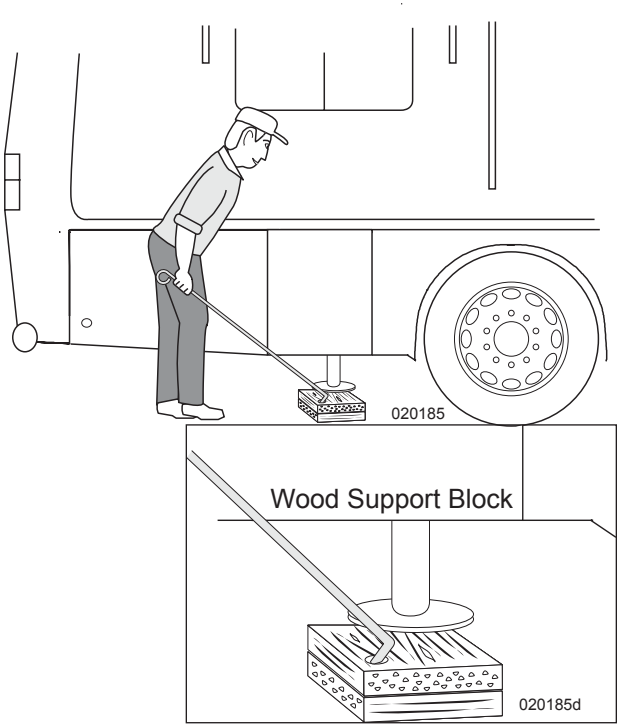

Automatic Leveling

- Extend slideout rooms only when the motorhome is supported by the air suspension. See ***"Slideout Operation"*** in Section 5.
- Park on a solid, reasonably level surface.
- Apply the park brake.
- Place transmission in neutral and shut the engine off.
- Turn ignition key to on. Do not start the engine. Lower air suspension by stepping on the brake several times until air pressure is approximately 60 psi. With ignition on, press and hold the Air Dump switch to deflate the air springs. This reduces jack travel before contacting the surface.

- Start the engine. The engine must be running for the leveling system to operate properly.
- Press the On/Off button to turn the system on. If the Excess Angle light illuminates, another site must be selected before the leveling system will operate.
- Be sure all people and pets are clear of the motorhome and surrounding area.
- Press and release the Auto button. The system will begin automatic leveling.

Please follow these tips
each time you operate your leveling
system for optimum performance:

1. Start your motorhome's engine and leave it running.

2. Be sure your batteries are fully charged.

3. Turn off all lights and other electrical elements during operation.

4. Minimize movement inside the coach when you are in auto leveling mode.

If you have questions or need assistance,
please contact Lippert Customer Service at 1-866-524-7821
090524

NOTE:
The leveling system is sensitive to movement during automatic leveling. The system may determine an inaccurate state of level if movement is not restricted during the automatic leveling cycle.

- The LCI logo will illuminate when the automatic leveling cycle is complete.
- Press the On/Off button to turn the system off.
- Shut off the engine.

Manual Leveling

- Extend slideout rooms only when the motorhome is supported by the air suspension. See ***"Slideout Operation"*** in Section 5.

WARNING:
The Excess Slope feature is disabled in manual mode. Do not apply excess torsion twist when leveling. Damage to the motorhome and related components will result.

- Park on a solid, reasonably level surface.
- Apply the park brake.
- Place transmission in neutral and shut the engine off.
- Turn ignition key to on. Do not start the engine. Lower air suspension by stepping on the brake several times until air pressure is approximately 60 psi. With ignition on, press and hold the Air Dump switch to deflate the air springs. This reduces jack travel before contacting the surface.
- Start the engine. The engine must be running for the leveling system to operate properly.
- Press the On/Off button on control pad.
- Press and hold the Man (Manual) button for approximately five seconds.
- Press the Front jack button until front jack contacts the ground.
- Push the Rear button until rear jacks contact the ground.

NOTE:
When manually leveling, level front to rear first. After the motorhome is level front to rear, level the motorhome left to right.

- The right and left buttons are used to level the motorhome side to side. Pressing the Left button will extend the left rear jack. Pressing the Right button will extend right rear jack.
- Repeat steps as necessary to obtain level.
- Turn the control panel off when level is achieved.
- Shut off the engine.

Jack Retract Procedure

Retract the slideout rooms only when the motorhome is supported by the air suspension. See ***"Slideout Operation"*** in Section 5.

- Start the engine.
- Ensure the park brake is set.
- The transmission is in Neutral.
- Press the On/Off button turn the system on.
- Press the All Jacks retract button. The jacks will automatically return to fully retracted position.
- The Jacks Down light will go out when all jacks have retracted.
- Push the On/Off button to turn system off.

NOTE:
The All Jacks retract button must be pressed and held if the system is set to manual mode. With the system set to Auto mode, momentarily press All Jacks retract. The jacks will fully retract.

WARNING:
Visually ensure all jacks have fully retracted prior to moving the motorhome. Remove any debris that may be on the jack pad.

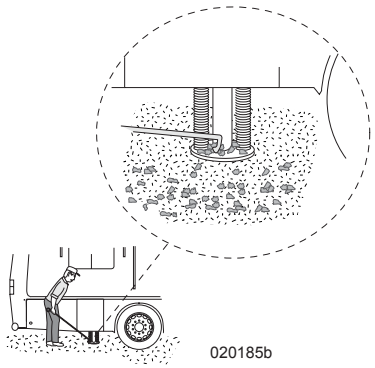

Low Voltage Light:

- If the Low Voltage light is flashing, leveling system voltage is low. Start the engine.
- If Low Voltage light is solid, turn the ignition off then start the engine to reset the system.

Drive-Away Protection:

If the park brake is released while the engine is running and the jacks are extended, all control panel indicator lights will flash and the alarm will sound. The system will automatically begin retracting the jacks until all jacks are fully retracted or the parking brake is set.

Safety Shutoff:

- The control panel will turn off automatically when the system has been inactive for four minutes.
- To reset the system, the ignition must be turned off then back on then press the On/Off button.

Jacks Fail to Extend or Retract

- Ensure the park brake is set.
- The transmission is in neutral.
- The engine is running.
- If the control panel does not operate, check the 15 Amp inline fuse located with the leveling system wiring approximately 16” from the hydraulic pump.

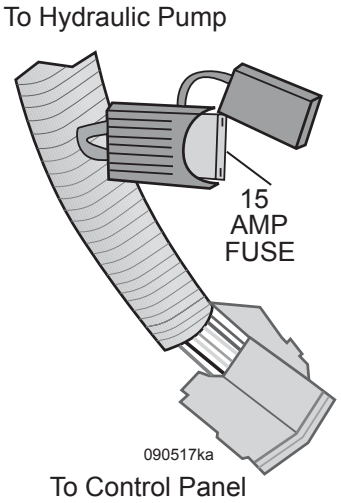

NOTE:
The hydraulic pump has an internal circuit breaker to protect against overheating. If the pump is used repeatedly in a short period, the breaker will trip and reset automatically in 5 to 30 minutes.

Control Pad Lockup

The control pad may “lockup” (latched error) indicated by all error modes flashing on the control panel. The control pad will not respond to commands until a control pad “reset” has been performed.

To Reset the Control Pad:

- Simultaneously press all 4 control (Front, Rear, Left and Right) functions.

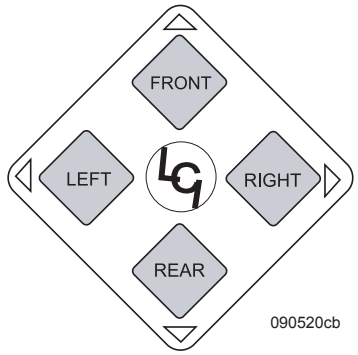

Maintenance

- For protection, it is recommended to use silicone spray on exposed jack rods every seven days.
- If the motorhome is located in a salty environment, it is recommended to spray the rods every 2 to 3 days.
- Remove dirt and road debris from the jacks as needed.
- Do not use grease on the rod as this will attract dirt which can damage seals.

Checking/Adding Hydraulic Fluid

- The system uses Dexron/Mercon Type A automatic transmission fluid.
- Check the fluid level monthly. Fill reservoir within ½" of reservoir spout.
- Chock a wheel fore and aft for safety.
- Retract all jacks and slideout rooms. Filling the reservoir with jacks extended will cause the reservoir to overflow when jacks are retracted.
- Make sure breather cap is free of contamination before removing, replacing or installing. Do not allow any contamination into reservoir during fill process.
- Replace the breather cap.
- Change fluid in reservoir every 36 months. It is not necessary to empty the entire system of fluid. Change only the fluid in the reservoir.

INFORMATION:
In colder temperatures (less than 10° F.) the jacks may extend and retract slowly due to increased viscosity.

Electrical Connections:

- Inspect and clean all hydraulic pump electrical connections every 12 months. If corrosion is evident, spray with WD-40 or equivalent.

Manual Override

Check the following items before attempting to manually retract the jacks.

- Engine is running.
- Transmission is in neutral.
- Park brake is applied.
- 15 Amp inline fuse next to hydraulic pump tests good.

If after verifying these conditions and the jacks will not retract, the jacks can be retracted manually. It will be necessary to access the hydraulic pump and control valves.

CAUTION:
Do not continue to run the hydraulic motor if the jacks do not retract. Damage to the motor can occur.

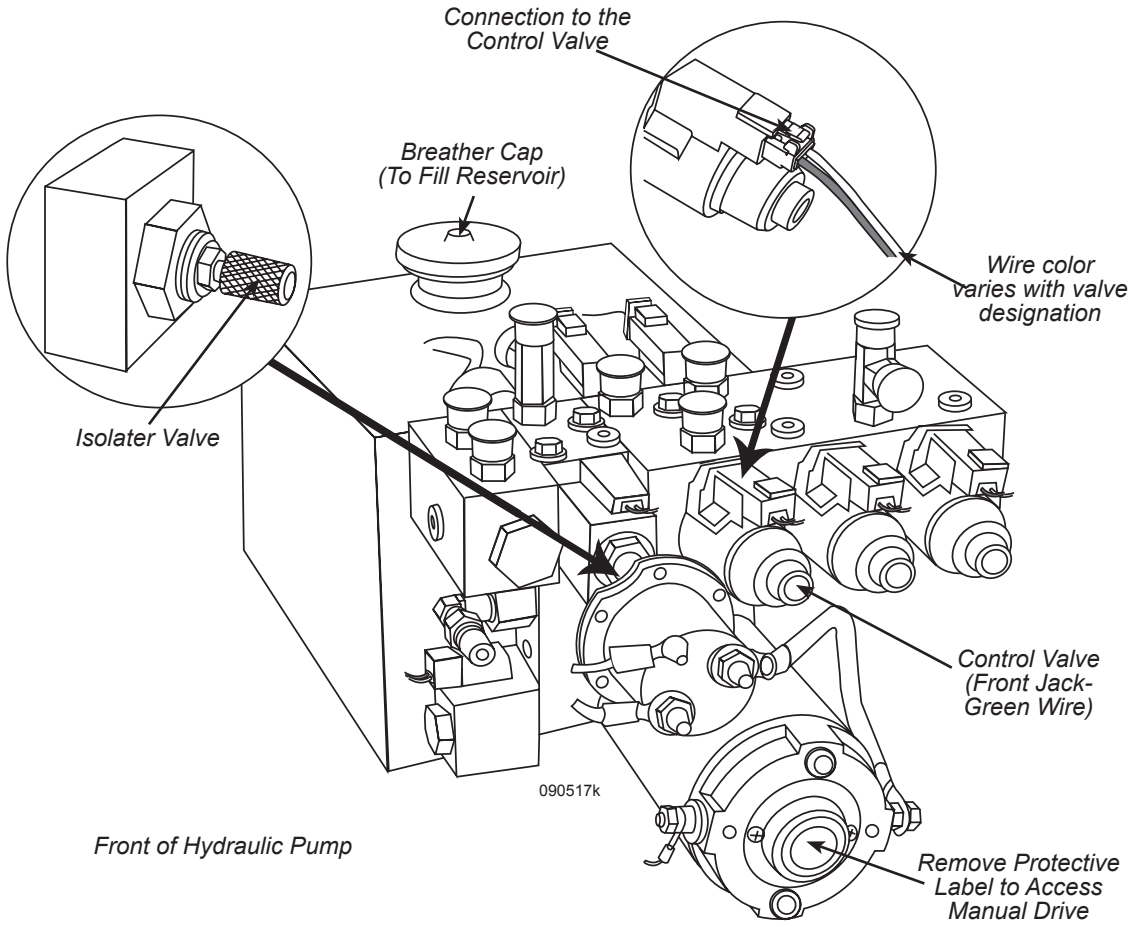

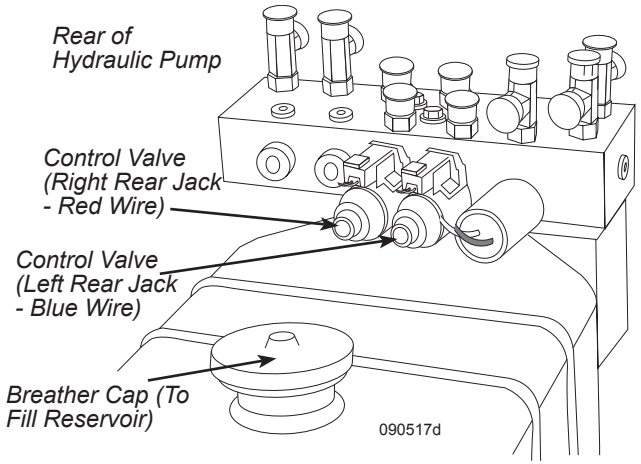

Control Valve Identification:

Each control valve operates a designated jack identified by the color of wire to the control valve:

- Green wire is the front jack.
- Red wire is the right rear jack.
- Blue wire is the left rear jack.

NOTE:
Jack control valve location in the manifold will vary slightly depending on number of slideout rooms operated by the hydraulic system.

Manually Retracting the Jacks:

- Turn off disconnect switches to chassis and house batteries.
- Locate respective control valve per corresponding jack.
- Insert 1/8” Allen wrench into control valve and turn inwards (clockwise).

NOTE:
Some control valves have a knurled knob instead of an Allen socket.

- Access manual drive coupler on motor located beneath label or plug.
- Attach a standard hex bit into an angle drill.
- Insert bit into drive motor coupler.
- Run drill counterclockwise to retract.
- When the jack is retracted, turn control valve(s) outward (counterclockwise) to lock jack in up position.
- Turn on both chassis and house disconnect switches.
- Take the motorhome to an authorized repair center.

ENGINE - GENERAL INFORMATION

The diesel engine operates differently from a conventional gasoline engine. Gasoline engines control engine speed using a butterfly throttle plate and controlling air/fuel mixture inlet flow. As the throttle plate opens, vacuum created by the piston velocity draws the metered fuel/air charge into the combustion chamber, then ignites from a controlled electric ignition source. Closing the throttle plate limits the fuel/air supply, slowing engine speed and increasing intake manifold vacuum.

The diesel engine in the motorhome controls engine speed by varying fuel supply only. No throttle plates are used. An exhaust driven turbine system (turbocharger) compresses the fresh air supply into the engine. The fuel is injected under pressure into the combustion chamber. Ignition of fuel/air charge occurs from heat generated by rapid high compression.

Diesel engine RPM (revolutions per minute) operating speeds are generally much lower than that of the gasoline engine. Peak torque and horsepower output values occur at much lower engine speeds. Idle speeds between the two engine types are similar, however maximum engine speeds are quite different. The gasoline engine generally is not regulated to a maximum engine speed. The maximum engine speed on a diesel engine is controlled by an engine speed governor set by the engine manufacturer.

WARNING:
Do not operate a diesel engine where there are or can be combustible vapors. Vapors can be drawn through the air intake system and cause engine acceleration and over-speeding, resulting in fire, explosion and extensive property damage. Numerous safety devices are available, such as air intake shutoff devices, to minimize risk of an engine over-speeding where an engine (due to its application) might operate in a combustible environment, such as fuel spills or gas leaks.

INFORMATION:
The equipment owner and operator is responsible for safe operation of engine. Consult the engine OEM manual or authorized repair location for more information.

STARTING PROCEDURE
Normal Starting

CAUTION:
To avoid starter motor damage, do not crank the engine for more than 15 seconds at one time. If the engine fails to start, wait two minutes before attempting to start the engine again.

WARNING:
Do not attempt to start the engine by "jumping" relays or any means other than using the ignition start switch. Do not attempt to start the engine unless all persons are clear of the engine before starting.

The engine is equipped with an intake manifold grid heater. The grid heater helps engine starting in cold weather. Intake manifold air temperature is monitored by the Electronic Control Module on the engine. If intake manifold temperature is below specified level, the manifold grid heater will activate. Grid heater activation is indicated by the **Wait to Start** indicator lamp.



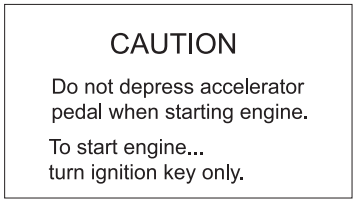

020328

To Start the Engine:
With the throttle in idle position, turn ignition to On. Allow the **Wait to Start** lamp to extinguish. Turn key to the start position. When the engine starts the grid heater may again energize as determined by the electronic control module. Water temperature should be up to normal operating range (190º F/88 º C to 228º F/109º C) before operating the engine under full throttle.

Cold Weather

In sub-freezing or extreme cold, engine oil viscosity increases and battery output (CCA) is reduced. Thick oil, combined with less amperage available from the battery, increases difficulty in starting the engine.

Depending on ambient temperature it may be necessary to pre-heat the engine. Located in the coolant passage in the engine is a heating element that operates from 120 Volt AC. If it is necessary to pre-heat the engine due to ambient temperature, it is recommended to plug in the block heater the night before, allowing several hours for the block heater to warm the engine.

It is possible to operate diesel engines in extremely cold environments when the engine is properly equipped with the correct lubricants, fuels and coolant. Cold weather operation can be defined in two categories: Winter and Arctic.

WINTER (32º to -25º F.) (0º to -32º C):
Use a 50% antifreeze to 50% water coolant mixture, use multi-viscosity oil meeting manufacturers specifications and fuel to have maximum cloud pour points 10º F. (6º C) lower than the ambient temperature in which the motorhome operates.

ARCTIC (-25º to -65º F.) (-32º to -52º C):
Use a 60% antifreeze to 40% water coolant mixture. Use oil meeting manufacturer specifications and fuel to have maximum cloud pour points 10º F. (6º C) lower than the ambient temperature in which the motorhome operates.

INFORMATION:
Refer to the engine OEM manual for information on proper fuels, lubricants and coolants for cold weather operation.

NOTE:
The engine is filled with 15-40w multi-viscosity oil from the factory. Generally this will start the engine in temperature down to 15º F. If the engine has normalized to a temperature below 15º F. it will be necessary to pre-heat the engine before starting.

CAUTION:
The starter may rapidly engage and disengage when cranking the engine in cold temperature. If this occurs, STOP attempting to crank the engine to prevent starter damage. Pre-heat the engine before making further attempts to start.

Block Heater:

The block heater is used to heat engine coolant to ease cold weather startup. For efficiency, hook to shore power or plug the block heater cord to a separate power cord rated for 15 Amps and a GFCI protected outlet rated at 20 Amps. The engine may require several hours of pre-heating before starting. It is recommended to start preheating the engine the night before departure.

To Use the Block Heater:

- Hook to shore power and plug the block heater cord into the block heater receptacle.

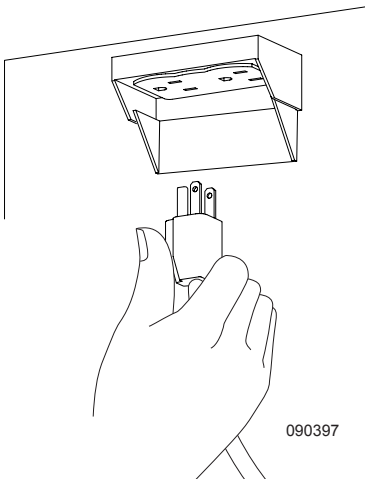

Located roadside rear compartment

Tips:

- When operating below 32º F., the block heater preheat can enhance engine starting by easing cranking and helping to prevent engine misfire and white smoke during starting.
- Always follow the recommended oil, fuel, and coolant specifications as outlined in the OEM Engine Manual. Proper oil viscosity and coolant concentration eases engine starting and helps to avoid engine damage.
- Allow the engine to idle until it sufficiently warms for operation. Utilize the fast idle feature to quicken the process. Wait to operate the motorhome for at least three minutes or until the coolant temperature begins to rise.
- Check the air inlet and filter daily, or as necessary, when driving in snow conditions.
- The demand on batteries increase during winter; check and service the batteries frequently to help ensure trouble-free starts.
- Start out slowly to allow time for the transmission and axle lubricants to circulate and warm before putting them under full load.

WARNING:
Do not use ether cold starting additives to start the engine. Engine damage and explosion can occur.

ENGINE OIL

Engine Oil Requirements:

Engine oil types and recommended change intervals are determined by the engine manufacturer. This information is listed in the engine OEM Operation & Maintenance manual located in the owners information file. Oil recommendations for the engine are due to emission requirements. Low emission engines have higher combustion chamber temperatures, use ultra-low sulfur fuel and are equipped with a diesel particulate filter.

A high-grade 15W-40 multi-viscosity heavy duty lubricating oil meeting American Petroleum Institute (API) specification CJ-4 is recommended. Lower viscosity oils designed for use in winter operations will aid in starting. Refer to the chart for oil viscosity recommendations based on ambient operating temperatures. A critical factor in maintaining engine durability and efficient emission system operation is through use of high quality, multi-grade lubricating oil and strict adherence to the maintenance service intervals as specified by the engine manufacturer.

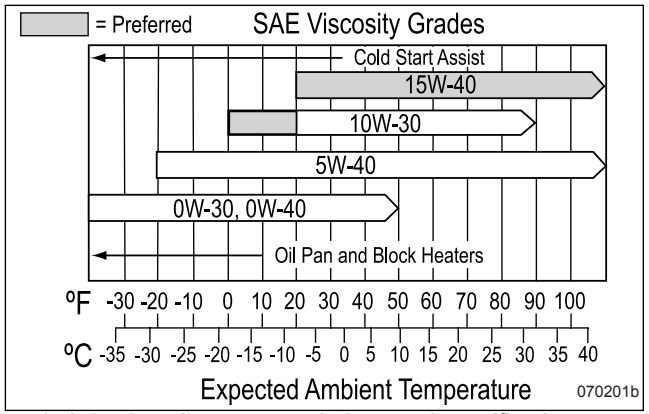

Lubricating oil recommendations and specifications.

A straight weight (mono-grade) lubricating oil is not recommended. Lubricating oil meeting API CI-4 may be used but with shortened drain intervals. Use of API CI-4 also increases soot loading of the diesel particulate filter.

The use of an oil analysis program to extend oil drain intervals is not recommended.

Synthetic oils such as API category II or III specifications may be used in extreme cold temperatures as long as they are approved by the engine manufacturer. Synthetic oils, or oil with adequate low temperature properties used for Arctic operations where the engine cannot be kept warm when shut down, will aid in starting. The use of synthetic oils should not be used to extend drain intervals. Extended oil change intervals can decrease engine life and possibly affect the engine warranty and emission systems.

Oil additives should not be used unless the oil supplier or oil manufacturer are consulted and provide positive evidence or data establishing satisfactory performance in accordance with the engine manufacturer.

NOTE:
The Engine is filled with SAE 15w-40 API CJ-4 multi-viscosity oil from the factory.

INFORMATION:
Refer to the engine OEM Operation and Maintenance manual for information regarding recommended oil change intervals.

ENGINE SHUTDOWN

Allow the engine to idle three to five minutes after a full load operation. This allows adequate cool down of pistons, cylinders, bearings and turbocharger components. Under normal driving conditions, exiting the highway is generally lighter engine operation and the need for the three to five minutes is not necessary.

Extended Engine Shutdown

When the motorhome is sitting for 30 days or more, verify all the fluid levels are correct. Follow the normal starting procedures. If the oil pressure gauge does not register within 15 seconds, shut off the engine immediately to avoid damage. Consult the engine OEM manual for guidelines on troubleshooting low oil pressure, or contact a qualified service technician. Allow the engine to idle for five minutes before operating under a load.

COOLANT SYSTEM

The coolant system is filled with a fully formulated extended life coolant. Coolant that is fully formulated contains balanced amounts of antifreeze, Supplemental Coolant Additive (SCA), buffering compounds, and clean, quality water. Antifreeze that is not fully formulated must be mixed with clean, quality water (distilled water preferred) in a 50/50 ratio (40 to 60% working range). This ratio will provide protection from -34º F. to 228º F. Antifreeze must be of low silicate content and must meet ASTM D6210.

The 50/50 ratio of antifreeze and clean quality water plus SCA must be premixed prior to being put in the cooling system. Placing antifreeze and then water in the cooling system is not recommended. Refer to the OEM Engine Manual for more information.

WARNING:
Do not continue engine operation if engine temperature rises above 220º F. At approximately 228º F., the Warning Triangle light on the dash will illuminate and the engine protection software will log an engine diagnostic trouble code. Turn the engine off as soon as possible as continued operation will result in severe engine damage. Correct the cause of the overheat condition before resuming operation.

CAUTION
An over-concentration of antifreeze will reduce freeze protection. Use of high silicate antifreeze can damage the cooling system and engine. SCA is required in the cooling system to inhibit cylinder liner pitting as a result of cavitation erosion.

Good-Quality Water:

Good quality water is important for cooling system performance. Excessive levels of calcium and magnesium contribute to scaling problems. Excessive levels of chlorides and sulfates cause cooling system corrosion.

Testing the Coolant:

A refractometer must be used to accurately measure the freezing point of the coolant. Do not use a floating ball hydrometer. Using floating ball hydrometers can give an incorrect reading.

Coolant System Sealing Additives:

Do not use sealing additives in the cooling system. The use of sealing additives will:

- Build up in coolant low-flow areas.
- Plug the radiator and oil cooler.
- Possibly damage the water pump seal.

Cooling System Soluble Oils:

Do not use soluble oils in the cooling system. The use of soluble oils will:

- Corrode brass and copper.
- Damage heat transfer surfaces.
- Damage seals and hoses.

Check the coolant level before each trip, refueling, and when checking the oil level. Coolant freeze point is checked at every oil change interval or as specified by the engine manufacturer. Coolant drain and flush intervals are specified by the engine manufacturer. Refer to the OEM engine manual for more information on service maintenance intervals.

Coolant Types:

- Use (preferred) fully formulated extended life coolant that meets ASTM D-6210/D-6211.
- Use a low-silicate antifreeze that meets ASTM 6210 standard.

INFORMATION:
For detailed information on engine coolants for refer to OEM engine manual for coolant requirements.

Engine Coolant Reservoir:

The engine coolant reservoir is connected to the radiator by a hose. Coolant heats and expands as the motorhome is driven. Coolant displaced by expansion overflows from the radiator into the reservoir. Coolant contracts as it cools and is drawn back in the radiator by a vacuum. Thus, the radiator is filled to capacity with coolant at all times to increase cooling efficiency.

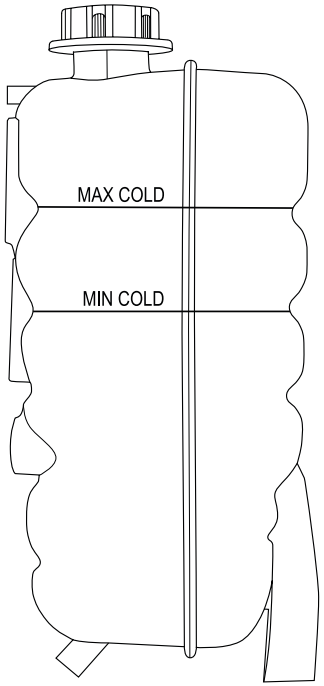

Coolant Reservoir 090447e

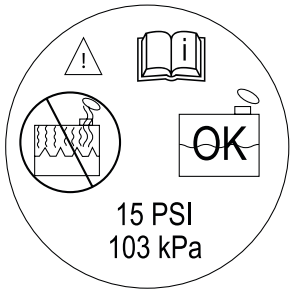

Reservoir cap is rated at 15 lbs. 090503g

The coolant level should be at, or slightly above, the appropriate mark on the reservoir tank when the system is cold.

The reservoir is marked MIN (cold check)/ MAX cold check). Maintain coolant between the appropriate reservoir indicators.

CAUTION:
Do Not remove the reservoir cap while the engine is running or if the engine is hot. Cap removal can result in severe burns and damage to the engine cooling system.

NOTE:
Be sure to replace cap after adding fluid.

Coolant Levels:

- Check coolant level before each trip, when refueling, and when checking the oil level.
- The Warning Triangle indicator lamp will illuminate on the instrument panel if coolant level drops below acceptable levels in the reservoir. Stop the motorhome and inspect the coolant level before continued operation.
- Coolant level (cold check) should remain between the MIN and MAX indicators on the reservoir when the cooling system is properly filled.

Supplemental Coolant Additive (SCA):

SCA is required to protect the cylinder liner/sleeve from cavitation erosion. Cavitation erosion is caused by minute air pockets that collect on the cylinder liner. The air pockets will pop (implode) during engine operation. Over time this can erode a hole through the cylinder liner. Supplemental coolant additives inhibit formation of the air pockets. The SCA content of the coolant is checked with Litmus paper. Test kits are available from the engine manufacturer as well as aftermarket. Litmus paper is time and light sensitive. Check the SCA content at each oil change following the directions in the test kit. Refer to the OEM engine manual for further information.

NOTE:
SCA test kits are time and light sensitive. Store test kit in a dry and dark location. Discard if out of date. Pink colored antifreeze may not be compatible with certain test kits.

Cooling System Maintenance:

Refer to the engine OEM manual for detailed information regarding cooling system service and maintenance intervals. Services include draining and replacing the coolant, flushing the cooling system, inspecting the water pump and standpipe and replacing the thermostat, gasket or seal.

Coolant Overheated:

The engine can overheat for a number of reasons. Before engine temperature reaches a critical point, it is preceded by illumination of dash indicator lamps as well as above normal temperature gauge readings. It is best to adhere to these indicators and take immediate corrective action before the engine is subjected to extreme heat and potential damage.

If the engine should begin to severely overheat, engine protection software will begin to decrease fuel regardless of throttle position (derate) to reduce heat created by combustion. Damage to the engine will occur if engine operation continues and cause of the overheat condition is not immediately corrected. At this point it is best to shut off the engine as soon as possible to avoid further engine damage.

WARNING:
It is advised to shut off the engine should the engine overheat. It may take several hours before engine temperature has lowered to a safe operating range. Do not remove the coolant reservoir cap as severe burns may result. Do not add cold water to an overheated engine as this will cause uneven rapid cooling and possibly result in further engine damage.

Freeze Protection:

Coolant freeze protection is checked using a refractometer for accuracy. This meter checks at what point the coolant begins to freeze. Refer to the engine OEM manual for test procedures.

Coolant System - Thawing:

If the coolant system becomes frozen, the motorhome must be towed. Place the motorhome in a warm area until completely thawed. If the engine is operated when the cooling system is frozen, the engine may overheat due to insufficient coolant circulation. Once thawed, check the engine, radiator and related components for damage caused by expansion of frozen coolant.

Coolant Hoses:

Inspect coolant hoses and connections when checking engine or transmission fluids. Look for any signs of chaffing at hose restraints or sharp edges. Indications that hoses have reached the end of service life include cracking or swelling around clamps and connections. Oil leaks can also deteriorate hoses.

Overheating can be caused by a collapsed hose. Old hoses can also deteriorate on the inside causing partial clogs and reducing cooling efficiency. Replace any hose that are cracked, swollen or damaged. Periodically check hose clamp torque.

Inspect:

Every 12 months - Inspect all hoses, clamps, and fittings for leaks due to cracking, softness and loose clamps/fittings. Look for signs of fluid leaks, damaged end fittings or ballooning; chafed, kinked, or crushed hoses, loose clamps and fittings. Correct any deficiencies found.

Radiator/Charge Air Cooler

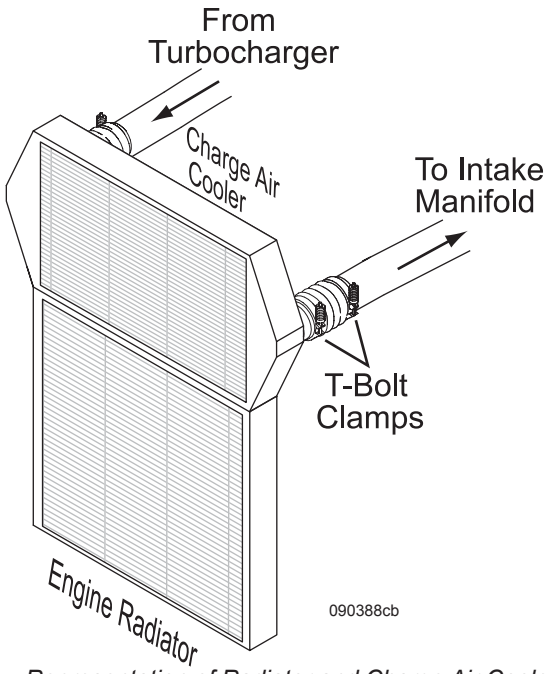

Representation of Radiator and Charge Air Cooler

The diesel engine uses compression to ignite the fuel/air charge. To increase compression inside the combustion chamber (resulting in increased power output) a turbocharger is added to the engine. The turbocharger is a paired housing assembly with impellers inside each housing connected by a common shaft. One impeller is propelled by the engine exhaust that drives the other impeller. The function of the other impeller is to increase compression inside the combustion chamber by forcing air into the intake manifold.

This process works well, however, the intake air charge is heated two different ways: through convection by the exhaust gases driving the turbocharger and when air is compressed.

This negative effect inside the combustion chamber results in lost power potential. Therefore, a Charge Air Cooler (CAC) is installed to cool the intake air before it enters the engine. The CAC performs the same function as a radiator, cooling air instead of liquid. Ambient air passing through the CAC will cool the engine intake air charge.

After leaving the turbocharger, intake air is compressed and heated to approximately 300º to 375º F., depending on the engine load and throttle position. Before air enters the intake manifold, the CAC cools the intake air temperature to the engine manufacturer specifications. Lowered intake air temperatures reduce exhaust emissions, improve fuel economy and increase horsepower. The CAC will continually expand and contract up to ¼" as throttle increases and decreases.

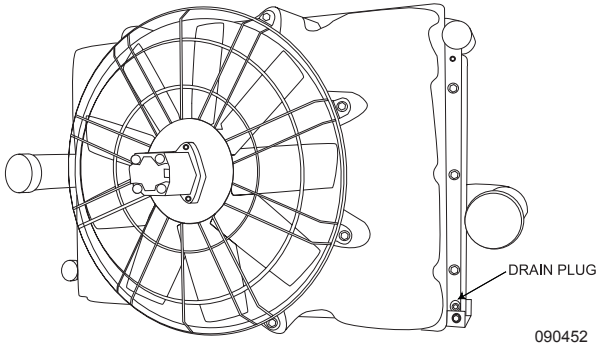

Representation of back of Radiator

Cleaning and Maintenance:

- Regular maintenance includes draining the engine coolant, flushing/cleaning the cooling system, inspecting the water pump standpipe, replacing the thermostat, gasket and seal.
- Inspect the charge air cooler every six months and remove dirt and debris that may block the fins. If the motorhome develops an oil leak, there is a possibility that the oil will coat the fins of the CAC. Dust will adhere to the oil film, clog the fins and reduce cooling efficiency. When the oil leak is repaired, the CAC must be thoroughly cleaned.
- During each oil change inspect the engine side of the radiator/CAC assembly for foreign objects that may cause restriction.
- Spraying degreaser on the charge air cooler, as well as using a steam cleaner, will not damage the CAC. However, pressure washer and steam cleaner nozzles placed too close to the CAC can bend the fins. The recommended cleaning procedure for the CAC and the radiator is to use a bucket of mild soap and water. Carefully wash with a bristle brush then rinse with minimum water pressure, standing back a distance to avoid bending the fins.
- When performing maintenance, it is also necessary to inspect other components of the cooling system. The charge air cooler and radiator also requires an inspection for cracks, broken welds, secure mounting, and general cleanliness.

REAR GRILLE

The radiator and charge air cooler assembly is located at the rear of the motorhome. A free flow rear grille covers these components. It is important the rear grille area is not obstructed in order to provide adequate air flow through the radiator and charge air cooler. Do not place a “radiator blind” or other items that could restrict air flow as this will cause the engine to overheat.

WARNING:
Do not block rear air grille area. Engine cooling will be affected and lead to overheating.

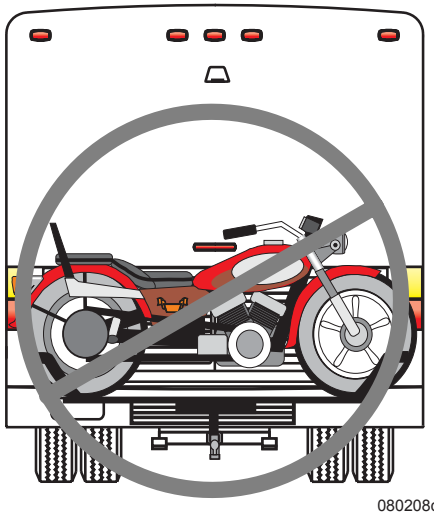

Do not *obstruct radiator grille.*

ENGINE BRAKE

The engine brake is designed to supplement the air brake system. The engine brake is not designed to bring the motorhome to a complete stop; however, it can assist in controlling the speed of the motorhome. Use of the engine braking system can extend the service life of brake shoes and drums.

The engine brake functions by releasing engine compression. The effect of the engine brake increases with engine speed. When the engine brake is activated, the transmission automatically optimizes downshifting to maximize the effectiveness of the engine brake.

When the engine brake activates, an electrical signal is sent to the engine ECM (electronic control module). The ECM controls a hydraulic circuit that opens the exhaust valves near the end of the compression stroke.

Engine braking power depends on turbocharger boost pressure, engine speed and gear selection. Use the engine brake to help slow the motorhome when descending a hill or exiting an off ramp.

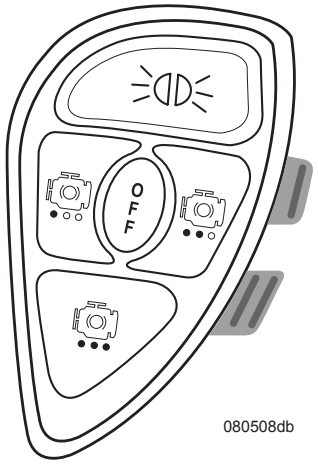

Right hand steering wheel control

To Use the Engine Brake:

- Select the amount of engine braking force using the controls on the steering wheel.

Setting “High” provides maximum engine braking affect while “Low” is the minimum setting. The engine brake will activate when the throttle is released to the idle position. Press Off to cancel the engine brake.

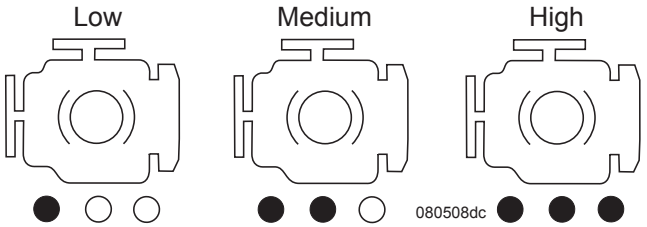

Engine brake legend

NOTE:
Cruise control must be disengaged before the engine brake will activate. Selecting an engine brake setting will not cancel cruise control.

NOTE:
The engine brake is designed to supplement the service brakes. The engine brake will not bring the motorhome to a stop. Use of the engine brake can help increase the life of the service brakes.

NOTE:
Idle the engine three to five minutes at approximately 1000 RPM to warm the engine before activating the engine brake. Do not operate the engine brake until engine oil temperature is above 30º C. (86º F.).

TRANSMISSION

The Allison transmission is compromised of four major components connected by a wiring harness: Transmission Control Module (TCM), Throttle Position Sensor, Speed Sensors and Shift Selector. The TCM processes information received from the throttle position sensor, speed sensors, pressure switches, and shift selector to provide optimum shift quality under a wide range of conditions. This is accomplished by matching transmission gear changes and road speed with engine percent of load to establish a desired shift profile within the TCM. Another feature of the transmission is the ability to "learn and adapt" (Adaptive Logic) to optimize shift quality.

Shift Selector

The keypads on the shift selector are R (Reverse), N (Neutral), D (Drive), Up and Down arrow, and Mode button. The digital display shows gear selection (Select), and gear attained (Monitor), a Trans Service icon (wrench), and transmission prognostic information. The shift selector and dash indicator lamp will display the Trans Service icon when maintenance is due.

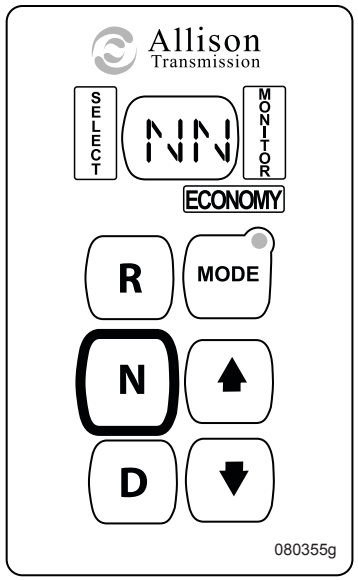

NN (Neutral) will appear in the display window when the ignition is turned On. This indicates the transmission is in neutral. If NN does not display when the ignition is turned on, there is no power to the shift selector and the transmission will not allow the engine to start. No display is an indicator of electrical problems with the engine batteries, TCM, or the shift selector.

Keypad Functions:

- Select Reverse by pressing R. RR will display.
- Select Neutral by pressing N. NN will display. The perimeter of the neutral keypad is indexed with a raised area for identification.
- Select Drive range by pressing D. The highest forward gear (6th) appears on the Select (left) side of the display. The Monitor (right) side of the display will show first gear displayed as 6 1.

As the transmission upshifts, the Monitor side of the display will show subsequent gears attained. When the auxiliary brake is applied, the display will show the highest forward gear and the "pre-select" gear, displayed as 6 2 for example. With the auxiliary brake applied, the transmission will automatically downshift until the target pre-select gear is attained. In this case, 2nd gear is the target pre-select gear. The Up and Down buttons are used to select a higher (if not in 6) or lower (if not in 1) forward gear. These buttons will not select Drive when the transmission is in neutral or reverse. Using the Up or Down buttons in Drive changes forward gear selection by one. If a button is held continuously, the gear range will continue to change up or down until the button is released or until the highest/lowest possible forward gear is selected.

- The Mode button enables a secondary shift schedule. This is commonly referred to as Economy mode. Economy mode sets the transmission upshift schedule to occur a lower engine RPM through gear changes 3-4, 4-5, 5-6 and downshift schedule 6-5, 5-4, 4-3. During highway driving with the cruise control set between 55 and 65 m.p.h., placing the transmission in economy mode should eliminate most transmission downshifts from sixth to fifth when incurring a slight incline or overpass.

CAUTION:
Do not use Economy Mode in heavy stop and go traffic or mountainous terrains. Frequent shifting while using heavy throttle occurs in Economy Mode and increases transmission fluid temperature. Exit Economy Mode until road conditions improve.

NOTE:
Cruise control power switch enabled alters the shift schedule. Turn off the cruise power switch in congested traffic and mountainous terrain.

NOTE:
The Mode button is used by the service technician to access diagnostic codes when troubleshooting. The diagnostic circuitry must be enabled to display.

CAUTION:
Engine temperature may rise when ascending long grades using full throttle. Towing a load will increase the demand on the engine. If this occurs, manually shift the transmission to the next lower gear and use less throttle. The engine will use less fuel and RPM should increase.

NOTE:
The transmission will not accept a manually selected gear change to occur if the gear selected is out of the specified operating range.

NOTE:
The transmission will not shift into gear from neutral if engine RPM is at or above 900. The display will flash "66" indicating the engine RPM is excessive. Select "N" and lower engine RPM.

Maintenance Prognostics:
The shift selector allows the operator to perform several types of maintenance checks:

- Transmission fluid level.
- Fluid life remaining before changing specified in percentages from 99% to 0%.
- Filter life remaining before changing the filters is represented as FM OK or FM LO.
- Transmission "health" monitor detects excessive internal component (clutch) wear represented TM OK or TM LO.

Enter a category by simultaneously pressing the Up and Down keypads. Press N (Neutral) to exit.

- Once for oil level display.
- Twice for fluid life remaining.
- Three times for filter life remaining.
- Four times for health monitor.
- Five times for diagnostic codes.

Trans Service Icon

If the electronics determine maintenance is due, the Trans Service icon will illuminate in the shift display and dash indicator light when the ignition key is turned on. The electronics record into memory the day and time, mileage, and message reference. The Trans Service icon will turn off shortly after selecting Drive. If necessary maintenance is repeatedly ignored, the Trans Service icon and Check Trans icon will illuminate continuously. If this occurs, the motorhome must be taken to an authorized Allison service center for repairs.

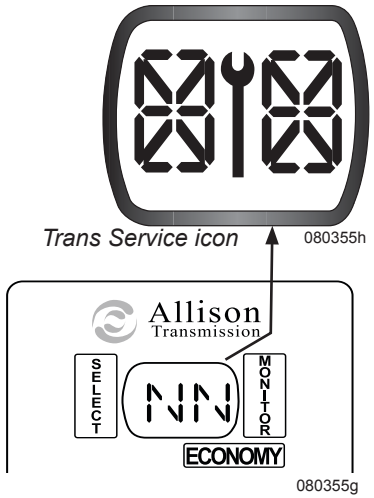

NOTE:
If the Trans Service icon remains illuminated while in Drive, the motorhome must be taken to an authorized Allison service center for repairs.

Check Trans Icon

The electronic control system of the transmission is programmed to alert the operator of a problem with the transmission system, and reacts automatically to help protect the motorhome and transmission from damage. The icon, located on the instrument panel, will illuminate briefly when the key is turned on to confirm it is functioning. The icon will go out after the engine has started.

If the Check Trans icon illuminates after engine startup or while traveling, this indicates the TCM has detected an error condition and recorded a diagnostic trouble code. The Check Trans icon may be accompanied by a flashing or steady Trans Service icon.

The motorhome should be taken to an authorized Allison service center as continued operation can result in severe transmission damage.

The shift selector can inform the operator the transmission is operating at reduced capacity, such as the shift selector display shows the actual range attained and the selector may not respond to shift requests when the TCM detects a Do Not Shift (DNS) condition. The transmission generally will downshift to 4th gear. The torque converter will not "lock-up" and engine speed is automatically reduced. Direction changes (i.e. forward to reverse) are not allowed. This allows a short time to find a safe place to park to prevent transmission damage. If the engine is shut off, then started after a Check Trans indication, the transmission remains in Neutral until the fault is corrected. Service should be performed immediately in order to minimize potential damage to the transmission.

NOTE:
Contact an authorized Allison transmission service center whenever a transmission related concern arises. For some problems, diagnostic trouble codes may be registered without the TCM activating the Check Trans indicator. An authorized Allison service center will have the equipment to check diagnostic codes and correct problems that may arise.

Diagnostic Trouble Codes

The shift selector can display transmission malfunctions as a two-digit main code and two-digit sub code.

These codes are classified Active or Inactive. Active codes are generally indicated by illumination of the Check Trans icon. Active codes affect TCM processes and transmission operation. Inactive codes generally do not illuminate the Check Trans icon. Inactive codes are retained in memory and may not affect TCM processes or transmission operation.

Should the Check Trans icon illuminate, a service technician can activate Diagnostic mode or connect a diagnostic reader (Pro-Link) to the J1939 data port and retrieve diagnostic trouble codes. A maximum of five codes, D1 to D5, can be listed at one time. The highest priority code will be listed in D1. The Mode button will enable selection of subsequent codes. The shift selector will list each code consisting of five characters. The first being a letter designate followed by a four digit number string. When new codes are added, the oldest inactive codes will be dropped.

To Display Diagnostic Codes:

1 Stop the motorhome at a safe location.
2. Apply the parking brake.
3. Simultaneously press the up and down arrows 5 times to enter diagnostic mode.

The codes will display one digit at a time or two characters at a time. Press the mode button to scroll through the codes. Record all diagnostic codes that are displayed. The codes are used by an Allison service center for evaluation and repair.

Inactive codes can be cleared by holding the Mode button for approximately 10 seconds. Some codes are self-clearing while others will require the motorhome be brought in for repair.

NOTE:
Diagnostic codes are listed in the transmission OEM manual.

Periodic Inspections:

Careful attention to fluid level and operating temperature is very important. The prognostic function in the shift selector can warn of potential problems or maintenance due. Inspect hoses for signs of leakage or abrasion. The transmission should be kept clean. Make periodic checks for loose bolts and leaking fluid. Check the condition of the electrical harnesses regularly. Check the engine cooling system occasionally for evidence of transmission fluid that would indicate a faulty oil cooler. Report abnormalities in operation or when the Check Trans icon illuminates or Trans Service icon remains illuminated to an authorized Allison service center.

Prevent Major Problems:

Minor problems can be kept from becoming major problems by contacting an authorized Allison transmission service center when one of these conditions occurs:

1. Shifting feels odd.
2. Transmission leaks fluid.
3. Unusual transmission-related sounds.
4. The Trans Service and/or Check Trans icon illuminates frequently or remains illuminated.

Transmission Fluid

The transmission is filled with TranSynd™ synthetic transmission fluid at the factory. A tag is attached to the dipstick identifying the transmission is filled with TranSynd™ synthetic transmission fluid. Use only transmission fluid meeting Allison specification TES 295.

CAUTION:
The transmission is filled with TransSynd™ synthetic transmission fluid meeting Allison specification TES 295. Do not mix with other fluid types such as Dexron/Mercon ATF (Automatic Transmission Fluid). The TCM prognostics are programmed for use with TES 295 approved fluids only.

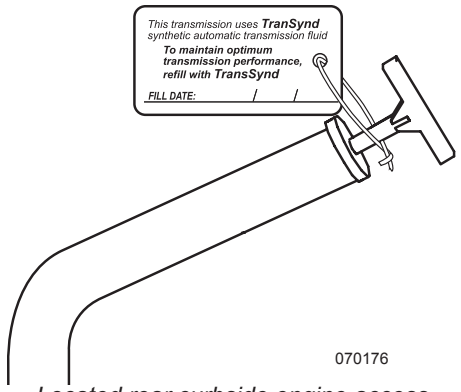

Located rear curbside engine access

Fluid Change Interval:
The transmission fluid change intervals are determined by these factors:

- When the Trans Service icon indicates.
- Date/mileage as determined by Allison in the OEM transmission owners manual.
- If the shift selector in prognostic mode displays between 99 and 2, the fluid does not need to be changed. If the shift selector displays 1, the fluid needs to be changed and the Trans Service icon will remain illuminated.

NOTE:
Date/mileage change intervals still apply as specified in the Transmission OEM Manual. Fluid must also be changed whenever there is evidence of dirt or high temperature operation as indicated by discoloration, strong odor or fluid analysis. Refer to the Allison transmission owner's manual or contact an authorized Allison service center for fluid and both filters service intervals.

Proper Fluid Levels:
The preferred method for checking the fluid level is using the shift selector. Proper fluid levels must be maintained at all times. If fluid level is too low, internal components do not receive an adequate supply of fluid. If fluid level is too high, the transmission may shift erratically or overheat. Check the transmission fluid level before each trip and after removing the motorhome from storage.

Fluid Level Check from the Shift Selector:

- Park the motorhome on a level surface.
- Place the transmission in "N" and set parking brake.
- Transmission temperature must be between 140º and 220º.
- The motorhome must be stationary and in Neutral for approximately two minutes to allow the fluid to settle in the sump.
- The engine must be idling lower than 800 RPM.
- Simultaneously press the Up and Down buttons once.

The transmission is now in Oil Level Sense mode. The display will indicate one character at a time. An "o" followed by "L" represents oil level check mode.

One of the following will be indicated:

- "o K" represents the level is okay.
- "Lo" represents a low fluid level followed by a numeric indication of the number of quarts needed fill the sump.
- "HI" represents an overfull condition followed by a numeric indication of the number of quarts the sump is overfull.
- A countdown of flashing numbers indicates the fluid is still settling. When the fluid has stabilized in the sump, the true level is indicated.
- If an "o" "L" "-" followed by a number displays, the oil level sensor could not read the level due to one of conditions listed in the "Common Oil Level Fault Codes" chart.
- Exit by pressing "N."

Manual Cold Check Procedures:
A cold check is performed to determine adequate fluid level for safe operating such as after a fluid and filter change. A cold check should be performed after transmission maintenance or service until a hot fluid level check or fluid level check from the shift selector can be performed.

Common Oil Level Fault Codes

Display	Cause of Code
o,L - O,X	Setting time too short
o,L - 5,0	Engine speed (RPM) too low
o,L - 5,9	Engine speed (RPM) too high
o,L - 6,5	Neutral must be selected
o,L - 7,0	Sump fluid temperature too low
o,L - 7,9	Sump fluid temperature too high
o,L - 8,9	Output shaft rotation
o,L - 9,5	Sensor failure

To Check the Fluid When Cold:

- Park the motorhome on a level surface. Set the parking brake.
- Chock the wheels to prevent the motorhome from moving.
- Start the engine.
- Allow the engine to run at idle (500 to 800 RPM) for one minute.
- Apply the service brakes and shift to D (Drive), then to N (Neutral), and next to R (Reverse) to fill the system. Shift the transmission to N (Neutral) and release the service brakes. Allow the engine to idle at 500 to 800 RPM. Remove the dipstick and wipe clean. Reinsert the dipstick fully into the tube, then remove to check fluid level. Repeat to verify reading, if needed.
- Safe operating level is anywhere within the Cold Check band on the dipstick. This allows safe operation of the transmission until a Hot Check or fluid level check from the shift selector can be performed.
- If the level is not within this band, add or drain fluid as necessary to put the level to the middle of the Cold Check band. Perform a fluid level check from the shift selector or a Hot Check at the first opportunity when normal operating temperatures are reached.

CAUTION:
Low or high fluid levels can cause overheating and irregular shift patterns. These conditions can damage the transmission if not corrected.

Manual Hot Check Procedures:

Fluid level rises as temperature increases. Fluid must be hot to ensure an accurate check. Be sure fluid has reached normal operating temperature. If a transmission temperature gauge is not present, check the fluid level when the coolant temperature gauge has stabilized and the motorhome has been driven for at least one hour.

- Park the motorhome on a level surface and shift to N (Neutral). Apply the parking brake and allow the engine to idle (500 to 800 RPM).
- After wiping the dipstick clean, check the fluid level. Safe operating level is anywhere within the Hot Run band on the dipstick.
- The width of the Hot Run band is approximately one quart of fluid at normal temperature range.
- If the level is not within this band, add or drain fluid as necessary to put the level within the Hot Run band. Ensure that fluid level checks are consistent. Check the level more than once. If readings are not consistent, ensure the transmission breather is clean and not clogged. If readings are still not consistent, contact the nearest authorized Allison service center.

Filter Change Interval

There are two filters in the transmission: Main Filter and Lube Filter. Both filters are replaced as a set.

The transmission filter change intervals are determined by these factors:

- Whenever the Trans Service icon indicates.
- Date/mileage as determined by Allison in the OEM Transmission Owners Manual.
- If the shift selector displays FM OK, the filters do not need to be changed. If the shift selector displays FM LO, the filters need to be changed.

Health Monitor:

The health monitor checks the amount of service life remaining of the internal clutches. If the Trans Service icon remains illuminated with the indication “LO” in the display, the transmission must be inspected by an authorized Allison service center for diagnosis and repair.

FUEL SYSTEM
Fuel Requirements

Diesel Fuel in the United States is categorized by sulfur content. There are two categories: Low Sulfur Diesel (off road) and Ultra Low Sulfur Diesel (on highway). The engine requires Ultra Low Sulfur Diesel. LSD fuel contains a maximum sulfur content of 500 parts per million (ppm); ULSD fuel contains a maximum sulfur content of 15 ppm.

WARNING:
The engine requires ultra low sulfur diesel. Do not use low sulfur diesel as this will damage the emission system and could be subject to a fine.

LSD (Low Sulfur Diesel) and ULSD (Ultra Low Sulfur Diesel): Beginning June 1, 2006, 80% of available diesel fuel in the United States will have less sulfur. Beginning October 15, 2006, additional labeling on diesel fuel dispensing pumps will reflect the reduction in sulfur to include Ultra Low Sulfur Diesel (ULSD) and Low Sulfur Diesel (LSD). ULSD fuel contains a maximum sulfur content of 15 ppm (parts per million) while LSD fuel contains a maximum sulfur content of 500 ppm. 2007 and later model year engines and emission systems are designed to use ULSD fuel.

CAUTION:
Engines designed to use ultra low sulfur diesel also require specially formulated motor oil classified by the API (American Petroleum Institute) as category CJ-4.

Seasonal Requirements: Diesel fuel classified as # 2 is used in moderate and temperate climates. A winter blend of #1 and #2 diesel fuels is available during the winter months in cooler climates (or possibly year-round in extremely cold or arctic areas). The dispensing pump may not indicate winter blend.

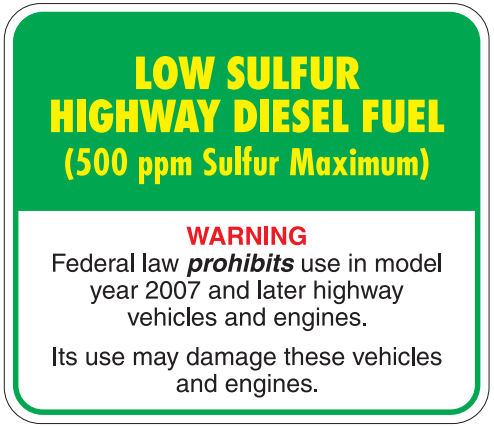

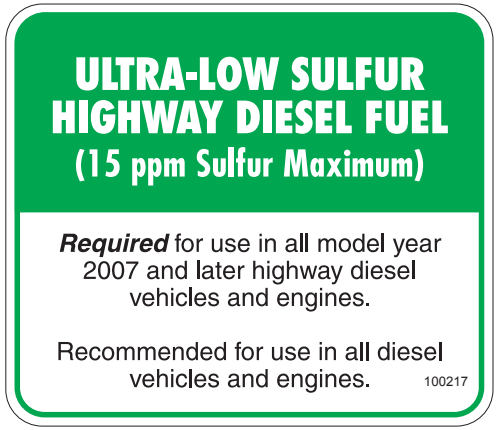

Biodiesel: Biodiesel is a synthetic fuel made from plant oil or recycled cooking oil. Biodiesel is often sold as a biodiesel/petrodiesel blend with an alphanumeric designation that indicates biodiesel content. For example: B5 is 5% biodiesel and 95% petrodiesel while B100 is 100% biodiesel. Due to variances in biodiesel, its use is restricted by the engine manufacturer. Refer to the engine OEM manual for acceptable biodiesel tolerances.

Tips: Try to obtain fuel from sources that are serviced often, such as large truck service facilities. The fuel supply is fresh and the possibility of introducing contaminants or water into the fuel system is reduced. If the engine runs out of fuel, the fuel system must to be thoroughly primed before the engine will start and run properly.

WARNING:
Do not mix gasoline, alcohol or gasohol with diesel fuel. This can damage emission systems and cause an explosion.

NOTE:
Due to the precise tolerances of diesel injection systems, it is extremely important that fuel be kept clean and free of dirt or water. Dirt or water in the system can cause severe damage to both the fuel pump and the fuel injectors. Fuel additives for lubricity are not recommended. There are numerous diesel fuel additives to help remove moisture from fuel, prevent microbe growth and to prevent gelling during cold weather. Before adding any type of fuel additive or extender, consult the OEM manual.

NOTE:
Biodiesel blends B6 up to B20 are acceptable for use if these blends meet ASTM 7467-08. Refer to the engine OEM manual for further information.



Fuel Tank

The engine pickup tube is cut at a 45° angle to allow optimum flow to the engine. The generator intake tube is set to approximately ¼ of a tank. This will prevent depleting the fuel supply to the main engine while dry camping.

The bottom of the tank is made in a "V" configuration allowing the engine pick-up tube access to almost all available fuel in the tank. Internal baffles slow fuel slosh. A check valve placed at the bottom of the baffle, at the end of the tank with the pick-up tube, prevents fuel starvation through long corners when fuel supply is low.

NOTE:
Fill the fuel tank to reduce the amount of potential condensation if the motorhome is going to be stored for any length of time. After storage, check the vent tube for blockage. It is not uncommon for insects to plug the vent tube. If pressure or vacuum exists when the fuel cap is removed, the vent tube may be blocked. The end of the vent tube is located on the curbside of the fuel tank, near the bottom.

Fuel Sender

The fuel sender, located on the top of the fuel tank, is preset at the factory and non-adjustable.

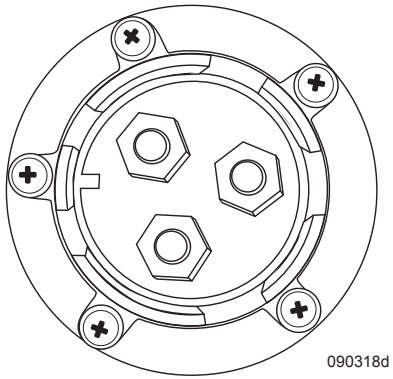

Fuel Lines & Hoses

Make a visual check for fuel leaks at all engine-mounted fuel lines, connections and at the fuel tank pick-up and return lines. Leaks in this area may best be detected by checking for accumulation of fuel under the tank. Engine performance and auxiliary equipment is dependent upon the ability of flexible hoses to transfer lubricating oil, air, coolant and fuel. Maintenance of hoses is an important step in ensuring efficient, economical and safe operation of the engine and related equipment.

INSPECTION:
Check hoses for leaks daily as part of the pre-start inspection. Check all fittings, clamps and ties. Ensure the hoses are not touching shafts, couplings or heated surfaces, including exhaust manifolds, sharp edges or other obvious hazardous areas. Vibration from the engine and road can move or fatigue clamps and ties. To ensure continued proper support, frequently inspect fasteners and tighten or replace them as necessary.

Fuel Filters

Two filters are used for the engine: a primary and secondary filter. The primary filter is located roadside behind the air conditioner condenser. The secondary filter is located on the engine.

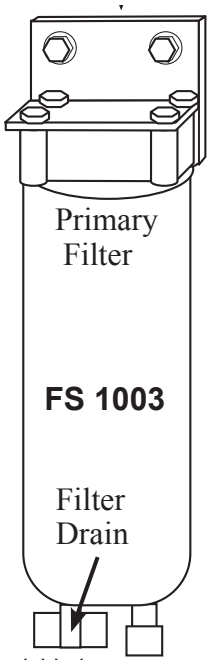

Located in roadside bay behind air conditioning condensor

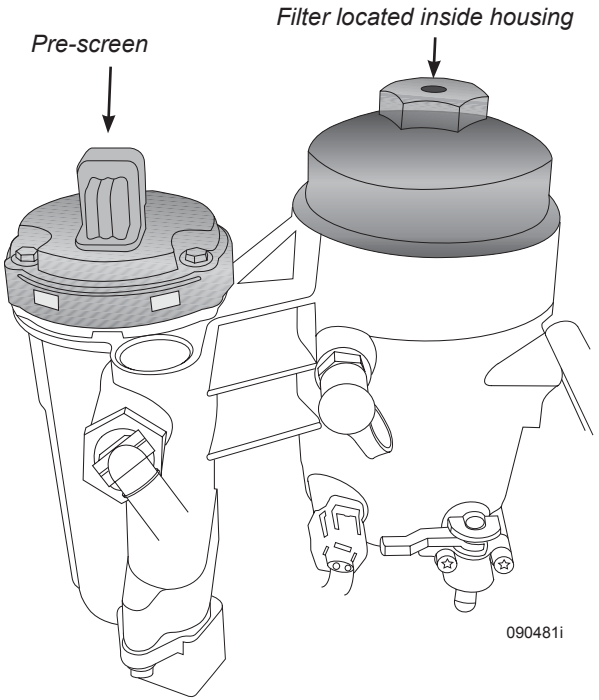

Secondary filter located curbside of engine

NOTE
It is recommended to wear gloves and old clothing when working with diesel fuel. Avoid getting fuel in the interior of the motorhome.

Filter Maintenance Intervals:

- Drain the primary fuel filter daily as recommended by the engine OEM Operation and Maintenance manual.
- Change the primary fuel filter every six months, 15,000 miles or at the first indication of power loss.
- Refer to the engine OEM Operation and Maintenance manual for service intervals of the secondary fuel filter.

Water in Fuel:

If the Warning Triangle lamp is illuminated, engine control circuits may have detected water in fuel in the secondary filter. **Do not** continue engine operation. Fuel contaminated with water can damage fuel injectors. Water is heavier than fuel and will collect at the bottom of the filter or filter housing. Drain primary filter using the valve on the bottom of the filter.

NOTE:
Always carry an extra filter as one tank full of excessively contaminated diesel fuel can plug a filter.

To Drain the Primary Filter:

- Wear safety glasses.
- Shut off the engine.
- Open the drain valve, by hand, counterclockwise approximately 1 1/2 to 2 turns until draining occurs. Drain water/fuel into a container and dispose of in accordance with local environmental regulations.
- Close the drain valve by turning clockwise when clear fuel is visible.

NOTE:
Water and sediment from the filter can contain petroleum products. Consult the local environmental agency for recommended disposal guidelines.

To Drain Secondary Filter:

- Shut off the engine.
- Wear safety glasses.
- Attach drain hose to petcock drain. Insert hose in suitable container then open petcock drain.
- Turn ignition key to the on position for 20 seconds. Do Not start engine.
- Turn ignition off for at least 10 seconds to reset timer. Turn ignition on for 20 seconds.
- Repeat cycle until only clear fuel appears.

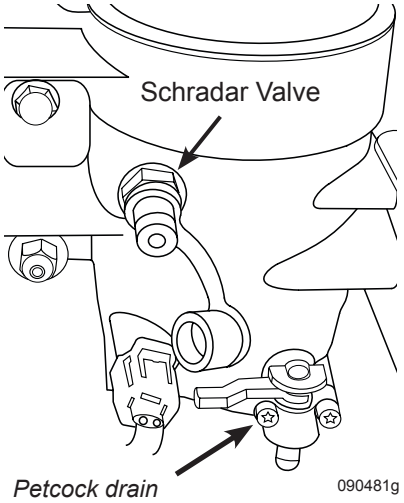

Priming the Engine:

1. Fill tank with 30 gallons of fuel, or more if parked on a slant.
2. Access the secondary filter.
3. Using caution as fuel may spray, remove dust cap and press the Schrader valve to release trapped air.
4. Turn ignition on while holding Schrader valve open to release trapped air. Electric fuel pump will run for 20 seconds. Turn ignition off for 10 seconds to reset timer.
5. When fuel appears, attempt to start the engine. If the engine fails to start, repeat step 4.

NOTE:
This procedure may have to be performed a few times.

HYDRAULIC SYSTEM

Hydraulic Reservoir

The power steering reservoir with internal filter is located in the rear engine compartment. The filter is rated at ten micron*. The reservoir is filled with AW-46 hydraulic fluid.

Filter number: 84365A (ten micron*)
**One micron is one millionth of one meter.*

NOTE:
Confirm filter number before ordering or obtaining replacement.

The primary function of the power steering reservoir is to keep the steering system free of contamination and to dissipate excessive heat that builds during operation. Check the oil level in the reservoir prior to each trip. The oil dipstick fill is located on top of the reservoir. The oil level should be kept between the full and add marks on the dipstick.

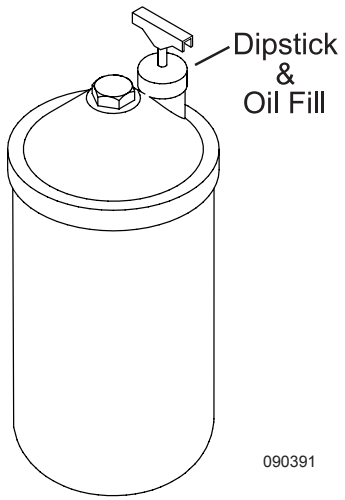

Located in the rear engine compartment

Checking the Fluid Level:

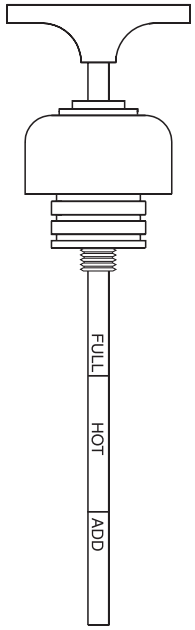

- Start the engine and allow it to reach normal operating temperature.
- While the engine is at idle, turn the steering wheel left and right to purge system.
- Shut the engine off.
- Rotate the grip handle counterclockwise to release dipstick seal.
- Check the fluid level on the Hot side of the dipstick in the area marked Hot. Do not exceed the full mark.
- If the fluid level is low, add fluid in small amounts, continuously checking the level until the Full mark is reached.
- Insert dipstick into the reservoir and rotate clockwise to expand seal. Do not over-tighten.

Power Steering Hydraulic Filter

The filter is located in the power steering hydraulic reservoir. Replace the filter every 15,000 miles, or once a year, for cellulose element.

Changing the hydraulic oil filter:

- Remove center bolt and cover plate to access the spring and filter.
- Place a container under the reservoir. Also have rags handy to clean up any oil that may spill.
- Remove the spring and washer to remove the filter assembly. Use care because oil may spill out.
- After replacing the filter assembly, reverse the process to re-assemble the reservoir.
- Ensure cover seal is installed correctly.
- If needed, fill with new AW-46 hydraulic fluid only. **Do not** reuse old oil. Start the engine and allow it to reach normal operating temperature to purge trapped air. While the engine is at idle, turn the steering wheel left and right several times. Shut engine off and confirm proper oil level.

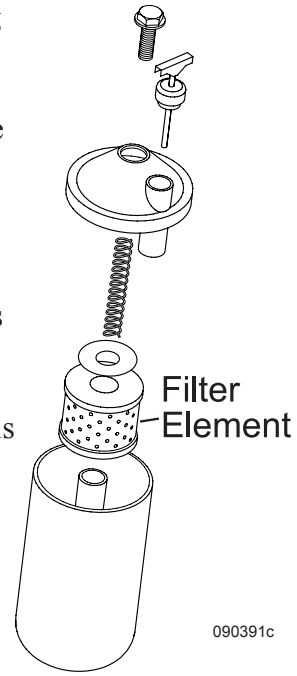

AIR FILTER

The air filter removes particulates for the engine air intake and charge air system. Air entering the engine must be as clean as possible. Contaminated air can damage major engine components. Even a small amount of contaminants can cause major damage to the engine.

INSPECTION:
Regularly inspect the air intake system for damage and loose connections. Check that ducting is not rubbing or wearing on other components and that all components are securely in place.

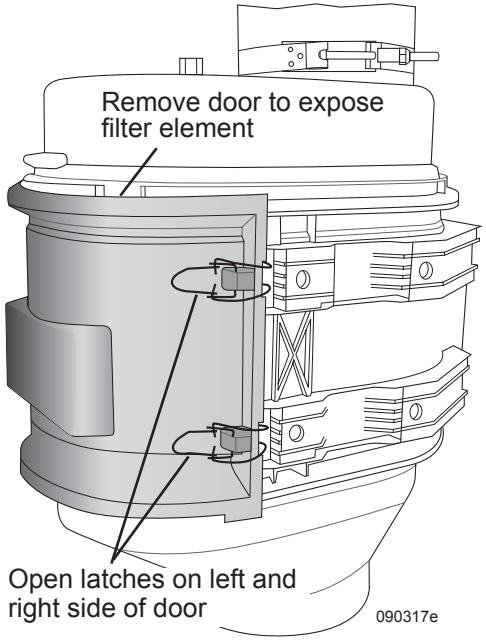

To Replace the Air Filter:
- Open latches at 4 points.
- Pull down on filter then remove from housing.
- Install new filter onto housing base. Ensure filter is properly seated on base.
- Close latches.

Primary Filter: Donaldson P610788

WARNING:
Do not operate the engine with the air cleaner removed. Severe engine damage can occur.

Air Filter Indicator

The air filter indicator measures restriction of the air intake system between the air filter and intake manifold. The indicator will show when the air filter needs changing. Visual inspection of the air filter is not an adequate method of determine air filter service life.

What Indicator Does:
- Continuously shows how much life is left in engine air filter.
- Continuously reads air flow restrictions in increments.

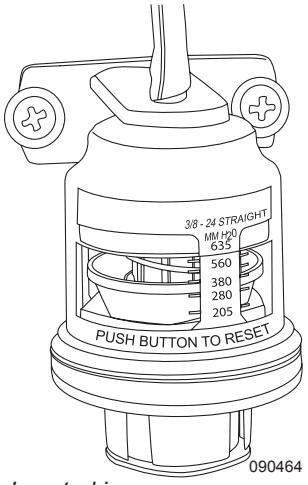

Located in rear roadside compartment

When To Monitor:
- Inspect indicator before each trip.

When To Change Air Filter:
- When the yellow indicator approaches the red (top) area. This indicates the air filter is becoming dirty and restricting air flow. Change the air filter when the red indicator stays in the window with the engine off.

How To Reset Indicator:
- Push button on top to reset.

NOTE:
If the air filter indicator should become faulty, replace entire unit.

ENGINE OIL SERVICE

Engine oil and filter service interval is based on horsepower rating and fuel mileage. The engine is also equipped with a centrifuge oil filter. The centrifuge filter is designed to remove carbon particulate matter. The engine oil filter and centrifuge filter are changed at the same time when the engine oil is changed.

WARNING:
Hot engine oil can cause burn injury. Use proper precautions when working on or around a heated engine. Wear gloves and eye protection to help prevent injury.

WARNING:
Do not allow engine fluids to remain in contact with skin and nails. Engine related fluids can cause chemical burns. Wash thoroughly to remove fluids. Properly dispose of rags and contaminated clothing in approved receptacles to prevent fire hazard.

The LCD screen located on the dash may display a Service Engine Oil message. This message serves as a reminder that oil change service is due. This message is based on statistical average miles and fuel consumed that may not reflect a true service interval due to actual fuel consumed and engine duty cycle. It is recommended to average fuel economy and use the service interval chart in the OEM engine manual to determine when actual oil change service is due.

Service Interval

Refer to the chart in the OEM engine manual to determine oil and filter service intervals.

Centrifuge Filter

The centrifuge filter is mounted to the chassis on the curbside behind the chassis batteries. The centrifuge filter contains a rotor filter element that is replaced when the main oil filter and engine oil are changed. The centrifuge filter uses oil pressure to spin the rotor filter up to 6,000 rpm causing particulate contamination to separate from the engine oil. Particulates may also accumulate on the inside surface of the housing. Therefore the housing must also be cleaned as not all particulates may be trapped in the rotor filter.

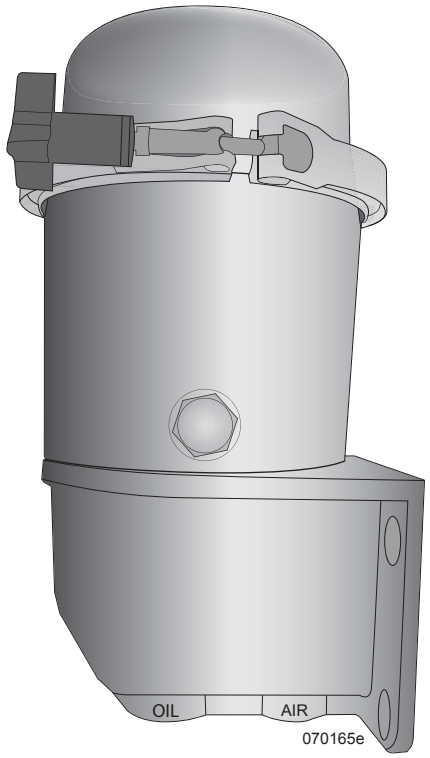

Centrifuge filter located behind chassis batteries on curbside.

Changing the Oil

Tools Needed:

- Drain pan that will hold several gallons.
- 15/16 socket or box end wrench.
- Oil filter wrench.
- Nylon stick or similar shape wooden tool.
- Rags or paper towels.
- Cleaning solvent.

1. Shut off the engine.
2. Drain sump.
3. Remove and replace main oil filter.
4. Access centrifuge filter behind chassis batteries on curbside.
5. Unscrew band clamp until free of centrifuge housing.
6. Use a coin or screwdriver to separate upper bowl from lower bowl.
7. Slowly raise upper bowl and rotor from lower housing allowing sufficient time for oil to drain from rotor into lower housing bowl.
8. Remove seal between mating surfaces of housings and replace with new O-Ring.
9. If necessary use suitable tool (such as nylon stick or wooden tool) to remove any particulate sludge and old seal from bowl housings. Wipe clean using solvent taking care to keep bowl and bearings clean of contaminants.
10. Carefully inspect upper and lower bearings to make sure they are in good condition and free of contaminants.

11. Install new rotor filter into upper housing bearing until fully seated.

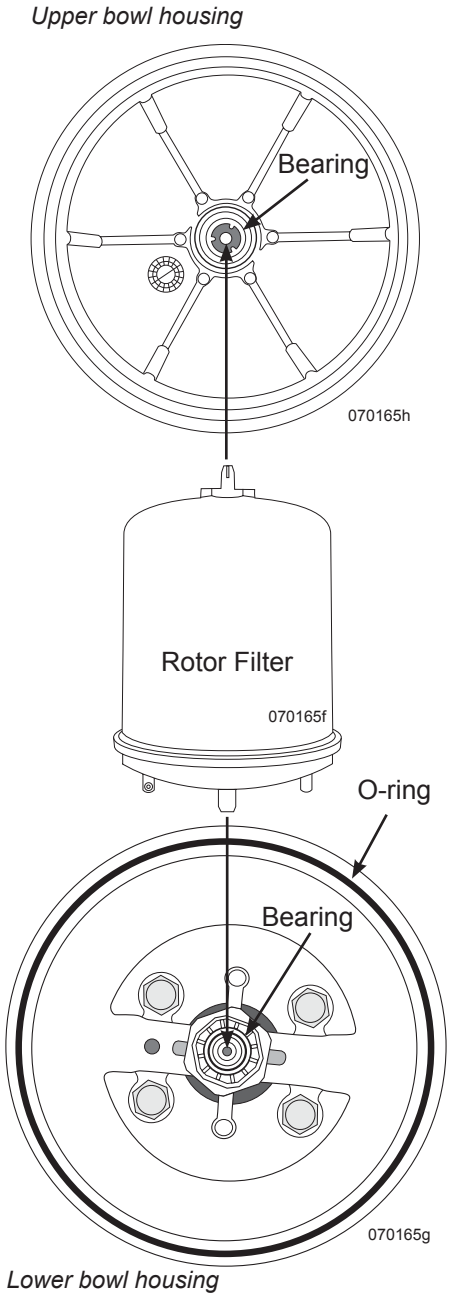

12. Lubricate new O-Ring then install into groove of lower bowl housing.
13. Carefully lower upper bowl with rotor onto lower housing ensuring lower portion of rotor inserts into lower bearing. The upper bowl should rest on lower bowl when rotor is correctly seated into bearings.
13. Install band clamp. Hand Tighten Only.
14. Fill engine with oil.
15. Start engine and check for leaks.

DIESEL PARTICULATE FILTER

The exhaust system is equipped with a Diesel Particulate Filter (DPF) to lower emissions by trapping particulate matter (soot). Naturally occurring exhaust heat oxidizes built-up particulates and clears (regenerates) the filter. This is called passive regeneration. If heat from passive regeneration is insufficient, an active regeneration cycle will automatically initiate during travel. An active regeneration cycle can also be initiated by the operator while parked. Dash indicator lamps alert the operator of the status of the DPF.

CAUTION:
The engine and related components are designed to use Ultra Low Sulfur Diesel (ULSD) only. Do not use Low Sulfur Diesel (LSD) with a DPF equipped engine. Use of low sulfur diesel fuel will damage the DPF.

Passive Regeneration:

Passive regeneration is when heat from exhaust gas oxidizes particulate matter in the DPF. Under normal freeway travel, passive regeneration is usually sufficient to oxidize particulate matter. However, particulate matter can accumulate in the DPF where an active regeneration cycle is necessary to oxidize particulate matter.

Active Regeneration:

There are two types of active regeneration; rolling and parked. Both types perform the same function but under different circumstances. A rolling active regeneration occurs automatically while traveling.

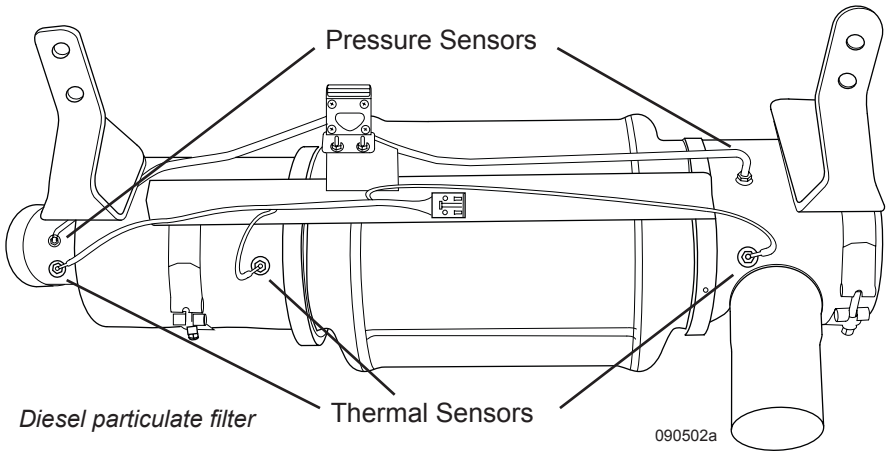

A parked active regeneration is initiated by the operator. Active regeneration injects fuel into the exhaust system to heat the DPF until particulate matter is oxidized. Active regeneration is determined by pressure sensors located on the DPF. Situations that can lead to accumulation of particulates are stop and go driving, short run periods and excess idling.

HEST Lamp:

During active regeneration, exhaust temperature can raise to over 1000 degrees F. The High Exhaust System Temperature (HEST) dash lamp will illuminate when one of three thermal exhaust sensors reach 750 F., and the motorhome is traveling slower than 5 MPH to warn of elevated exhaust temperature. The HEST lamp will remain on until exhaust temperature cools which may not be until the engine is turned off. Illumination of the HEST lamp is part of normal operation and does not indicate a fault as long as there are no other active indicator lamps.

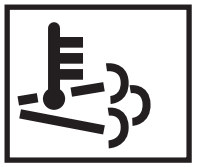

Hest lamp

WARNING:
Use extreme caution if parking the motorhome while the HEST lamp is on. The exhaust system and exhaust gas will be extremely hot to the point of fire hazard. Do not park the motorhome on or around anything combustible or flammable. Use extreme caution not to enter the path of the exhaust while the HEST lamp is illuminated. Severe burns can occur.

NOTE:
If the engine is turned off during an active regeneration cycle, the cycle will automatically begin again (if necessary) when the motorhome is traveling.

DPF Lamp:

A DPF indicator lamp on the dash illuminates when the DPF is partially clogged and restricting exhaust gasses. Driving the motorhome (preferably at freeway speed) will allow an active regeneration cycle to initiate. The DPF lamp will turn off once backpressure in the DPF is below specifications.

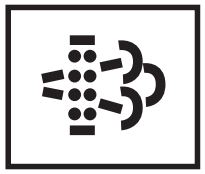

DPF lamp

Malfunction Indicator Lamp (MIL):

The Malfunction Indicator Lamp (MIL) will illuminate when an emissions fault is detected in the engine control system. The emission system will need to be serviced at the earliest opportunity.

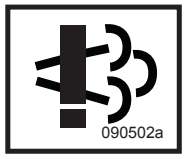

Malfunction Indicator Lamp

DPF Lamp Warning System

Indicator lamps will illuminate in stages of severity as to the condition of the DPF.

Stage One: Low Soot Load

The DPF lamp glows steady. This means that an active regeneration cycle is necessary.

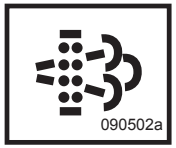

- DRIVER RESPONSE:

Drive continuously at 30 mph or greater until the DPF light turns off then continue to drive at the same speed for 10 to 15 minutes more OR start a parked regeneration.

Stage Two: Moderate Soot Load

The DPF lamp flashes. The DPF is clogged to the point that a parked regeneration needs to be performed at the earliest opportunity.



- DRIVER RESPONSE:

Pull the motorhome safely off roadway and start a Park Regeneration to prevent loss of engine power.

Stage Three: Full Soot Load/Moderate De-Rate

The DPF lamp flashes indicating an immediate necessity to regenerate the filter. The DPF is clogged to the point a parked regeneration is required as soon as possible. Engine control circuits will limit engine power.



DPF light flashing

- DRIVER RESPONSE:

Pull the motorhome safely off roadway and start a Parked Regeneration to prevent engine shutdown.

Stage Four: Over-Full Soot Load/Severe De-Rate

The DPF lamp will extinguish and the Stop Engine lamp will illuminate. Engine control circuits will limit engine power to 20% so the motorhome can be moved to a safe location.



Stop engine lamp

Shut off the engine as soon as possible to avoid severe engine and/or system component damage. **Do not drive the motorhome in this condition.** The DPF will need to be removed for repair.

- DRIVER RESPONSE:

Pull the motorhome safely off roadway. Turn on emergency flashers and **SHUT OFF** the engine. Place warning signs to alert traffic. **DO NOT USE** Parked Regeneration. Call for Service.

Parked Regeneration:

Traffic and road conditions, short run periods and excessive idling can lead to clogging of the DPF by not allowing regeneration (passive or active) to occur. If the DPF indicator lamps are at Stage 2 or 3, it will be necessary to perform a parked regeneration. A parked regeneration cycle can last up to 20 minutes. During a parked regeneration, fuel is introduced into the exhaust system. Engine speed is automatically increased to a predetermined speed.

A successful parked regeneration is indicated by the DPF lamp turning off and the engine returning to normal idle speed. The HEST lamp may remain illuminated for a period of time as exhaust system temperature will remain elevated.

NOTE:
A parked regeneration can also be performed at Stage 1.

Request Regen Switch:

The Request Regen switch performs two functions. It is used to initiate an active regeneration when parked or cancel an active regeneration cycle when parked. If the DPF is in Stage 3, it is recommended to initiate a stationary regeneration cycle as soon as possible.

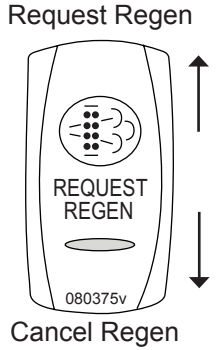

Initiating Stationary Regeneration:

The DPF lamp must be on before the engine control circuits will allow a stationary regeneration. The motorhome must be parked on a suitable surface and clear of surroundings that **Do Not** pose a fire or safety hazard.

- Engine is running with coolant temperature 170 F. or greater.
- Transmission is in neutral and park brake applied.
- Throttle in idle position. Foot brake pedal is not applied.
- Press and hold the regeneration switch for two seconds.

The “bar” light will glow steady. Engine speed will ramp up to a predetermined speed followed a short time later by illumination of the HEST lamp. The stationary regeneration cycle will last approximately 20 minutes. Regeneration is successful when engine speed returns to idle and the DPF lamp goes out. The HEST lamp will remain illuminated until exhaust temperature returns to normal.

If one or more of the pre-conditions are not met, the bar light will flash indicating active regeneration is unable to initiate until all pre-conditions are met. If a pre-condition changes state during active regeneration, such as stepping on the brake pedal, the regeneration process will stop and need to be restarted. If it becomes necessary to move the motorhome, the regeneration process can be cancelled by activating the Request Regen switch in the opposite direction.

NOTE:
The Request Regen switch will flash if one or more pre-conditions are not met. Verify all pre-conditions then activate the switch again.

WARNING:
Extreme heat warning. Exhaust gasses exiting the tailpipe can exceed 1000 degrees Fº during the regeneration cycle. Ensure the area is clear of flammable and combustible materials and people or pets.

Inhibit Regen Switch:
Turning on the Inhibit Regen switch will prevent an active regeneration from occurring while traveling or when parked. While it is preferred to allow active regeneration when necessary, situations such as nearby flammable materials or pedestrian congestion can be an unsafe environment for active regeneration.

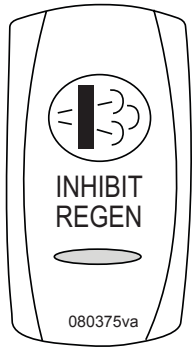

LUBRICATION MAINTENANCE

Performing regular scheduled maintenance ensures reliable operation and optimum service life of the various chassis components. Completed maintenance brings peace of mind knowing the various components have received proper service. Failure to follow maintenance guidelines, or perform scheduled maintenance, results in inefficient operation, premature component wear or component failure resulting in breakdown.

Maintenance schedules are usually performed at certain mile or time intervals. When performing high level procedures, lower level service should also be performed.

NOTE:
Maintenance schedules are based on normal operating conditions and use. Operating under unusual or adverse condition shortens service intervals.

INFORMATION:
Engine and transmission service intervals are listed in their respective OEM manuals.

Proper Lubricant Waste Disposal:
When performing service maintenance on the engine, transmission or rear axle, waste fluids and filters should be properly disposed of or recycled. Package used oils, antifreeze and other fluids in sealed containers. In many cases used oil is accepted free of charge at county disposal sites. Waste fluids are toxic to pets and other animals. Waste fluids should not be left in open containers. The sweet odor of antifreeze is attractive to pets, but highly toxic.

CAUTION:
Properly dispose of used antifreeze and waste oil. Animals like the sweet odor of antifreeze and may ingest it from open containers. Wipe up any fluid spills. Pets may lie in puddles of fluid, many of which are irritants and can cause severe chemical burns if not properly washed.

Lubricant Classification:
Lubricants are manufactured in many forms for a variety of applications. There are many different oil and grease consistencies each with a designed application. To properly select a particular type of lubricant for a specific application, the component must be evaluated.

Component stress loads, ambient temperature, working temperature and environmental exposure are just a few of the variables to consider. Select the proper lubricant for its intended application. As an example: selecting high viscosity grease to lubricate a lock cylinder results in sluggish lock cylinder operation especially in a cool environment. Conversely, using graphite to lubricate a component that is under extreme temperature and load will result in component failure. Grease ratings and their base compounds are especially important when selecting a lubricant type for an intended application. Some grease compounds are manufactured for multi-use application. These are acceptable if the grease rating is in accordance with the manufacturer's recommended lubricant type and rating.

Lubricants:

Many chassis components require lubrication. The types of lubricants used will vary with the application of the component.

A component may fail prematurely due to lack of lubrication or from using an incorrect lubricant type. The component manufacturer usually recommends a particular type of lubricant with a minimum approval rating.

Most lubricants are tested under strict guidelines set by the ASTM (American Society for Testing and Materials). The NLGI (National Lubricating Grease Institute) helps disperse information to the grease production industry.

Grease containers usually have an approval rating by the SAE (Society of Automotive Engineers), Mil Spec (Military Specification), API (American Petroleum Institute) or by other recognized and accepted organizations.

The correct lubricant type with an approved specific rating must be used whenever applying, changing or adding any lubricant. When purchasing lubricants for a specific application be sure the label affirms the type of lubricant required with the tested rating by the term “meets or exceeds” in accordance with the manufacturer specifications.

Lubricating greases are made from different base compounds giving the grease different lubricating consistencies, properties and maximum operating temperatures. Most containers list the base compound and maximum operating temperature usually listed as melting point or drip point. Lubricating components, such as brake component for example, require a high temperature grease.

Lubricating this type of component with other than specified grease type will result in inadequate lubricating qualities and component malfunction or failure.

INSPECTION:
When performing any scheduled maintenance, inspect the area around the work area. For example, changing the oil, look at the rear differential. Inspect for visual signs of fluid leaks.

Most fluids and lubricants have a distinct odor that can be used to detect early signs of trouble. Generally, odors are most detectable soon after parking. Unusual sounds are another method of detecting a problem early. There are many types of sounds that are normal, such as the cyclic purging of the air dryer. Become familiar with the different sounds. If something sounds odd, smells peculiar or looks unusual, investigate the situation.

Greasing:

Thoroughly clean all Zerk grease fittings before applying new lubricant. Keep paper towels or disposable rags handy when greasing. When lubricating items such as drive shafts and steer axle components, continued grease application is generally required until new grease appears at exit points.

Some items use sealed boots around the component to prevent moisture intrusion. When greasing these types of components, care must be given to prevent excess lubricant pressure from rupturing the seal.

WARNING:
Always chock wheels before going underneath the motorhome.

WARNING:
Do not allow anyone under the motorhome without first properly blocking frame (jackstands) from coming down in case of rapid deflation of air system.

Brake actuating components require lubrication to keep the actuating components freely operating. Avoid contaminating brake linings with lubricant. Particular care and attention to detail should be taken when lubricating brake actuating components. Wheel removal may be necessary to gain access to the grease fittings.

NOTE:
Suspension, steering, brake and drivetrain components are lubricated at factory using NLGI 2 Lithium soap based grease.

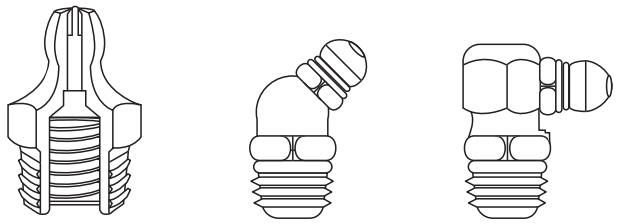

Typical Zerk Fitting 090368

To apply grease:

- Clean the grease fitting. Initially operate grease gun until new lubricant discharges from nozzle, then wipe nozzle clean to avoid introducing contaminants into the component.
- Snap nozzle onto grease fitting. Nozzle must remain in line with the grease fitting during the application process. If the nozzle is not in line, lubricant will collect around nozzle and grease fitting, failing to lubricate the component.
- Wrap the nozzle with a paper towel or rag to prevent contamination and accidental soiling of other areas.

If the component does not accept grease the Zerk fitting may be plugged or damaged. Zerk fittings are replaceable and generally available at most auto supply stores. Zerk fittings come in a variety of angles depending on the application. Every effort should be made to lubricate the component, as neglect will only result in premature component failure.

NOTE:
Some grease fittings may not be accessible until the steering wheel is turned or the motorhome is moved slightly.

NOTES

LUBRICATION CHART
36' & 40' Chassis

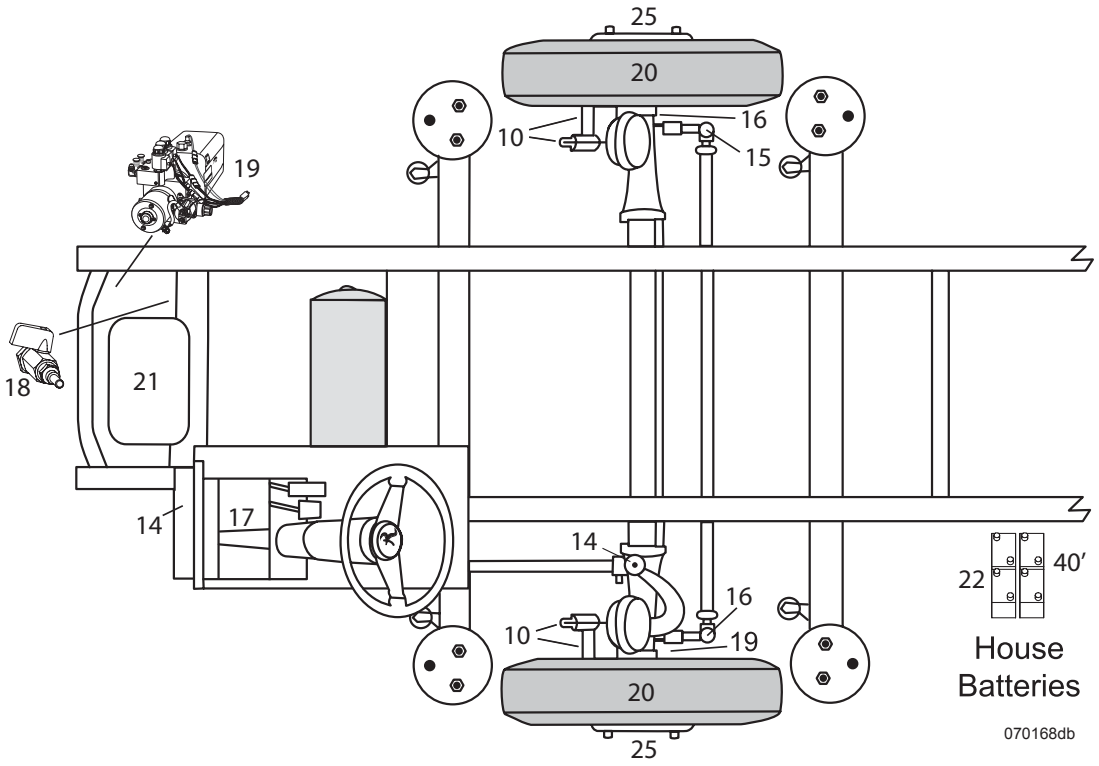

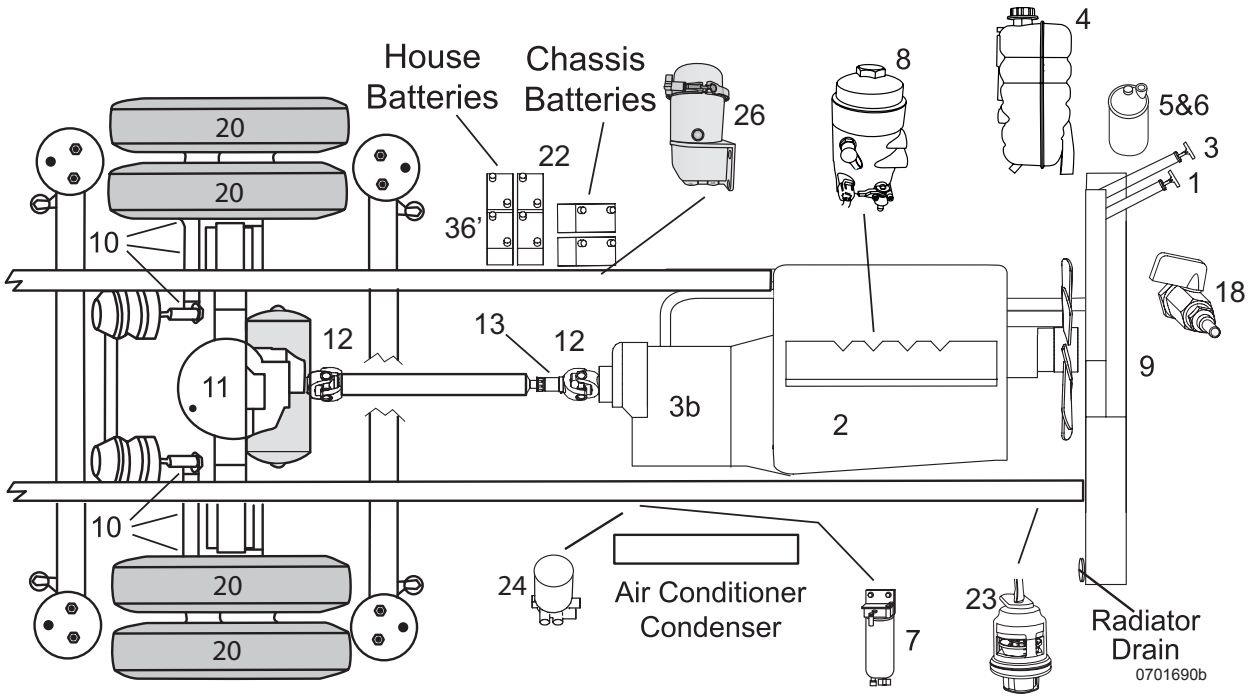

	Component:	Action:	When:	Code
1.	Engine Oil Dipstick	Keep to Full Mark	Before Each Trip + Daily Enroute	EO
2.	Engine Oil Filter	Replace Filter	At Oil Change	OEM
3.	Transmission Remote Fill	Keep to Full Mark	Refer to OEM Manual	TS
3b.	Transmission Filter	Replace	Refer to OEM Manual	OEM
4.	Engine Coolant Reservoir	Maintain Level	Before Each Trip + Daily Enroute	AF
5.	Hydraulic Fluid Reservoir	Maintain Level	Before Each Trip + Daily Enroute	HO
6.	Hydraulic Filter	Replace Filter	15,000 or Annually	HO
7.	Filter Fuel/Water Separator (Primary)	Inspect/Replace	Before Each Trip + Daily Enroute/15,000 or 6 Months	FF
8.	Filter Fuel (Secondary)	Replace	Refer to OEM Manual	OEM
9.	Radiator/Charge Air Cooler	Inspect	Weekly	-
10.	Slack Adjuster/Cam Shaft	Grease Fittings	10,000 or 3 Months	CL
11.	Rear Differential	Change Fluid	250,000 or 3 Years	MP
12.	Drive Shaft Universal Joints	Grease-2 Fittings	5,000 or 6 Months	CL
13.	Drive Shaft Slip Yoke	Grease-1 Fitting	5,000 or 6 Months	CL
14.	Drag Link	Grease-2 Fittings	5,000 or 6 Months	CL
15.	Center Link	Grease-2 Fittings	5,000 or 6 Months	CL
16.	Spindles/Kingpins	Grease-2 Fittings ea.	5,000 or 6 Months	CL
17.	Intermediate Steering Shaft	Grease-3 Fittings	30,000 or Annually	CL-4
18.	Air Tank Drains	Drains	Monthly	-
19.	Lippert Hydraulic Jack/Slideout Reservoir	Keep to Full Mark	Check Monthly Change every 36 months	ATF
20.	Tire Pressure	Check	Before Each Trip + Daily En route	-
21.	Generator	Refer to OEM Manual	Refer to OEM Manual	OEM
22.	Batteries	Inspect	Every 2 Weeks	DW
	Battery Terminals	Apply Coating	10,000 or Quarterly	P
23.	Air Filter Minder	Inspect	Before Each Trip + Daily En route	--
24.	Air Dryer Filter	Replace	2 to 3 Years	--
25.	Wheel Bearings	Re-pack	30,000 Miles or Annually	HT
26.	Centrifuge Oil Filter	Replace rotor filter	Each oil change	OEM

Lubrication Code Chart:	
*EO	Engine oil as recommended by engine manufacturer. 15w-40 w/CJ-4 rating
*OEM	Refer to engine OEM Operation & Maintenance manual.
MP	API GL-5 or MT-1 type gear lubricant SAE 80w-90 non-synthetic
*CL	Chassis lubricant. Use a high-quality non-corrosive multi-purpose lithium soap base lubricant that is water resistant and designed to withstand extremely high operating temperatures.
*ATF	Dexron 3 or Mercon 5 Automatic Transmission Fluid
*HO	Hydraulic oil. AW-46 Pink dye added
*AF	Antifreeze as recommended by the engine manufacture.
FF	Fuel Filter
HT	High Temperature Bearing Grease
*TS	TranSynd™ Allison transmission fluid
DW	Distilled Water
P	Petroleum Jelly
CL-4	U-Joints located inside the motorhome under the steering cover. Use chassis lubricant.

**Fluids initially filled at factory.*

NOTE:
Service must be performed every twelve (12) months, regardless of actual mileage, to protect seals, bearings and gaskets from drying out and failing. The motorhome must be started and driven for at least 20 miles every two weeks. It is important to remember the generator maintenance interval is based on hours of usage. Consult the OEM manual for the generator service interval.

43' Chassis

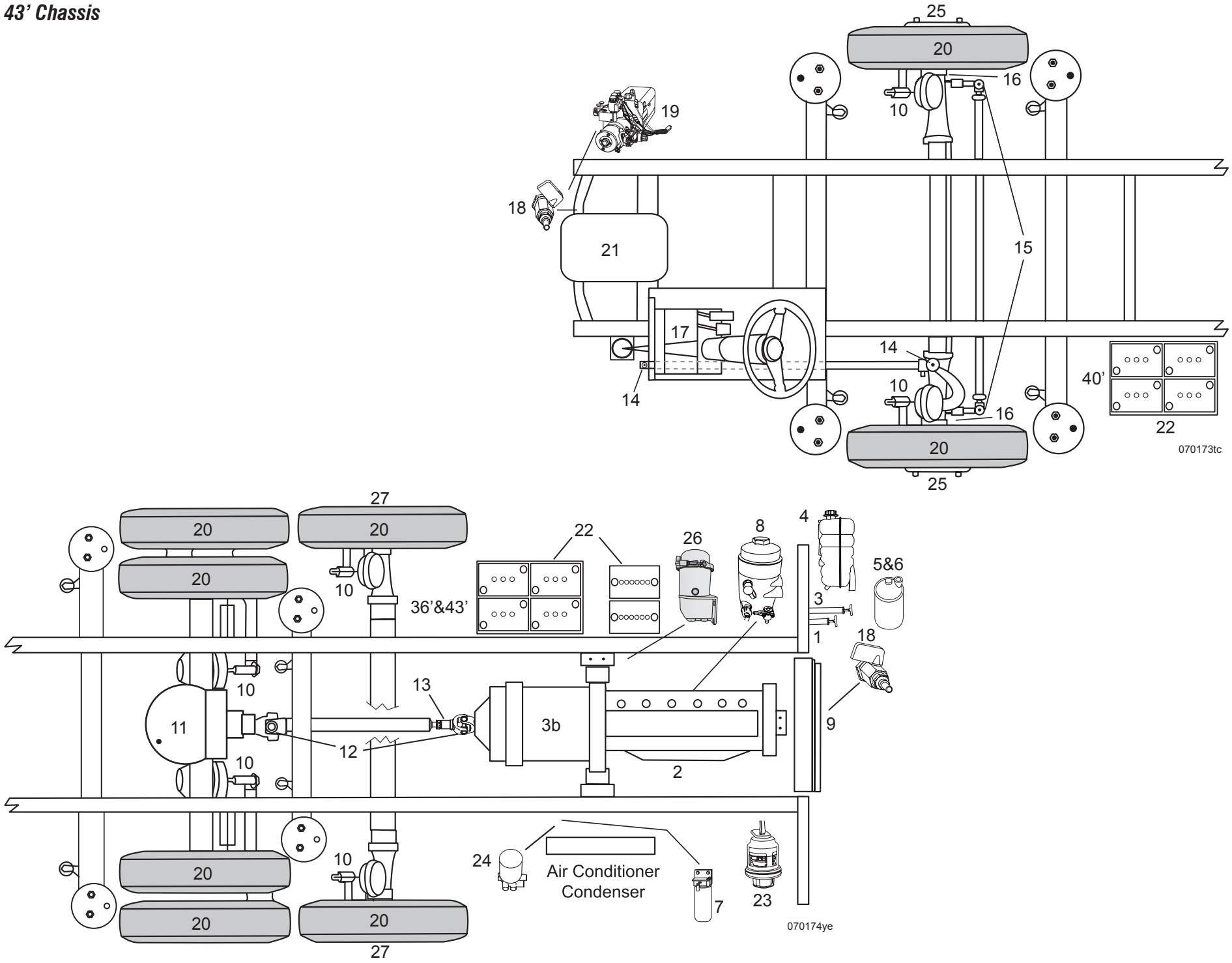
25
20
16
10
19
18
21
15
17
14
14
10
16
40'
22
20
25
070173tc
27
20
20
10
36'&43'
22
26
8
4
5&6
3
1
18
10
13
11
3b
9
12
10
2
10
20
20
10
20
20
27
24
Air Conditioner
Condenser
7
23
070174ye

	Component:	Action:	When:	Code
1.	Engine Oil Dipstick	Keep to Full Mark	Before Each Trip + Daily Enroute	EO
2.	Engine Oil Filter	Replace Filter	At Oil Change	OEM
3.	Transmission Remote Fill	Keep to Full Mark	Refer to OEM Manual	TS
3b.	Transmission Filter	Replace	Refer to OEM Manual	OEM
4.	Engine Coolant Reservoir	Maintain Level	Before Each Trip + Daily Enroute	AF
5.	Hydraulic Fluid Reservoir	Maintain Level	Before Each Trip + Daily Enroute	HO
6.	Hydraulic Filter	Replace Filter	15,000 or Annually	HO
7.	Filter Fuel/Water Separator (Primary)	Inspect/Replace	Before Each Trip + Daily Enroute/15,000 or 6 Months	FF
8.	Filter Fuel (Secondary)	Replace	Refer to OEM Manual	OEM
9.	Radiator/Charge Air Cooler	Inspect	Weekly	-
10.	Slack Adjuster/Cam Shaft	Grease Fittings	10,000 or 3 Months	CL
11.	Rear Differential	Change Fluid	250,000 or 3 Years	MP
12.	Drive Shaft Universal Joints	Grease-2 Fittings	5,000 or 6 Months	CL
13.	Drive Shaft Slip Yoke	Grease-1 Fitting	5,000 or 6 Months	CL
14.	Drag Link	Grease-2 Fittings	5,000 or 6 Months	CL
15.	Center Link	Grease-2 Fittings	5,000 or 6 Months	CL
16.	Spindles/Kingpins	Grease-2 Fittings ea.	5,000 or 6 Months	CL
17.	Intermediate Steering Shaft	Grease-3 Fittings	30,000 or Annually	CL-4
18.	Air Tank Drains	Drains	Monthly	-
19.	Lippert Hydraulic Jack/Slideout Reservoir	Keep to Full Mark	Check Monthly Change every 36 months	ATF
20.	Tire Pressure	Check	Before Each Trip + Daily En route	-
21.	Generator	Refer to OEM Manual	Refer to OEM Manual	OEM
22.	Batteries	Inspect	Every 2 Weeks	DW
	Battery Terminals	Apply Coating	10,000 or Quarterly	P
23.	Air Filter Minder	Inspect	Before Each Trip + Daily En route	--
24.	Air Dryer Filter	Replace	2 to 3 Years	--
25.	Wheel Bearings	Re-pack	30,000 Miles or Annually	HT
26.	Centrifuge Oil Filter	Replace rotor filter	Each oil change	OEM
27	Wheel Bearings Oil Hubs	Replace Oil	Annually	MP

Lubrication Code Chart:	
*EO	Engine oil as recommended by engine manufacturer. 15w-40 w/CJ-4 rating
*OEM	Refer to engine OEM Operation & Maintenance manual.
MP	API GL-5 or MT-1 type gear lubricant SAE 80w-90 non-synthetic
*CL	Chassis lubricant. Use a high-quality non-corrosive multi-purpose lithium soap base lubricant that is water resistant and designed to withstand extremely high operating temperatures.
*ATF	Dexron 3 or Mercon 5 Automatic Transmission Fluid
*HO	Hydraulic oil. AW-46 Pink dye added
*AF	Antifreeze as recommended by the engine manufacture.
FF	Fuel Filter
HT	High Temperature Bearing Grease
*TS	TranSynd™ Allison transmission fluid
DW	Distilled Water
P	Petroleum Jelly
CL-4	U-Joints located inside the motorhome under the steering cover. Use chassis lubricant.

**Fluids initially filled at factory.*

NOTE:
Service must be performed every twelve (12) months, regardless of actual mileage, to protect seals, bearings and gaskets from drying out and failing. The motorhome must be started and driven for at least 20 miles every two weeks. It is important to remember the generator maintenance interval is based on hours of usage. Consult the OEM manual for the generator service interval.

SPECIFICATIONS

Tank Capacities

Tank Capacaties (Approx. Gallons) All Models	
Water Heater	10 gallons
Grey Water	62 gallons
Black Water	40 gallons
Fresh Water	100 gallons
Diesel Fuel	100 gallons
Propane*	39 gallons

**Actual filled Propane Tank Capacity is 80% of listing due to safety shutoff required on tank.*

NOTE:
All tank capacities are estimated based upon calculations provided by the tank manufacturer and represent approximate capacities. The actual "usable capacity" may be greater or less than the estimated capacities based upon fabrication and installation of the tanks.

NOTE:
These charts reflect product specifications available at the time of printing. Therefore any floor plans introduced thereafter may not be reflected in the chart. All other information contained throughout the manual will still apply.

NOTE:
Verify the numbers at time of removal. The manufacturer will not be responsible for incorrect filter or belt usage. Please refer to the engine OEM Operation and Maintenance manual for specific maintenance information.

Engine Specifications

ENGINE SPECIFICATIONS	MaxxForce 10 EPA 2010
Cubic Inch Displacement	9.3 L/570 CI
Engine HP	405 HP@ 2000 RPM
Engine Torque	1250 lbs./ft. @ 1300 RPM
Firing Order	153624
Rear Axle Ratio	4:30:1
Alternator Amp Size	160 Amp
Idle Speed	700 RPM
Governed Speed	2200 RPM

Chassis Fluid Capacities

CHASSIS LIQUID CAPACITIES	MaxxForce 10
Engine Oil	30 Qts (approx) w/ filter
Transmission Oil (with service)	17 Qts.w/filter
Radiator Coolant (initial amount)	13 Gal.
A/C Refrigerant (initial amount)	4 lbs. 134 A
Hydraulic Oil (power steering)	3.5 Qts.
Rear End	15 Qts. Approx.

Serpentine Belt Routing

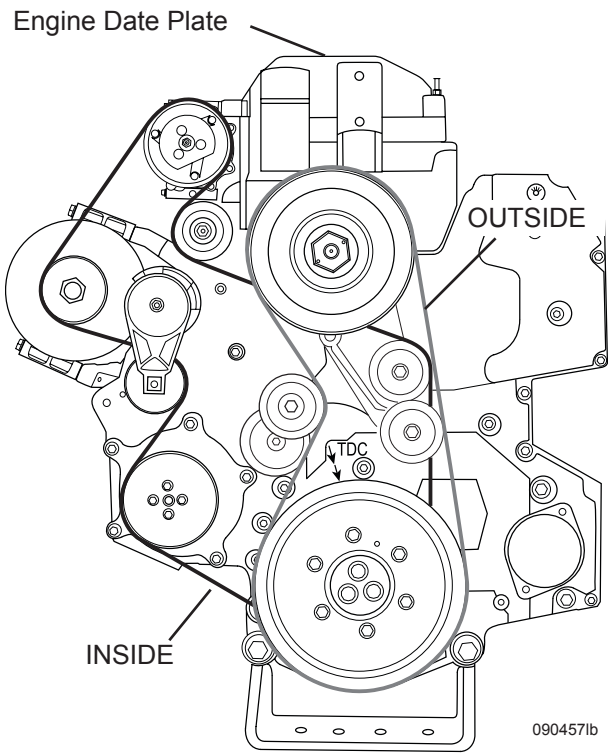

MaxxForce 10

Belts & Filters

BELTS & FILTERS	MANUFACTURER	NUMBER
Air Filter	Donaldson	Safety 601560 Primary P610788
Fan Drive (Outer) Belt	Dayco	5080765
Alternator Belt (Inside) Belt	International	1847716C1
Fuel Filter Primary	Fleetguard	FS1003
Fuel Filter Kit Secondary	International	1878042C91
Oil (Lube) Filter	International	1884508C1
Centrifuge Filter	International	2606467C91
Transmission Filter	Allison	29545779
Air Dryer Filter	Meritor Wabco	R950011

Generator Specifications

8 Kw

SERVICE INFORMATION

Refer to operator's manual for maintenance specifications and adjustments.

Air Cleaner	_	140-2897
Oil Filter	_	122-0833
Fuel Filter	_	149-2513
Oil Capacity	_ 3	Qts w/oil filter
API Designation	_ CE	

Temp	SAE Viscosity
5° - 120°F	15W-40
(-13°F) - 68°F	10W-30
(-40°F) - 68°F	5W-30

If service/parts are needed the Onan distributor can be located in the yellow pages under Generators-Electric. In the USA or Canada call 1-800-888-Onan

DC Fuss & Radiator Cap Under Cover.

020159o

10 Kw

SERVICE INFORMATION

Refer to operator's manual for maintenance specifications and adjustments.

Air Cleaner	_	140-3071
Oil Filter	_	122-0897
Fuel Filter	_	149-2513
Oil Capacity	_ 6	Qts w/oil filter
API Designation	_ CE	

Temp	SAE Viscosity
5° - 120°F	15W-40
(-13°F) - 68°F	10W-30
(-40°F) - 68°F	5W-30

If service/parts are needed the Onan distributor can be located in the yellow pages under Generators-Electric. In the USA or Canada call 1-800-888-Onan

DC Fuse & Radiator Cap Under Cover.

060144p

Tire Size

GOODYEAR G670 RV
295/80r 22.5 Load Range H

Battery Specifications

Application	AH (20 HR)	CCA†	RC (25A @ 80° F) Minutes
12 Volt Chassis* Group 31p - LHD (2 each)*		750	180
6 Volt Domestic** UL16HC 2 Std (4 each w/residential refer option)	420		75 Amp @ 80° F = 250 Min.

**Batteries connected in parallel. **Batteries connected in a Series/Parallel configuration.*
†CCA Ratings are 0° F. These are the minimum requirements.

Approximate Minutes of Ampere Load					
UL16HC**	10 AMPS	25 AMPS	50 AMPS	75 AMPS	100 AMPS
	4980	1780	688	472	328

***Batteries connected in a Series/Parallel configuration.*

Battery State of Charge vs Voltage/Specific Gravity			
Voltage	Specific Gravity	State of Charge	Depth of Charge
12.65	1.265	100%	0%
12.45	1.225	75%	25%
12.25	1.190	50%	50%
12.05	1.145	25%	75%
11.90	1.100	0%	100%

Voltage Reading: Battery fully charged at rest for one hour.

Engine Cold Cranking Amps Requirements			
MaxxForce 10	1500	CCA	12 VOLTS

CCA Ratings are 0° F. These are the minimum requirements.

Chassis Weight Ratings

	36’	40’	43’
GVWR	33,000 lbs	33,000 lbs	43,000 lbs
GCWR	43,000 lbs	43,000 lbs	53,000 lbs
GAWR (Front)	13,000 lbs	13,000 lbs	13,000 lbs
GAWR (Rear)	20,000 lbs	20,000 lbs	20,000 lbs
GAWR (Tag)	N/A	N/A	10,000 lbs

The hitch receiver is rated at 10,000 lbs towing. Do not exceed the GAWR, GVWR, GCWR or the rating of the hitch receiver.

MAINTENANCE RECORDS

After scheduled services are performed, record the date, odometer reading and who performed the service. Any additional information can be added on the following pages. In addition, retain all maintenance receipts.

LUBRICATION SERVICE RECORD

KEY TO SERVICES

A – Lubrication & Inspection
A1 -- Motor Oil & Filter Change
A2 -- Transmission Oil Change
A3 -- Drive Axle Oil Change
A4 -- Wheel Bearing Service
B – Prescribed Service
C – Prescribed Service
D – Prescribed Service
E – Prescribed Service

MILEAGE	SERVICES									JOB PERFORMED	
	A	A1	A2	A3	A4	B	C	D	E	DATE	BY
1											
2											
3											
4											
5											
6											
7											
8											
9											
10											
11											
12											
13											
14											
15											
16											
17											
18											
19											
20											
21											
22											
23											
24											
25											
26											
27											
28											
29											
30											

BATTERY RECORD						
MAKE	TYPE	DATE INSTALLED	REPAIRS	DATE REPLACED	SERVICE	
					MONTHS	MILES

TIRE RECORD							
MAKE	TYPE	PLY	DATE INSTALLED	REPAIRS	DATE REPLACED	SERVICE	
						MONTHS	MILES

NOTES

A

ABS/ATC System (Anti-lock Brakes)..... 220
Air Conditioner & Heater Controls 205
Maintenance 206
Operating Tips & Hints 206
System Components 206
Troubleshooting 207
Alternator 197
Alternator Testing Procedure 197
Air Conditioning - Roof 91
Thermostat 91
LCD Display 91
Remote Temperature Sensor 92
Air Conditioning - Roof 92
Fan Operation Only 92
Air Conditioner Operation 92
Heat Pump Operation 92
Air Conditioner Maintenance 93
Air Dryer 216
Desiccant Cartridge 217
Desiccant-Type Air Dryer 217
Air Dryer Cycle 218
Air Filter 254
Air Filter Indicator 255
Air Spring Inspections 218
Air Supply System 212
Air Governor 213
Air Storage Tanks 213
Air Fittings 214
Air Coupler 214
Air System Charging (External) 215
Air System Test 215
Appliances - Introduction 80
Aqua-Hot - Model 400D 94
Aqua Hot Operation – Diesel 94
Aqua Hot Operation – Electric 94
Troubleshooting 95
Bay Thermostat 95
Maintenance 95
Winterize the Aqua-Hot 96
Annual Tune Up 97
Internal Diagram 98
Awnings 113
Slide-out Cover 113
Rain Water 114
Front Door Awning 114
Window Awning 114
Patio Awning 115
Awning Care & Cleaning 115
Storm Precautions 116

B

Backing Up A Motorhome 20
Batteries - House 179
Battery Maintenance 179
Testing the Battery 182
Charge Time & Consumption Rate 183
Battery - Chassis 190
Battery Disconnect 190
Chassis 190
Battery Disconnect - House 165
Battery Maintainer 196
Relays 196
Bedroom Ceiling Fan (Optional) 117
Brake Systems 219
Air Brakes 219
Park & Emergency Brake System 219
Automatic Slack Adjuster 219
Brake Systems - Backup 220
Breaking Camp 23

C

Carbon Monoxide Detector 51
Operation 52
Alarm 52
Testing 52
Cleaning & Maintenance 53
Ceiling 67
Central Vacuum (Optional) 101
Operation 101
Maintenance 101
Chassis - Introduction 212
Chassis Distribution Panels 190
Front Electrical Panel 191
Rear Electrical Panels 194
Chassis Electrical - Introduction 190
Cold Weather Conditions 144
Water Center Heater 144
Fresh Tank Heat Pad (40’ only) 145
Cold Weather Storage 145
Convection microwave 87
Care & Cleaning 88
Cooktop - Electric (Optional) 90
Cleaning and Care 91
Cooktop - Propane 89
Safety 90
Cooktop Covers 90
Burner Grate 90
Care & Cleaning 90
Coolant System 241
Radiator/Charge Air Cooler 244
Countertops 69
Solid Surface 69
Repairing Cuts and Scratches 69
Laminate 70

D

Dash 200
Instrument Panel 200
Indicator Lights 201
LCD Controller 202
LCD Display 202
Switches 202
Dash Radio 121
Steering Wheel Controls 122
Radio Switch 123
Satellite Radio (Optional) 123
Diagnostic Plug Location 208
Diesel Particulate Filter 257
DPF Lamp Warning System 258
Distribution Panel - House 12 Volt DC ... 177
Door - Sliding 117
Drain Traps & Auto Vents 144
Drive Axle & Drive Shaft 227
Driving & Safety 10
Inspections 10
Familiarize Yourself 10
Mirror Adjust 10
Safety Seat Belts 11
Driving Tips 12
Adjust to Driving Conditions 13
Dry Camping 22

E

Emergency Roadside Procedures 25
In Case of Flat Tire 25
Dead Chassis Battery 25
Engine - General Information 238
Engine "No Start" Flow Chart 209
Engine Brake 245
Engine Oil 240
Engine Oil Service 256
Service Interval 256
Centrifuge Filter 256
Changing the Oil 256
Engine Shutdown 241
Extended Engine Shutdown 241
Entry Door 107
Keyless Entry 107
Entry Step 106
Operation 106
Maintenance 106
Step Cover 107
Stepwell Storage 107
Equipment - Introduction 106
Escape (Egress) Window 54
Exterior Care 56
Corrosion 56
Winter Drive Protection 56
Washing 57
Drying 57
Waxing 57
Paint Codes 58
Tire Care 58
Bright Metal 58
Wheels - Polished Aluminum 59
Exterior Maintenance 59
Fiberglass 59
Roof Care & Seal Inspections 60
Sealant Types 60

F

Fabrics 62
General Care & Cleaning 62
Vinyl 62
Optima Leather & "O" Vinyl 63
Ultra-Leather 64
Fans 116
Automatic 116
Faucet Screens 138
Fire Extinguisher 53
Maintenance 53
Fireplace Electric (Optional) 103
Operation 103
Floors 64
Carpet Cleaning 64
Laminate Floor 65
Tile Floor 66
Fresh Water 135
Fresh Water Fill 135
Front Axle 223
Alignment Specifications 223
Lubrication Maintenance Safety 224
Steering Components 224
Intermediate Steering Shaft 225
Drag Link 225
Center Link 225
Steering Spindles 226
Control Arm Bushings 226
Drum Brake Lubrication 226
Steering Gear 226
Fuel System 251
Fuel Requirements 251
Fuel Tank 252
Fuel Sender 252
Fuel Lines & Hoses 252
Fuel Filters 252
Fuses & Circuit Breakers - 12 Volt DC ... 178

G

Generator - 120 Volt AC 168
Pre-Start Checks..... 169
Starting the Generator..... 169
Stopping the Generator 170
Powering the Equipment..... 170
Generator Fuel 170
Resetting the Circuit Breaker..... 170
Generator Exercise..... 171
Glossary of Terms 5
GPS Navigation (Optional) 123
Grab Handle..... 107

H,I,J,K

Height Control Valves..... 218
Hitch 16
Using the Rear Receiver 16
Tow Plug Connection..... 19
House Electrical - Introduction 164
Hydraulic System..... 254
Hydraulic Reservoir..... 254
Power Steering Hydraulic Filter 254
Interior Care..... 61
Cockpit..... 61
Inverter 171
Providing AC Power with Inverter 171
Battery Charging with Inverter 172
Factory Default Settings 173
Battery Temperature Sensor..... 173
Auto Generator Start (Optional) 173
AGS Menu: 173
AGS Programming..... 174
ATS Programming 174
Disabling AGS/ATS..... 174
Power Assist..... 174

L,M,N,O

Ladder - Rear (Optional) 121
Leveling - Air 231
Automatic Air Leveling 232
Manual Air Leveling..... 232
Travel Mode..... 233
Service..... 233
Leveling - Hydraulic (Optional) 233
Prior to Leveling 234
Automatic Leveling 234
Manual Leveling..... 235
Jack Retract Procedure..... 235
Jacks Fail to Extend or Retract 236
Control Pad Lockup 236
Maintenance..... 236
Checking/Adding Hydraulic Fluid..... 237
Manual Override 237
Lights..... 185
Interior Halogen..... 185
Incandescent Light..... 186
Map Light 186
Limited Warranty Transfer 8
Load Center - 120/240 Volt AC 175
Power Control System 175
Circuit Breakers 176
GFCI Breakers & Outlets..... 176
Lubrication Chart..... 264
36’ & 40’ Chassis..... 264
43’ Chassis 266
Lubrication Maintenance..... 260
Maintenance Records 270
Mold & Mildew 71

P,Q

Pest Control 72
Propane Consumption 160
Propane Detector..... 153
Testing..... 153
Alarm 154
Maintenance..... 154
Propane Distribution Lines..... 160
Propane Emergency Procedures..... 154
Propane Fundamentals..... 157
Propane Hose Inspection 159
Propane Regulator 158
Propane Safety Tips 161
Propane Systems 152
Propane Tank 155
Measurement..... 155
Tank Capacity 155
Tank Filling..... 155
Tank Operation..... 156
Accessory Hookup..... 156

R

Rear Grille 245
Rear Vision System 19
Refrigerator (Optional) 80
Operation Specifics 80
Control Panel - Four Door 81
Icemaker..... 82
Refrigerator Alarm 82
Cooling Unit Fans 83
Doors..... 83
Storage Procedures..... 83
Interior Light..... 83
Service..... 84
Exterior Refrigerator Access Panel..... 84
Air in Propane Supply Lines..... 84

Refrigerator - Residential..... 84
Control Panel 85
Icemaker..... 86
Water Filter 86
Reporting Safety Defects 4

S

Safety Terms 4
Satellite Systems - Prewire 128
Living Room Prewire..... 128
Bedroom Prewire 128
KVH R5 (Optional)..... 129
Winegard Trav'ler (Optional) 130
Satellite Wiring 130
Seat Controls 117
Swivel Seats..... 118
Set-Up Procedures..... 21
Shock Absorber 231
Shore Power Hook-up..... 165
Power Cord Reel..... 166
Shower..... 66
Slideout Operation 108
Extending & Retracting Slide Rooms..... 108
Lock Bar..... 109
Troubleshooting 109
Manual Override – Living Room..... 110
Manual Override - Bedroom..... 113
Smoke Detector 50
Operation..... 50
Testing..... 50
Maintenance..... 50
Troubleshooting 50
Sofa 118
Jack Knife Sofa..... 118
Hide-A-Bed (Optional) 119
Hide-A-Bed Air Mattress (Optional) 119
Select Comfort Air Mattress (Optional)... 120
Solar Panel (Optional) 184
Charge Controller..... 184
Monitor 185
Solar Panel Care 185
Solar Screen & Blackout Shade.....117
Cockpit..... 117
Specifications 268
Tank Capacities..... 268
Engine Specifications..... 268
Chassis Fluid Capacities 268
Belts & Filters..... 268
Serpentine Belt Routing..... 268
Generator Specifications 269
Tire Size 269
Battery Specifications 269
Chassis Weight Ratings..... 269
Stainless Steel Surfaces..... 70
Starting Procedure..... 239
Normal Starting..... 239
Cold Weather..... 239
Steering Wheel & Column 198
Cruise Control..... 198
Tilt & Telescope..... 199
Storage 75
Short Term..... 75
Long Term..... 75
Winter Storage Checklist 77
Removal from Storage 77
Storage - Under Bed..... 121
Storage Bay Slide-out Tray (Optional).... 121
Systems Control Center..... 131

T,U,V

Tag Axle..... 229
Tag Axle Operation 229
Adjusting Tag Axle Load 230
Tag Axle Lubrication 230
Oil Change Intervals 230
Tires..... 29
Importance of Air Pressure 29
Load Inflation Table..... 29
Inspecting & Pressure 30
Air Pressure Checklist..... 31
Tire Support When Leveling..... 32
Tire Vibration..... 32
Tire Rotation 32
Tire Replacement 32
Storage of Tires - Long Term..... 33
Toilet..... 141
Pedal Flush..... 141
Electric Flush 142
Cleaning 143
Maintenance..... 144
Troubleshooting 144
Winterization..... 144
Towing Procedures..... 27
Disabling Parking Brake 28
Transfer Switch 167
Transmission..... 246
Shift Selector..... 246
Trans Service Icon 247
Check Trans Icon 247
Diagnostic Trouble Codes..... 248
Transmission Fluid..... 249
Filter Change Interval 250
Trip Preparation 15

TV Entertainment Components 123
Television (Front) Lockout Feature 123
TV Antenna 123
Cable TV, Sat & Phone Connection 124
Front TV Operation 124
Exterior Entertainment Center (Opt) 126
Bedroom TV Operation 127
Typical Electrical Layout 187

W,X,Y,Z

Wall Coverings 67
Warranty Information File 4
Washer-Dryer Prepared 98
Washer/Dryer Stacked (Optional) 99
Washer 99
Test Cycle 99
Operating Instructions 99
Cleaning the Washer 100
Winterizing the Washer 100
Dryer 100
Operation 101
Dryer Maintenance 101
Waste Pump 140
Waste Water Systems 139
Proper Waste Disposal 139
Do Not Put in Waste Holding Tanks 139
What to Put in Holding Tanks 139
Water Filter 137
Water Pump 136
Water Pump Troubleshooting 136
Water Service Center 148
Water System Diagram 149
Water Systems 138
Troubleshooting 138
Disinfecting Fresh Water 138
Water Systems - Introduction 134
Water tank 135
Fresh Gravity Fill 135
City Water Hook-Up 135
Water Tanks 134
Measurements & Calibration 134
Weighing The Motorhome 35
Tire Pressure 37
Scales 38
Four-Point Weighing 38
Weight Record Sheet 41
Weighing The Motorhome-Tag Axle 42
Weight Terms 43
Tag Axle Regulator 44
Tag Axle Adjustment 45
Tire Pressure 46
Scales 46
Six-Point Weighing 47
Weight Record Sheet Tag Axle 49
Wheel Mounting 34
Windows 70
Condensation 70
Window Treatments 71
Mini-Blinds 71
Day/Night Shades 71
Winterization 145
Using Air Pressure 146
Using Nontoxic Antifreeze 146
De-Winterization 147
Wood Care 67