WARRANTY - LIMITED: SIGNATURE 2005 1
WARRANTY - LIMITED: 2005 ROADMASTER CHASSIS 6
WARRANTY INFORMATION FILE 10

WARRANTY - LIMITED: SIGNATURE 2005

MONACO MOTORHOME LIMITED WARRANTY

What the Period of Coverage Is:

If you use your Monaco® motorhome only for recreational travel and family camping purposes, the Limited Warranty provided by Monaco ("Warrantor") covers your new motorhome when sold by an authorized dealer, for twelve (12) months from the original retail purchase date or the first 24,000 miles of use, whichever occurs first. However, the Limited Warranty provided by Warrantor covers the steel or aluminum frame structure of the sidewalls (excluding slide outs), roof, and rear and front walls for sixty (60) months from the original retail purchase date or the first 50,000 miles of use, whichever occurs first.

If you use your motorhome for any rental, commercial or business purposes whatsoever, the Limited Warranty provided by Warrantor covers your new motorhome when sold by an authorized dealer for ninety (90) days from the original retail purchase date or the first 24,000 miles of use, whichever occurs first. In addition, the Limited Warranty provided by Warrantor covers the steel or aluminum frame structure of the sidewalls (excluding slide outs), roof, and rear and front walls for twelve (12) months from the original retail purchase date or the first 24,000 miles of use, whichever occurs first. A conclusive presumption that your motorhome has been used for commercial and/or business purposes arises if you have filed a federal or state tax form claiming any business tax benefit related to your ownership of the motorhome.

The above Limited Warranty coverage applies to all owners, including subsequent owners, of the motorhome. However, a subsequent owner must submit a warranty transfer form by filing the form through an authorized Monaco dealer. A subsequent owner's warranty coverage period is the remaining balance of the warranty coverage period the prior owner was entitled to under this Limited Warranty. Warranty transfer forms can be obtained by contacting the Customer Relations Department. There is no charge for the transfer.

Limitations of Implied Warranties

ANY IMPLIED WARRANTIES ARISING BY WAY OF STATE LAW, INCLUDING ANY IMPLIED WARRANTY OF MERCHANTABILITY AND ANY IMPLIED WARRANTY OF FITNESS FOR A PARTICULAR PURPOSE, ARE LIMITED IN DURATION TO THE TERM OF THIS LIMITED WARRANTY AND ARE LIMITED IN SCOPE OF COVERAGE TO THOSE PORTIONS OF THE MOTORHOME COVERED BY THIS LIMITED WARRANTY. Warrantor disclaims all implied and express warranties, including the implied warranty of merchantability and the implied warranty of fitness for a particular purpose, on components and appliances excluded from coverage as set forth below. There is no warranty of any nature made by Warrantor beyond that contained in this Limited Warranty. No person has authority to enlarge, amend or modify this Limited Warranty. The dealer is not the Warrantor's agent but is an independent entity. Warrantor is not responsible for any undertaking, representation or warranty made by any dealer or other person beyond those expressly set forth in this Limited Warranty. Some states do not allow limitations on how long an implied warranty lasts, so the above limitation may not apply to you.

What the Warranty Covers

Warrantor's Limited Warranty covers defects in the manufacture of your motorhome and defects in materials used to manufacture your motorhome. Also see the section "What the Warranty Does Not Cover" set out below.

What We Will Do To Correct Problems

Warrantor will repair and/or replace, at its option, any covered defect if: (**1**) you notify Warrantor or one of its authorized servicing dealers of the defect within the warranty coverage period and within five (5) days of discovering the defect; and (**2**) you deliver your Motorhome to Warrantor or Warrantor's authorized servicing dealer at your cost and expense. It is reasonable to expect some service items to occur during the warranty period. The performance of warranty repairs shall not extend the original warranty coverage period. Further, any performance of repairs after the warranty coverage period has expired or any performance of repairs to component parts and appliances excluded from coverage shall be considered "good will" repairs, which shall not alter the express terms of this limited warranty.

Warrantor may use new and/or remanufactured parts and/or components of substantially equal quality to complete any repair.

Defects and/or damage to interior and exterior surfaces, trim, upholstery and other appearance items may occur at the factory during manufacture, during delivery of the motorhome to the selling dealer or on the selling dealer's lot. Normally, any such defect or damage is detected and corrected at the factory or by the selling dealer during the inspection process performed by the Warrantor and the selling dealer. If, however, you discover any such defect or damage when you take delivery of the motorhome, you must notify your dealer or Warrantor within five days of the date of purchase to have repairs performed to the defect at no cost to you as provided by this Limited Warranty.

If either three or more unsuccessful repair attempts have been made to correct any covered defect that you believe substantially impairs the value, use or safety of your motorhome or repairs to any covered defect(s), which you believe substantially impairs the value, use or safety of your motorhome, have taken 30 or more days to complete, you must, to the extent permitted by law, notify Warrantor directly in writing of the failure to successfully repair the defect(s) so that Warrantor can become directly involved in exercising a final repair attempt for the purpose of performing a successful repair to the identified defect(s).

How To Get Service

The Warranty Registration form must be returned to Warrantor promptly upon purchase to assure proper part replacement and repair of your motorhome. Failure to return the warranty registration form will not affect your rights under the Limited Warranty so long as you can furnish proof of purchase. For warranty service simply contact one of Warrantor's authorized service centers for an appointment, then deliver your motorhome (at your expense) to the service center. If you need assistance in locating an authorized warranty service facility, contact Warrantor's **Warranty Department (1-877-466-6226)**. The mailing address is:

Warranty Department
91320 Coburg Industrial Way
Coburg, Oregon 97408

In the event the motorhome is inoperative due to malfunction of a warranted part, Warrantor will pay the cost of having the motorhome towed to the nearest authorized repair facility provided you notify Warrantor prior to incurring the towing charges to receive directions to the nearest repair facility.

Because Warrantor does not control the scheduling of service work by its authorized servicing dealers, you may encounter some delay in scheduling and/or in the completion of the repairs.

What the Warranty Does Not Cover

This Limited Warranty does not cover: any motorhome sold or registered outside of the United States or Canada; items which are added or changed after the motorhome leaves Warrantor's possession; items that are working as designed but which you are unhappy with because of the design; normal wear and usage, such as fading or discoloration of fabrics, or the effects of condensation inside the motorhome; defacing, scratching, dents and chips on any surface or fabric of the motorhome, not caused by Warrantor; routine maintenance, including by way of example wheel alignments; the automotive chassis and power train, including, by way of example the engine, drivetrain, steering and handling, braking, wheel balance, muffler, tires, tubes, batteries and gauges; appliances and components covered by their own manufacturer's warranty including, by way of example the microwave, refrigerator, ice maker, stove, oven, generator, roof air conditioners, hydraulic jacks, VCR, television(s), water heater, furnace, stereo, radio, compact disc player, washer, dryer, inverter and cellular phone; or flaking, peeling and chips or other defects or damage in or to the exterior or finish caused by rocks or other road hazards, the environment including airborne pollutants, salt, tree sap and hail.

Events Discharging Warrantor From Obligation Under Warranty

Misuse or neglect, accidents, unauthorized alteration, failure to provide reasonable and necessary maintenance (See Owner's Manual), damage caused by off road use, collision, fire, theft, vandalism, explosions, overloading in excess of rated capacities, and odometer tampering shall discharge Warrantor from any express or implied warranty obligation to repair any resulting defect.

Disclaimer of Consequential & Incidental Damages

THE ORIGINAL PURCHASER OF THE MOTORHOME AND ANY PERSON TO WHOM THE MOTORHOME IS TRANSFERRED, AND ANY PERSON WHO IS AN INTENDED OR UNINTENDED USER OR BENEFICIARY OF THE MOTORHOME, SHALL NOT BE ENTITLED TO RECOVER FROM WARRANTOR ANY CONSEQUENTIAL OR INCIDENTAL DAMAGES RESULTING FROM ANY DEFECT IN THE MOTORHOME. THE EXCLUSION OF CONSEQUENTIAL AND INCIDENTAL DAMAGES SHALL BE DEEMED INDEPENDENT OF, AND SHALL SURVIVE, ANY FAILURE OF THE ESSENTIAL PURPOSE OF ANY LIMITED REMEDY. Some states do not allow the exclusion or limitation of consequential or incidental damages, so the above exclusions may not apply to you.

THESE WARRANTIES ARE NOT INTENDED TO "EXTEND TO FUTURE PERFORMANCE." ANY ACTION TO ENFORCE THESE EXPRESS OR ANY IMPLIED WARRANTIES SHALL NOT BE COMMENCED MORE THAN NINETY (90) DAYS AFTER THE EXPIRATION OF THE ONE YEAR WARRANTY COVERAGE PERIOD DESIGNATED ABOVE. IF YOU USE YOUR MOTOR HOME FOR COMMERCIAL OR BUSINESS PURPOSES, ANY ACTION TO ENFORCE THESE EXPRESS OR ANY IMPLIED WARRANTIES SHALL NOT BE COMMENCED MORE THAN ONE YEAR AFTER THE EXPIRATION OF THE NINETY (90) WARRANTY COVERAGE PERIOD DESIGNATED ABOVE. THE PERFORMANCE OF REPAIRS SHALL NOT SUSPEND THIS LIMITATIONS PERIOD FROM EXPIRING. THESE TERMS AND ALL EXPRESS AND IMPLIED WARRANTY DISPUTES BETWEEN WARRANTOR AND PURCHASER SHALL BE GOVERNED BY THE SUBSTANTIVE LAWS OF THE STATE OF INDIANA, WITHOUT REGARD TO CONFLICTS OF LAW RULES. Some states do not allow the reduction in the statute of limitations or a choice of law provision, so the above reduction in the statute of limitations and/or choice of law provision may not apply to you.

THIS WARRANTY GIVES YOU SPECIFIC LEGAL RIGHTS. YOU MAY ALSO HAVE OTHER RIGHTS, WHICH VARY FROM STATE TO STATE.

101503

WARRANTY - LIMITED:
2005 ROADMASTER CHASSIS

ROADMASTER CHASSIS LIMITED WARRANTY

What the Period of Coverage Is:

If you use the Roadmaster Chassis that your motorhome is mounted upon for only recreational travel and family camping purposes, the Limited Warranty provided by Roadmaster ("Warrantor") covers your Roadmaster Chassis for thirty-six (36) months from the original retail purchase date or the first 36,000 miles of use, whichever occurs first.

If you use the Roadmaster Chassis that your motorhome is mounted upon for any rental, commercial or business purposes whatsoever, the Limited Warranty provided by Warrantor covers your new Roadmaster Chassis for Ninety (90) days from the original retail purchase date of the motorhome or the first 24,000 miles of use, whichever occurs first. A conclusive presumption that the Roadmaster Chassis has been used for commercial and/or business purposes arises if you have filed a federal or state tax form claiming any business tax benefit related to your ownership of the motorhome.

Limitations of Implied Warranties

ANY IMPLIED WARRANTIES ARISING BY WAY OF STATE LAW, INCLUDING ANY IMPLIED WARRANTY OF MERCHANTABILITY AND ANY IMPLIED WARRANTY OF FITNESS FOR A PARTICULAR PURPOSE, ARE LIMITED IN DURATION TO THE TERM OF THIS LIMITED WARRANTY AND ARE LIMITED IN SCOPE OF COVERAGE TO THOSE PORTIONS OF THE ROADMASTER CHASSIS COVERED BY THIS LIMITED WARRANTY. Warrantor disclaims all implied and express warranties, including the implied warranty of merchantability and the implied warranty of fitness for a particular purpose, on components and appliances excluded from coverage as set forth below. There is no warranty of any nature made by Warrantor beyond that contained in this Limited Warranty. No person has authority to enlarge, amend or modify this Limited Warranty. Any dealer selling a motorhome assembled upon a Roadmaster Chassis is not the Warrantor's agent but is an independent entity. Warrantor is not responsible for any undertaking, representation or warranty made by any dealer or other person beyond those expressly set forth in this Limited Warranty. Some states do not allow limitations on how long an implied warranty lasts, so the above limitation may not apply to you.

What the Warranty Covers

Warrantor's Limited Warranty covers defects in the manufacture of the Roadmaster Chassis and defects in materials used to manufacture the Roadmaster Chassis.

What We Will Do to Correct Problems

Warrantor will repair and/or replace, at its option, any covered defect if: (**1**) you notify Warrantor or one of its authorized servicing dealers of the defect within the warranty coverage period and within five (5) days of discovering any such defect; and (**2**) you deliver the Roadmaster Chassis to Warrantor or Warrantor's authorized servicing dealer at your cost and expense. It is reasonable to expect some service items to occur during the warranty period. The performance of warranty repairs shall not extend the original warranty coverage period. Further, any performance of repairs after the warranty coverage period has expired or any performance of repairs to component parts and appliances excluded from coverage shall be considered "good will" repairs, which shall not alter the express terms of this limited warranty.

Warrantor may use new and/or remanufactured parts and/or components of substantially equal quality to complete any repairs.

Defect and/or damage to the Roadmaster Chassis may occur during manufacture at the factory, during delivery of the motorhome to the selling dealer or on the selling dealer's lot. Normally, any factory defect or damage is detected and corrected at the factory or by the selling dealer during the inspection process performed by the Warrantor and the selling dealer. If, however, you discover any such defect or damage when you take delivery of the Roadmaster Chassis, you must notify your dealer or Warrantor within five days of the date of purchase to have repairs performed to any such defect at no cost to you as provided by this Limited Warranty.

If either three or more unsuccessful repair attempts have been made to correct any covered defect that you believe substantially impairs the value, use or safety of your motorhome or repairs to any covered defect(s), which you believe substantially impairs the value, use or safety of your motorhome, have taken 30 or more days to complete, you must, to the extent permitted by law, notify Warrantor directly in writing of the failure to successfully repair the defect(s) so that Warrantor can become directly involved in exercising a final repair attempt for the purpose of performing a successful repair to the identified defect(s).

How to Get Service

For warranty service simply contact one of Warrantor's authorized service centers for an appointment, then deliver your Roadmaster Chassis (at your expense) to the service center. If you need assistance in locating an authorized warranty service facility, contact Warrantor's **Warranty Department** (**1-877-466-6226**). The mailing address is:

Warranty Department
91320 Coburg Industrial Way
Coburg, Oregon 97408

In the event the Roadmaster Chassis is inoperative due to malfunction of a warranted part, Warrantor shall pay the cost of having the Roadmaster Chassis that the motorhome is mounted upon towed to the nearest authorized repair facility provided you notify Warrantor prior to incurring the towing charges to receive directions to the nearest repair facility.

Because Warrantor does not control the scheduling of service work by its authorized servicing dealers, you may encounter some delay in scheduling and/or in the completion of the repairs.

What the Warranty Does Not Cover

This Limited Warranty does not cover: modifications and alterations to the Roadmaster Chassis by others; the motorhome that is mounted upon the Roadmaster Chassis, including by way of example the motorhome manufacturer's design, manufacture, assembly and/or installation of the side walls, roof, windows, flooring, electrical system, plumbing system, LP-Gas system, appliances and slide outs; items that are working as designed but which you are unhappy with because of the design; normal wear and usage; routine maintenance including by way of example wheel alignments; component parts covered by their own manufacturer's warranty, including by way of example the engine, transmission, tires, tubes, batteries, exhaust system and the emission control systems; and, flaking, peeling rusting and chips or other defects or damage in or to the frame and frame cross members caused by rocks or other road hazards and the environment including airborne pollutants and salt.

Events Discharging Warrantor from Obligation Under Warranty

Misuse or neglect, accidents, unauthorized alteration, failure to provide reasonable and necessary maintenance (See Owner's Manual), damage caused by off road use, collision, fire, theft, vandalism, explosions, overloading in excess of rated capacities, and odometer tampering shall discharge Warrantor from any express or implied warranty obligation to repair any resulting defect.

Disclaimer of Consequential & Incidental Damages

THE ORIGINAL RETAIL PURCHASER OF THE ROADMASTER CHASSIS AND ANY PERSON TO WHOM THE ROADMASTER CHASSIS IS TRANSFERRED, AND ANY PERSON WHO IS AN INTENDED OR UNINTENDED USER OR BENEFICIARY OF THE ROADMASTER CHASSIS, SHALL NOT BE ENTITLED TO RECOVER FROM WARRANTOR ANY CONSEQUENTIAL OR INCIDENTAL DAMAGES RESULTING FROM ANY DEFECT IN THE MOTORHOME. THE EXCLUSION OF CONSEQUENTIAL AND INCIDENTAL DAMAGES SHALL BE DEEMED INDEPENDENT OF, AND SHALL SURVIVE, ANY FAILURE OF THE ESSENTIAL PURPOSE OF ANY LIMITED REMEDY. Some states do not allow the exclusion or limitation of consequential or incidental damages, so the above exclusions may not apply to you.

Legal Remedies

THESE WARRANTIES ARE NOT INTENDED TO "EXTEND TO FUTURE PERFORMANCE." ANY ACTION TO ENFORCE THESE EXPRESS OR ANY IMPLIED WARRANTIES SHALL NOT BE COMMENCED MORE THAN NINETY (90) DAYS AFTER THE EXPIRATION OF THE ONE YEAR WARRANTY COVERAGE PERIOD DESIGNATED ABOVE. IF YOU USE YOUR ROADMASTER CHASSIS FOR COMMERCIAL OR BUSINESS PURPOSES, ANY ACTION TO ENFORCE THESE EXPRESS OR ANY IMPLIED WARRANTIES SHALL NOT BE COMMENCED MORE THAN ONE YEAR AFTER THE EXPIRATION OF THE NINETY (90) DAY WARRANTY COVERAGE PERIOD DESIGNATED ABOVE. THE PERFORMANCE OF REPAIRS SHALL NOT SUSPEND THIS LIMITATIONS PERIOD FROM EXPIRING. THESE TERMS AND ALL EXPRESS AND IMPLIED WARRANTY DISPUTES BETWEEN WARRANTOR AND PURCHASER SHALL BE GOVERNED BY THE SUBSTANTIVE LAWS OF THE STATE OF INDIANA, WITHOUT REGARD TO CONFLICTS OF LAW RULES. Some states do not allow the reduction in the statute of limitations or a choice of law provision, so the above reduction in the statute of limitations and/or choice of law provision may not apply to you.

THIS WARRANTY GIVES YOU SPECIFIC LEGAL RIGHTS. YOU MAY ALSO HAVE OTHER RIGHTS, WHICH VARY FROM STATE TO STATE.

Roadmaster Chassis Division
Monaco Coach Corporation
91320 Coburg Industrial Way
Coburg, Oregon 97408

101503

WARRANTY INFORMATION FILE

In addition to this Owner's Manual you will find a Warranty Information File in your unit. This file contains valuable documents about your motorhome's systems and equipment. Many of the component manufacturer's warranty registration cards can be found in the box. They will need to be filled out and mailed. Be sure you read and understand all the information in this file to help you safely operate, maintain and troubleshoot those items.

Additional Information:

Changes, additions and supplemental information in the form of Manual Addendums and "Tech Tips" can be obtained by visiting our Website at **www.monaco-online.com**. Select one of the products from the product lineup. Go to the Service menu. A submenu will appear.

It may also be helpful to browse the "Tech Tips" menu for the other product lines. The tips may not completely apply to your particular model but information contained therein can be useful.

MANUAL ADDENDUMS

www.monaco-online.com

Click on the the **Monaco** logo, Place curser on **SERVICE** link and choose **MANUAL ADDENDUMS** from the drop down menu.

TECH TIPS

Find current and archived tech tips with answers to frequently asked questions at:

www.monaco-online.com

Click on the **Monaco**,logo. Place curser on **SERVICE** link and choose **TECH TIPS** from the drop down menu.

WOOD FINISH

Because no two trees look alike, authentic woods vary in color and character markings such as streaks, knots and grain patterns. Since the stains may attach differently to these grain patterns, some natural light and dark areas may result. The beauty lies in these natural variations of color and grain that give each cabinet its own individual charm.

The beauty of these products is protected with a furniture-quality exterior finish. After a period of time, there may be minimal changes in the finish color as it ages in its surrounding conditions. This is an inherent characteristic of this particular finish, and the natural aging process adds to the unique appearance of the cabinetry. Due to the minor differences in tone, it may not be possible to match the finish color of existing cabinets exactly when replacing doors or adding additional cabinets at a later date.

The foregoing is not a warning. See the Limited Warranty or call (877) 466-6226 for warranty information and limitations.

2005 Signature
Sections

General Information ~ 1

Driving & Safety ~ 2

Exterior & Interior Care ~ 3

Appliances ~ 4

Equipment ~ 5

Water Systems ~ 6

LP-Gas Systems ~ 7

Electrical Systems - House ~ 8

Electrical Systems - Chassis ~ 9

Chassis Information ~ 10

Index ~ pp 529

The information contained in this document is intended to reflect standard and optional equipment included in a typically equipped model at the time of delivery to the initial retail owner. Your actual unit may vary from this document as a result of optional equipment that is not generally offered on this model. In the case that you are not the initial retail owner of the unit, this document will not reflect modifications that may have been performed by previous owners.

Product information and specifications are shown herein as of the time of printing. The motorhome manufacturer reserves the right to change product specifications, designs and standard equipment without notice and without incurring obligation.

©Copyright Monaco Coach Corporation. All rights reserved. All other trademarks or registered trademarks are property of their respective holders. Brand name products of other companies mentioned in this manual are not endorsed by the manufacturer of the motorhome.

04273 KS

Signature 2005

General Information ▪ Section 1

SAFETY TERMS.....15
CUSTOMER RELATIONS.....17
REPORTING SAFETY DEFECTS.....17
TAKING DELIVERY.....17
Monaco Responsibilities.....17
Dealer Responsibilities.....18
Customer Responsibilities.....18
SERVICE SUGGESTIONS.....18
Prepare for the Appointment.....19
Prepare a List.....19
Be Reasonable With Your Requests.....19
No Looking Over the Technician's Shoulder.....19
Inspect the Work Properly.....19
GLOSSARY OF TERMS.....20
VENDOR LIST.....24
WARRANTY TRANSFER APPLICATION - LIMITED.....31

Safety Terms:

Many of the safety terms are personal safety instructions. Definitions for the terms are listed below. It is important to thoroughly read and understand the safety instructions displayed throughout the manual. Failure to comply with specific instructions may result in personal injury or death. Many instructions are required by National Safety Associations.

WARNING:
Warnings contain information regarding personal safety and/or pertaining to potential extensive or permanent damage to the motorhome or its components by means of hazards or improper use.

CAUTION:
Cautions pertain to potential damage to the motorhome and/or its components.

POISON:
A warning or caution pertaining to safety and/or use of a poisonous substance or harmful chemical.

NOTE:
Information and reminders concerning proper operation of the motorhome and/or its components.

INSPECTION:
Inspection of the motorhome and/or its components is required. Additional instruction may follow.

LUBE:
Lubrication, or addition of a lubricant product, to the motorhome and/or a specified component or part is required. Additional instruction may follow.

ASSEMBLE or REPAIR:
Assembly, disassembly or installation of a component or part, and/or repair to the motorhome may be required. Assistance of Technical Support or Technician may be necessary.

INFORMATION:
References to additional information regarding operation of the motorhome and/or its components found in additional sources, other than the Owner's Manual. Also refers to the WARRANTY INFORMATION FILE, found within the Warranty Information Box in the motorhome.

TIP:
Tips contain information, helpful hints and/or suggestion for ease of operation of the motorhome or its components.

CUSTOMER RELATIONS

Only by ensuring your confidence and satisfaction with our products and services can we have continued success as a manufacturer of motorhomes. We believe a good relationship with our customers is just as important as improving the technical excellence of our products. Your authorized dealer is pleased to help you with instructions about your motorhome and to offer service when you need it. If problems remain after you have consulted your dealer you are invited to contact our Customer Service Department. Please have all pertinent information (serial numbers, model number, etc.) when calling. We will work with the dealer and see that every attempt to resolve the matter is made.

Customer Service Department
91320 Coburg Industrial Way
Coburg, Oregon 97408
877-466-6226

REPORTING SAFETY DEFECTS

If you believe that your motorhome has a defect which could cause a crash or could cause injury or death, you should immediately inform the National Highway Traffic Safety Administration (NHTSA) in addition to notifying Monaco. If NHTSA receives similar complaints, it may open an investigation, and if it finds that a safety defect exists in a group of motorhomes, it may order a recall or remedy campaign. However, NHTSA cannot become involved in individual problems between you, your dealer or Monaco. To contact NHTSA you may either call the Auto Safety Hot line toll-free at 1-800-424-9393 (or 1-202-366-0123 in the Washington D.C. area) or write to:

NHTSA
U.S. Department of Transportation
400 7th Street, S.W.
Washington, DC 20590
www.nhtsa.dot.gov

TAKING DELIVERY
Monaco Responsibilities

Your motorhome has been manufactured to the highest quality and standards by factory trained personnel. Quality inspections are performed throughout the manufacturing process of your motorhome. The motorhome has been carefully and almost completely hand assembled in our factory. Prior to the motorhome arriving at the dealership, all systems have been carefully tested and inspected to ensure optimum performance. The necessary forms and required manuals have been placed in the motorhome at the time of shipment to the dealership.

Dealer Responsibilities

The dealer must perform additional pre-delivery inspections and system checks, assist in the customer's understanding of the Limited Warranty and assist in completing any necessary forms. They must do a customer orientation to the motorhome, its systems, components and their operation.

The dealer should also ensure the customer receives a complete Owner's Packet with warranty cards and registrations for the motorhome and for separately warranted products, including detailed operating and maintenance instructions. The dealer is responsible for performing a review of the Limited Warranty provisions with the customer, while stressing the importance of mailing warranty cards and registrations to the manufacturers within the prescribed time limit to avoid loss of warranty coverage. They must assist the customer in completing these forms and locating serial numbers. They should request that the customer reads all warranty information when possible and explain any provision not clearly understood.

The dealer should instruct the customer on how to obtain local and out-of-town service on the motorhome and its various individual warranted components, whether the service is warrantable or out of warranty.

Customer Responsibilities

As a new motorhome owner you are responsible for regular and proper maintenance. This will help you prevent conditions arising from neglect that are not covered by your Limited Warranty. Maintenance services should be performed in accordance with this Owner's Manual, and any other applicable manuals. As the owner, it is your responsibility and obligation to return the motorhome to an authorized dealer for repairs and service (See the Limited Warranty). Since the authorized dealer where you purchased your new motorhome is responsible for its proper servicing before delivery, and has an interest in your continued satisfaction, we recommend that Inspection, Warranty and Maintenance Services be performed by the dealership. We suggest that you take your new motorhome on a weekend shakedown before leaving on an extended trip.

SERVICE SUGGESTIONS

Know when to take your motorhome in for service. Give some thought to the appointment time. There are several things to consider when selecting a time for service. Location of the service center and the time of year can be a major issue. Monday and Friday are busy days for most dealers. Therefore, it makes sense to make a mid-week appointment whenever possible. Ask your dealer if additional time is needed for check in and completion of paperwork.

Prepare for the Appointment

If you're having warranty work done, be sure to have your warranty registration papers with you. All work to be performed may not be covered by the warranty; be sure to discuss additional charges with the service manager. Keep a maintenance log of your motorhome service history. This can often provide a clue to the current problem.

Prepare a List

Make a written list of specific repairs needed. It is important the service manager be aware of all previous work which has been done on your motorhome. For example: if the motorhome has been repaired due to an accident. While this may not seem important, it could have a significant effect on the dealer's diagnosis of a problem.

Be Reasonable With Your Requests

Do not leave a list of 20 items to be serviced and expect to have the motorhome back by 5:00 p.m. If you list a number of items, and must have your motorhome back by the end of the day, discuss the situation with the service manager and list items in order of priority. Some items may not be able to be repaired due to work loads or parts availability. Expect to make a second appointment for work not completed or for the long, drawn-out repair item.

No Looking Over the Technician's Shoulder

Please do not be offended when you are told you cannot watch the work being done. Many service area insurance requirements forbid the admission of customers into the service work area.

Inspect the Work Properly

Check out the service or repair job when you pick up your motorhome and notify the service manager of any dissatisfaction. If circumstances prevent returning for immediate corrective work, make an appointment as soon as possible.

GLOSSARY OF TERMS

AC Electricity - Alternating current also known as household power.

Air Compressor - Pumps air to and builds air pressure in an air system.

Air Dryer - Cools, filters and dries the air delivered by an air compressor.

Air Governor - Controls the operation of the air compressor by constantly monitoring air pressure in the supply tank of the air system. The air governor initiates the unload cycle when the cut-out pressure is reached.

Ampere (Amp) - The unit of measure of electron flow rate of current through a circuit.

Ampere-hour (Amp-hr. AH) - A unit of measure for a battery electrical storage capacity, obtained by multiplying the current in amperes by the time in hours of discharge. (Example: A battery which delivers 5 amperes for 20 hours, delivers 5 amperes times 20 hours, or 100 Amp-Hr. of capacity.)

ANSI - American National Standards Institute.

ASTM - American Society for Testing and Materials.

Black Water - Term associated with the sewage holding tank. The toilet drains directly into this tank.

CCA - Cold Cranking Amperage is the amount of current a battery can deliver for 30 seconds at 0° F without dropping below a specified voltage, usually 10.5 Volts DC.

Chassis Battery - Powers chassis 12 Volt accessories and starts engine.

Circuit - An electric circuit is the path of an electric current. A closed circuit has a complete path. An open circuit has a broken or disconnected path.

City Water - A term associated with the water supply that you hook-up to at campgrounds. It is called city water because water is pulled from a central source (like in a city) and not the fresh water tank.

Compressor Load Cycle - The time during which the air compressor is building air pressure in an air system.

Compressor Unload Cycle - The time during which the air compressor is idling and is not building air pressure in an air system.

Curbside - This refers to the side of the motorhome which faces the curb when it is parked. Often called the door side or the passenger's side.

Current - The rate of flow of electricity or the movement rate of electrons along a conductor. It is comparable to the flow of a stream of water. The unit of measure for current is the ampere.

Current - Alternating (AC) - A current that varies periodically in magnitude and direction. A battery does not deliver alternating current. Also referred to as shore power, utility power, inverter power, generator power, etc.

Current - Direct (DC) - Power that is stored in a battery bank or supplied by photovoltaics, alternator, chargers and DC generators. Direct current is also known as battery power.

Cut-In Pressure - The pressure level in the air system supply tank which triggers the compressor load cycle. May apply to some water systems, such as water pump, accumulator tank, etc.

Cut-Out Pressure - The pressure level in the air system supply tank which triggers the compressor unload cycle. May apply to some water systems, such as water pump, accumulator tank, etc.

Cycle - In a battery, one discharge plus one recharge equals one cycle.

Desiccant - A granular substance that has a high affinity for water and is used to retain moisture from the air stream flowing through the air dryer cartridge.

Drain Trap - This is a curve that is in all drains. Water is trapped in the curve and this creates a barrier so tank odors cannot escape through the drain.

Dry Camping - Camping in the motorhome when there is no city water hook-up or shore power. In other words, using only the water and power that is in the motorhome and not from another source.

Drying Cycle - The time during which the air dryer cools, filters and removes moisture from the air delivered by the air compressor. The drying cycle begins and ends the same as the compressor load cycle.

Dump Station - A site where the waste (grey) and sewage (black) tanks can be drained. In most states it is illegal to drain waste tanks anywhere other than at a dump station.

Dump Valve - Another name for the T-handle valve used to drain the sewage (black) and waste (grey) tanks.

Escape (Egress) Window - The formal name for the emergency window located in the rear of the motorhome. Egress windows can be easily identified by their red handles.

Full Hook-Up Site - A campground that has city water, shore power and sewer hook-ups or connections available.

Grey Water - Term associated with the waste water holding tank. Water from the sink drains, the shower and the washer-dryer (if equipped) go into this tank.

House Battery - Powers 12 Volt lights and accessories inside motorhome.

LED - (Light Emitting Diode) Indicator light.

Low Point Drain - The lowest point in the plumbing. Drains are placed here so that water will drain out of the lower end of the motorhome. These drains must be closed when you fill the water tank.

OEM - Term for Original Equipment Manufacturer.

OHM - A unit for measuring electrical resistances.

Ohm's Law - Express the relationship between Volt (E), amperes (I) in an electrical circuit with resistance (R). It can be expressed as follows: E = IR. If any two of the three values are known, the third value can be calculated by using the above formula.

Potentiometer - A device for measuring an unknown potential difference or electromotive force.

Pounds Per Square Inch Gauge (psig) - Pressure measured with respect to that of the atmosphere. This is a pressure gauge reading in which the gauge is adjusted to read zero at the surrounding atmospheric pressure. It is commonly called gauge pressure.

Purge - The initial blast of air (decompression) from the air dryer purge valve at the beginning of the air compressor.

Purge Cycle - The time during which the air dryer is undergoing purge and regeneration. This cycle starts at the beginning of the compressor unload cycle and normally ends well before the beginning of the compressor load cycle.

Regeneration - The mild backflow of air through the air dryer and out the purge valve that begins immediately after the purge and lasts normally 10 to 15 seconds. This backflow of air, from the air system and through the air dryer, removes moisture from the desiccant cartridge and prepares the air dryer for the next compressor load cycle.

Roadside - This refers to the side of the motorhome which faces the road when it is parked. Often called the off-door side or the driver's side.

SCA - Term for Supplemental Coolant Additive. Chemical added to coolant for diesel engines to help prevent cylinder liner pitting and internal corrosion.

Shore Line - This is the electrical cord which runs from the motorhome to the campground 120 Volt electrical supply.

Shore Line Plug - The 120/240 Volt AC outlet allows the motorhome to be hooked up to a campground facility.

Stinger - An arm attachment on a tow truck that is used to lift the motorhome slightly so that it can be towed.

VIM - Vehicle Interface Module. Component used to interface engine and transmission functions with the motorhome chassis operation.

Volt - The unit of measure for electric potential.

Watt - The unit for measuring electrical power, i.e. the rate of doing work, in moving electrons by or against an electric potential.

Wet Cell Battery - A type of battery that uses liquid as an electrolyte. This type of battery requires periodic maintenance such as cleaning the connections and checking the electrolyte level.

VENDOR LIST

Air Bags
Firestone (Tag Axle)
317-818-8600
www.bridgestone-firestone.com

Air Conditioner - Dash
SCS/Frigette
800-545-6341
www.frigette.com

Air Conditioner - Roof
Dometic Corp.
219-463-4858
www.dometic.com

Air Filter
Donaldson
800-374-1374
www.donaldson.com

Air Dryer
Wabco
800-535-5560
www.meritorwabco.com

Air Mattress (Optional)
Comfortaire
800-759-0594
www.comfortaire.com

Aladdin™ System
Monaco Coach Corporation
Technical Support
877-466-6226

Alternator
Leece-Neville
800-346-8093
www.prestolite.com

Aqua-Hot
Vehicle Systems Inc.
800-685-4298
www.hyrdro-hot.com

Awnings
Girard Systems
800-382-8442
www.girardrv.com

Axle - All
Eaton Corporation
800-328-6687
www.truck.eaton.com

Batteries
Interstate
800-272-6548
www.interstatebatteries.com

AGM (All-Electric)
Lifeline Distributors, Inc.
800-527-3224
www.lifelinebatteries.com

Backsplash
ICTC
800-545-0622
www.ictctile.com

Battery Isolator
Intellitec
800-251-2408
www.intellitecsve.com

Brakes - Anti-Lock Brake System
Eaton
800-826-4357
www.truck.eaton.com

Brakes - Automatic Traction Control
Eaton
800-826-4357
www.truck.eaton.com

Carbon Monoxide Detector
Safe-T-Alert
800-383-0269
www.safetalert.com

Citizen Band Radio
Cobra
773-889-3087
www.cobraelec.com

Collision Warning System (Optional)
Eaton Corp.
800-826-4357
www.truckeaton.com

Cooktop (120 Volt)
Seaward Products
562-699-7997
www.seawardproducts.com

Cooktop (LP-Gas)
KitchenAid
800-422-1230
www.kitchenaid.com

Countertops
DuPont Corian
800-426-7426
www.corian.com

Dash Radio
Pioneer
800-872-4159
www.pioneerelectronics.com

Dishwasher (Optional)
Fisher & Paykel
800-863-5394
www.usa.fisherpaykel.com

Engine
Cummins
800-343-7357
www.cummins.com

Detroit
800-445-1980
www.detroitdiesel.com

Entry Step
Kwikee
800-736-9961
www.kwikee.com

Fan - Exhaust
Fan-Tastic Vent
800-521-0298
www.fantasticvent.com

Faucet - Bath
Delta Faucets
800-345-3358
www.deltafaucet.com

Faucet - Kitchen
Grohe America, Inc.
630-582-7711
www.groheamerica.com

Filter - Coolant
Detriot - Power Cool
800-445-1980
www.detroitdiesel.com

Filter - Hydraulic
Racor Fluid Filters (Early Models)
800-344-3286
www.parker.com/recor

MP Filtri USA (Later Models)
888-263-0090
www.mpfiltriusa.com

Filter - Oil
Detriot - Power Guard
800-445-1980
www.detroitdiesel.com

Filter - Primary Fuel
Racor Fluid Filters
800-344-3286
www.parker.com/racor/

Filter - Secondary Fuel (Cummins)
Fleetgard
800-223-4583
www.fleetgard.com

Filter - Secondary Fuel (Detriot)
Detriot - Fuel Pro
800-445-1980
www.detroitdiesel.com

Fire Extinguisher
Kidde
800-880-6788
www.kiddesafety.com

Flooring - Carpet
Fabrica
800-854-0357
www.fabrica.com

Flooring - Plank
Wilsonart
800-433-3222
www.wilsonart.com

Flooring - Tile
Crossville Ceramics
931-484-2110
www.crossville-ceramics.com

ICTC
800-545-0622
www.ictctile.com

Fuel Sender
Centriod Products
800-423-3574
www.centroidproducts.com

Generator
Onan
800-888-6626
www.onan.com

Heat Exchangers
Heater Craft
208-687-4400
www.heatercraft.com

Heater Baseboard (Optional)
Cadet Manufacturing
360-694-8668
www.cadetco.com

Home Theater
Bose
800-999-2673
www.bose.com

Insta-Hot
Insinkerator
800-558-5700
www.insinkerator.com

Inverter
Xantrex Technology
800-446-6180
www.xantrex.com

Keyless Entry
Essex Electronics
1-800-539-5377
www.keyless.com

Leveling System - Air
HWH Corporation
800-494-3213
www.hwh.com

Leveling System - Hydraulic (Optional)
RVA
760-746-5732
NO WEBSITE

LP-Gas Detector
MTI Industries
800-383-0269
www.mtiindustries.com

LP-Gas Tank
Manchester
800-877-8265
www.mantank.com

Microwave
Sharp Electronics Corp.
800-237-4277
www.sharp-usa.com

Mirror - Ceiling
Wilsonart
800-433-3222
www.wilsonart.com

Navigation System (Optional)
Pioneer
800-872-4159
www.pioneerelectronics.com

OnStar® (Optional)
Riverpark Inc
800-442-7717
www.riverparkinc.com

Outside Mirrors
Velvac Mirror
800-783-8871
www.velvac.com

Power Cord Reel
Glendinning Marine
800-783-8871
www.glendinning.com

Power Hose Reel
Glendinning Marine
800-783-8871
www.glendinning.com

Power Sunvisor
Carefree
800-621-2617
www.carefreeofcolorado.com

Rear Vision System
Mito Corporation
800-433-6486
www.mitocorp.com

Refrigerator - Residential (Optional)
Whirlpool
800-253-1301
www.whirlpoolcorp.com

Refrigerator - Standard
Norcold
800-543-1219
www.norcold.com

Safe
Allied Safe
800-448-8338
www.alliedsafe.com

Satellite Radio (Optional)
XM Satellite
800-967-2346
www.xmradio.com

Satellite Receiver
Hughes
800-274-8995
www.hns.com

Satellite System
KVH (Dish)
401-847-3327
www.kvh.com

TracStar - In-Motion (Optional)
407-650-9054
www.tracstar.net

Security System (Optional)
Viper - Directed Electronics Inc.
800-876-0800
www.directed.com

Shock Absorbors
Bilstein
800-537-1085
www.bilstein.com

Slide-out Motor
HWH Corporation
800-321-3494
www.hwhcorp.com

Smoke Detector
MTI Industries
800-383-0269
www.mtiindustries.com

Solar Panels
AM Solar
541-284-2426
www.amsolar.com

Steering Gear
TRW
800-879-0899
www.trw.com

Steering Wheel (Smart Wheel)
Vehicle Improvement Products
847-395-7250
www.vipwheels.com

Storage Trays (Optional)
Kwikee
800-736-9961
www.kwikee.com

Television - LCD
Sharp
800-237-4277
www.sharp-usa.com

Television Antenna
Winegard
319-754-0600
www.winegard.com

Tires
Goodyear Tire & Rubber
800-399-2772
www.goodyear.com

Toilet
Sealand
800-321-9886
www.sealandtechnology.com

Transfer Switch
ESCO
574-264-4156
www.escousa.net

Transmission
Allison Transmission
800-524-2303
www.allisontransmission.com

Universal Remote (Optional)
Mito Corporation
800-433-6486
www.mitocorp.com

VCR/DVD Combo (Bedroom Only)
Panasonic
800-338-0552
www.panasonic.com

Washer-Dryer (Optional)
Splendide
800-736-4127
www.splendide.com

Whirlpool (Optional)
800-253-1301
www.whirlpool.com

Water Pump
Aquatec
800-975-9995
www.aquatec.com

Water Purifier - Bathroom
Watts Premiere
800- 774-7405
www.wattspurewater.com

Water Purifier - Galley
Ozone Technologies
920-863-2444
www.trupure.com

Wheels - Aluminum
Accuride
800-626-7096
www.accuridecorp.com

Windshield Wipers
Diesel Equipment
800-632-4959
www.dieselequipment.com

~ NOTES ~

Limited Warranty Transfer Application/Change of Owner Information

Mail to:

Monaco Coach Corporation
P.O.Box 465
Wakarusa, IN 46573
ATTN: Warranty Registration

Please read terms and representations below before signing.

Submitted By:

Name_____

Address_____

City _____State_____Zip _____

Phone _____

☐ Limited Warranty Transfer

☐ Address Change

A. Current Owner Information

First Name _____ Initial _____ Last Name _____

Vehicle Identification Number _____ Unit # (15 digits) _____ Prod/Coach # (6 digits) _____

B. New Owner Information, Transfer Coverage To:

First Name _____ Initial _____ Last Name _____ Phone Number _____

Street Address _____ Date of Transfer (If Applicable) _____

City _____ State _____ Zip _____ Odometer Reading at Transfer (If Applicable) _____

C. Signatures:

(New) Owner's Signature _____ Date _____ Selling Dealer's Signature (If Applicable) _____ Date _____

Terms & Representations

By your signature(s) on face side of this form, and in order to induce Monaco Coach Corporation to transfer its Limited Warranty, you represent the following:

1. That you have received and read a copy of the Limited Warranty.
2. You understand that the unit is to be used only for family camping and cross country travel on improved roads.
3. All information provided by you on face side of this form is true and correct.
4. You understand that you are purchasing a pre-owned recreational vehicle and Monaco Coach Corporation does not make any representation as to its present condition.

Signature 2005

Driving & Safety ▪ Section 2

DRIVING & SAFETY 35
Inspections 35
Familiarize Yourself 35
Mirror Adjust (Manual) 36
Safety Seat Belts 37
Driving Tips 40
COLLISION WARNING SYSTEM (Opt.) 44
CWS Components 44
Driver Display Unit 44
Smart Cruise® 46
Side Sensors 46
CWS Situations 47
Data Recorder 49
PRE-TRIP PREPARATIONS - CHECKLIST 50
HITCH 53
Using the Rear Receiver 53
Tow Plug Connection 54
Towing Air Brake Port (Non ABS) 55
BACKING UP A MOTORHOME 56
SET-UP PROCEDURE CHECKLIST 58
DRY CAMPING 60
BREAKING CAMP 63
EMERGENCY ROADSIDE PROCEDURES 64
OnStar® (Opt.) 65
In Case of Flat Tire 66
Light - Retractable 67
Running Out of Fuel 67
Dead Chassis Battery 68
TOWING PROCEDURES 71
Disabling Parking Brake 72
TIRES 74
Importance of Air Pressure 74
Tire Pressure Inflation Guideline 75
Tire Chart - Goodyear 75
Inspecting & Pressure 77
Air Pressure Checklist 78
Supporting When Leveling 79
Tire Vibration 79
Tire Rotation 80
Tread 80
Storage of Tires - Long Term 80
WHEEL MOUNTING 81
WEIGHING THE MOTORHOME 83
Weight Terms 83
Weight Label 88
Six-Point Weighing Example 89
Cargo Carrying Capacity Flowchart 94
Weighing Procedure Worksheet 95
Weight Record Sheet 97
VIEWS 98
Front 98
Rear 98
Roadside 99
Curbside 99
SECURITY SYSTEM (Opt.) 100
MONITOR SYSTEM - BACKUP/SURVEILLANCE 107
SAFE (Opt.) 108
SMOKE DETECTOR 108
Operation 108
Testing 109
Maintenance 109
Troubleshooting 109
CARBON MONOXIDE DETECTOR 110
Operation 111
Alarm 112
Testing 112
Cleaning & Maintenance 113
FIRE EXTINGUISHER 113
ESCAPE (EGRESS) WINDOW 114

Section two contains information on driving tips, emergency situations, towing, safety devices, weighing the motorhome and tires.

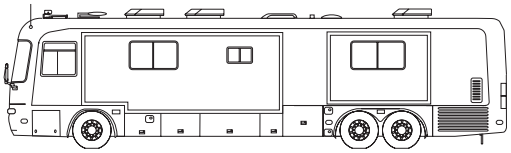

010688 no text

NOTE:
The motorhome has an electronic data recording device that may record information about direction, road speed, engine speed, brake application, steering attitude or other vehicle operating data. Data recording devices can be present in engines, transmissions, ABS (Antilock Brake Systems) or other systems affiliated with operation of the vehicle. Information from data recording devices can be examined in case of an accident. Contact the component manufacturer to learn more about these devices.

Inspections

There are significant differences between a passenger automobile and a motorhome. Always be aware of these differences when traveling. The key to safely operating a motorhome is **inspection**. Undetected problems could cause problems on the road and may result in lost time and increased repair costs. **Several states require a special license endorsement and that the motorhome be inspected prior to registration.** Know and observe the laws of the states in which you will be traveling. Laws may vary from state to state. A systematic inspection conducted prior to moving the motorhome can help ensure nothing is overlooked and will assist in familiarizing the owner with the motorhome. Prior to moving the motorhome perform a general **inspection**, which includes examining the condition of the vehicle and the surrounding area of the motorhome. Look high and low when walking around the motorhome.

Familiarize Yourself

Because the location of the driver's seat in the motorhome is higher and farther to the left than most vehicles, a different perspective of the roadway is created. Rely on the outside mirrors to line up with the center of the road and to check conditions behind the motorhome. The dashboard may include more gauges and controls than are normally found in passenger automobiles. Become familiar with these gauges and their indications before starting out.

Mirror Adjust (Manual)

Prior to starting out, adjust mirrors. It is recommended have an assistant help with the adjustments to prevent damage to the mirror or the motorhome.

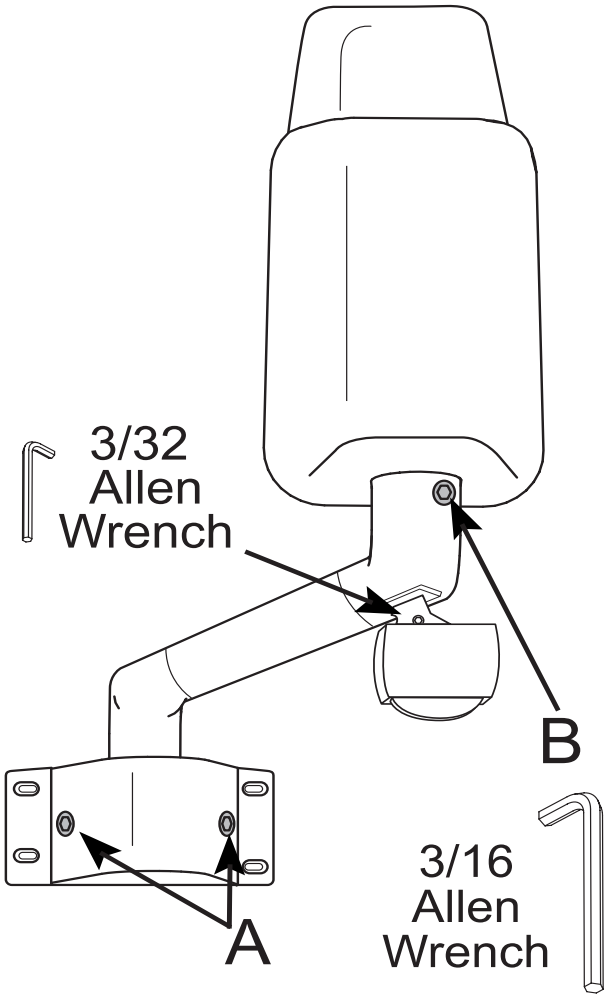

Mirror with optional "See Vision" camera

070181j

Mirror Adjusting:

- Tools needed: 3/16" and 3/32" Allen wrench.
- Adjust the driver seat to travel position.
- Using 3/16" Allen wrench, have the assistant loosen the two 3/16" Allen set screws located at the base of the mirror (see **A** on illustration).
- Adjust the mirror for a clear side view of the motorhome.
- Tighten the two base screws once proper adjustment is made.
- Use a 3/32"Allen wrench to loosen the camera. Adjust the camera angle and retighten.
- To adjust the head of the mirror, loosen the screw located at point **B**. Adjust to the left or right.
- Make sure all Allen set screws are tight.

NOTE:
Use the mirror select and adjust switch located on the roadside console to fine tune the view.

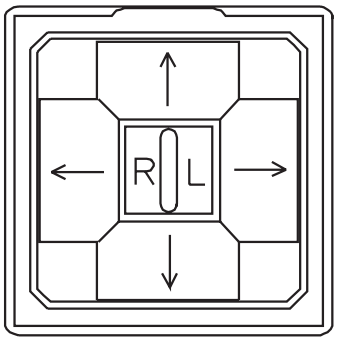

Mirror Adjust Switch

080378

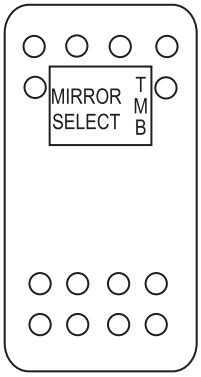

080452

Mirror Select Switch

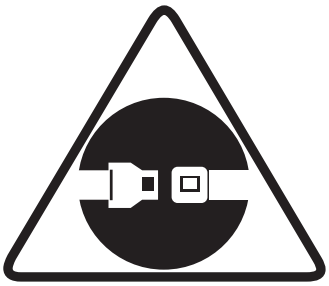

All occupants must be furnished with and use seat belts while the motorhome is moving. The driver's seat, and all other seats designed to carry passengers while the motorhome is in motion, are equipped with safety seat belts. Do not occupy beds or seats that are not equipped with a safety belt while the motorhome is in motion. The driver's seat must be locked in the forward facing position while motorhome is in motion. Do not use a seat belt on more than one person.

To fasten the seat belt, pull the belt out of the retractors and insert the tab into the buckle; you will hear a click when the tab locks into the buckle. Seat belt lengths automatically adjust to your size and sitting position. Do not route belts over armrest.

WARNING:
Safety belts are supplied at affixed seating positions. Do not occupy seats not equipped with safety belts while the motorhome is in motion. Seat belts must only be used on permanently mounted seats. Do not use a single seat belt on more than one person. Pilot and Co-pilot seats must be locked in a forward facing position with seat belts fastened while the motorhome is in motion. Avoid seat rotation while in transit.

Child Safety Seat:

Children that fit into ***Example 1*** and ***Example 2*** (on following pages) require the use of a child safety seat. In the motorhome, the child safety seat can be positioned in two places: the front passenger (co-pilot) seat and the forward facing permanently mounted booth dinette seat.

WARNING:
Children must not be transported unrestrained. Infants must be placed in approved safety seats. Small children must be restrained in child safety seats. Do not use a single seat belt on more than one child. Failure to comply with these rules can lead to injury or death.

NOTE:
Individual states and Canadian provinces may have laws that can exceed the requirements described above. It is your obligation to know and comply with the laws in the state or province in which you travel.

A child safety seat is required for any child:

- **Infants -** from birth to one year, or up to 21 pounds, the child is considered an infant. A (convertible) safety seat for an infant must be secured facing rearward. The top of the head must be below the top of the safety seat. Secure safety seat harness straps at or below the shoulders. (See Example 1).

Example 1: Convertible Seat Facing to the Rear.

- **Toddlers -** Children over 1 year and over 20-40 pounds are considered toddlers. A (convertible) safety seat for a child must be secured facing forward. The top of the head must be below the top of the safety seat. Secure safety seat harness straps should be at or above the shoulders. *(See Example 2.)* Most seats require top slot for forward-facing

- **Young Children -** Children (ages 4 to 8) over 40 pounds, unless over 4' 9", require a booster seat. The booster seat places the child's waist and shoulders at the proper height for the supplied safety belt to be effective. The top of the head must be below the top of the safety seat. *(See Example 2.)*

Example 2: High back booster seat facing forward.

WARNING:
Installation illustrations are for reference only, and are not to be used as a guide. Because there are many styles of safety and booster seats, refer to the safety seat manufacturer's manual for proper installation and how to properly install and secure the safety or booster seat.

NOTE:
Individual states and Canadian provinces may prohibit use of a safety or booster seat in the front seat.

Seat Belt Care:

Keep the belt clean and dry. To clean, use mild soap and lukewarm water. Do not clean seat belts with bleach, dye or abrasive cleansers that may weaken the belt material. Periodically inspect belts for cuts, frays or loose parts, and replace damaged parts. Do not disassemble or modify the system. Replace the seat belt assembly after a severe impact, even when damage is not obvious.

Driving Tips

downhill.eps

The motorhome is a complex vehicle that requires increased driving awareness because of its size and various components. Due to the motorhome length the turning radius will be much wider than that of a standard automobile. Always pay close attention to the perimeter of the motorhome: front, sides, rear, roof and undercarriage. Ensure the surrounding area is clear of obstacles. Utilize the driving mirrors to observe traffic conditions as well as the motorhome exterior: tires, bay doors, blind spots, etc. Use a push-pull method of steering, with both hands parallel on the steering wheel.

The motorhome is also heavier than an automobile and has a higher center of gravity. These factors affect the reaction time of the motorhome. Swerves and sharp turns, especially performed at high speeds, could result in loss of control of the motorhome. Keep the size of the motorhome in mind and drive with extra caution to avoid situations which might require quick momentum changes. Increase reaction time by paying attention to traffic and road conditions 12 to 15 seconds ahead of the motorhome's position.

The motorhome will travel safely and comfortably at highway speed limits. However, it takes more time to reach highway speed. When passing another vehicle, allow extra time and space to complete the pass due to the added length of the motorhome. When descending a long hill, manually shift to a lower gear and begin the descent at a slow speed. Do not allow the motorhome to gain momentum before trying to slow down. Use the engine brake, in conjunction with the service brakes, to help maintain a safe slow speed of descent. The transmission and engine will help control downhill speed and can extend the service life of the brake lining. The distance required to stop the motorhome is greater than an automobile. Practice stopping away from traffic to get the "feel" of distance required to stop the motorhome.

Check tonnage limits of bridges before crossing to ensure they can support the weight of the motorhome. Signs should be posted at bridge entrances. Check the posted height of all overpasses or situations where overhead clearance is limited. Keep in mind that road surfaces may be repaved or packed with snow; therefore, the actual posted clearance height would not apply in such conditions.

Driving Cautions:

- Avoid getting too close to the edge of the road. A soft shoulder may not support the weight of the motorhome.
- Side spacing is best maintained by keeping the motorhome centered in the driving lane.
- Driving lanes in work zones can be uneven, congested and narrower than usual.
- Be cautious of road debris which can damage the undercarriage of the motorhome or become lodged in the dual tires causing damage to the tires, wheel rims or tow car.
- Keep in consideration that posted speed signs are passenger automobile rated. Therefore, an extra awareness of the driving conditions and appropriate speed for a motorhome are necessary, especially on corners and mountain roads.
- Downgrade speed should be at least 5 mph less than upgrade speed, or downgrade speed should be attainable within three seconds of a brake application.
- Use a four second rule when following other vehicles at speeds under 40 mph. Use a five second rule when following at speeds over 40 mph.

Right Turns:

Negotiating a right hand turn in a motorhome can be difficult. Many drivers fear they cannot make the turn without entering into the other lane or jumping the curb. Here are a few tips to make a right hand turn easier:

- As the turn approaches, look into the mirror to ensure the lane to the left is clear, then move wide over to the left.
- When making the right turn, the left rear wheel should touch the center line of the road and your hips should be parallel to the roadside curb of the corner being turned. This will aid in avoiding a premature turn.
- Make the turn slowly.
- Check mirrors frequently. Stay aware of necessary clearance and space management of the motorhome while negotiating the turn.

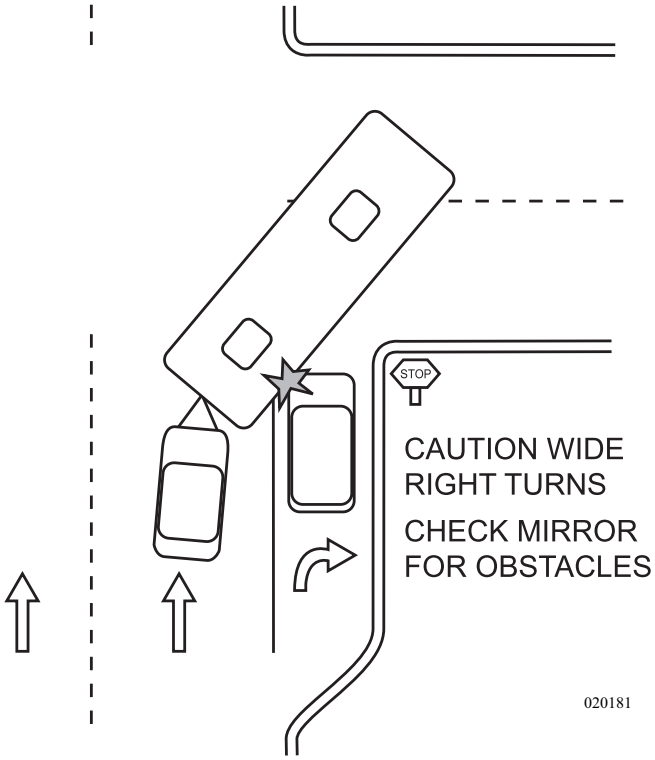

Left Turns:

- Do not start the turn until the center of the intersection is reached with your hips. If there are two lanes available, take the right hand lane. A car or driver on the left hand side is easier seen.

Ascending a Grade:

When approaching an uphill grade, assess the grade and length before beginning the climb. Prepare early for long climbs. Unlike gasoline engines, diesels do not necessarily produce more power by pressing further on the accelerator! A gasoline engine will happily work at full throttle (at least for a short period of time), but a diesel usually just wastes fuel at full throttle. The power output from a diesel engine is dependent upon the following:

- **RPM -** Every engine has a range of RPM that produces power most efficiently.
- **Fuel/Air mixture -** At a given RPM, the engine, even with the help of a turbo-charger, can only "pump" a given volume of air into the combustion chamber. This volume of air can efficiently combine with only so much fuel; so it follows logically that feeding more fuel to the fire will simply waste fuel.

Determine ranges where the motorhome works best by driving long grades when temperatures remain stable for the duration of the climb.

IMPORTANT SAFETY TIP:

Turn on the four way flashers if road speed degrades to the point where the motorhome is moving significantly under the posted speed. Use pullouts if traffic is building. Once in a pullout, if there is sufficient clearance for safety, idle the engine for a while to allow the exhaust and the turbo to cool. While these are cooling, the transmission will also cool. Monitor the gauges while waiting.

Descending a Grade:

Prepare to descend a grade at the crest of the hill. Observe any signs indicating grade angle and duration. The sign may suggest maximum downhill speed according to Gross Combined Weight (the combined weight of the motorhome and a trailer/tow car). At the crest of the hill, manually shift the transmission into a lower gear. Do not allow the motorhome to gain momentum before slowing down.

downhill

Use the engine brake (Jacobs Brake) to help maintain a slow, safe downhill speed. Located on the Driver Side console is an Engine Brake switch and a brake **Hi/Low** switch. When the engine brake switch is on, the engine brake will activate when the throttle is released. The brake **Hi/Low** switch sets the amount of engine braking force. When set to Hi, the engine brake will use all six cylinders. When set to Lo, only three cylinders are used.

With engine brake applied, road speed may increase until the transmission automatically shifts to the next higher gear. Apply the brakes using moderately heavy pressure on the brake pedal to reduce speed and manually downshift to maintain a safe slow speed. Do not "pump" the brakes as this can result in a loss of air pressure. Avoid "riding" the brakes as this can cause the brakes to overheat. Either method can result in loss of brake effectiveness or brake failure.

Night Driving:

- As always be well rested and alert when driving. If necessary, find a safe stopping place to rest until ready to continue.
- Avoid using interior lights while driving that can create a glare on the windshield and decrease visibility.
- Dim dash lights to a comfortable level to reduce the level of glare.

Extreme Heat and Hot Weather Conditions:

- Frequently observe all gauges. Variations from normal conditions should be promptly evaluated.
- Check tire pressure before traveling in hot conditions. Tire air pressure increases with heat. Do not let air out of a hot tire. When the tires cool down they will return to the correct/previous tire pressure.
- Pay extra attention to hoses and belts that are more susceptible to fatigue in extreme heat.

Winter and Cold Climate Conditions:

- The motorhome should be prepared for Cold Weather Use.
- Keep speeds slow and steady. Make moves gradually and increase visual distance for a gain in reaction time.
- If road or weather conditions are treacherous find a safe stopping place and wait for conditions to improve.
- Avoid using an engine braking device on wet or slippery surfaces, which can cause the drive wheels to skid.
- Wiper blades should be in good condition. Fill the washer reservoir with antifreeze formula window washer fluid.
- Use mirror heat to keep mirrors clear.
- Remove any ice build-up from the entry step to avoid accidental slipping.

Wet Conditions:

- Worn or improperly inflated tires can increase the risk of hydroplaning.
- Heavy rain or deep standing water can cause brakes to apply unevenly or grab.

Fuel Economy:

Driving style, wind resistance, terrain, vehicle weight, and engine-driven accessories are some of the factors that affect the fuel economy.

Guidelines to Help Increase Fuel Efficiency:

- When starting out, apply the throttle lightly and accelerate gradually. Avoid using excessive throttle and accelerating quickly.
- Check the tire pressure. A low tire is not only a safety hazard, but also increases rolling resistance to increase fuel consumption.
- While operating the motorhome, keep the engine at a low to mid operating range of 1100 to 1500 RPM. This will use less fuel than operating at higher RPM.
- Avoid using full throttle when ascending a long hill. This wastes fuel and increases engine operating temperature from incomplete combustion. Manually shift to a lower gear and use less throttle. Fuel will burn more efficiently.
- Avoid extended idling to "warm-up" the engine. Start the engine and wait for normal oil pressure to register. Engage the high idle feature until the engine coolant temperature gauge raises. The engine is now ready for travel. Whenever coolant temperature is below 160° F (idling engine) incomplete combustion occurs, causing carbon build-up and raw fuel to wash lubricating oil from the cylinder walls and dilute the crankcase oil.
- Excessive idling (more than 10 or 15 minutes) can clog fuel injectors, eventually causing piston rings and valves to stick.
- Operate the transmission with the **MODE** function set to **Economy** whenever possible; this allows for earlier shifts and enhanced fuel economy.
- Follow the maintenance schedule for the engine.

Refueling:

- Truck stops are good refueling points for motorhomes.
- Check overhead clearance heights before pulling through the fuel island.
- Be aware of concrete/steel posts installed around fuel islands.
- Avoid running over the fuel hose as it can get hung up on the motorhome, causing body damage.
- Use of gloves is recommended for refueling. Store gloves in the outside compartment.
- To prevent grease and fuel deposits from being tracked into the motorhome when refueling, change shoes before entering. Store the extra pair of shoes near the entry door.

WARNING:

Ensure all flames are extinguished and the primary LP-Gas valve is off before refueling to avoid the risk of fire or explosion. LP-Gas and gasoline are highly flammable and can ignite, resulting in an explosion, fire or death.

COLLISION WARNING SYSTEM (Optional)

The following information and instructions will briefly cover components, features and operations of the Eaton Vorad Collision Warning System, a sophisticated computerized component that monitors road conditions in front and to the side of the motorhome. The Eaton Vorad system operates in darkness, fog, snow, rain, dust and smoke. This system is designed as a driving aid and is not a substitute for safe driving practices.

CWS Components

The antenna assembly transmits and receives low power, high-frequency radar signals for analysis. The antenna can detect moving objects up to 350 ft. and stationary objects up to 220 ft., while monitoring up to 20 vehicles at a time.

Side sensors are located at or near the blind spot areas. The side sensor display utilizes two indicator lights to monitor objects within those perimeters. Side sensor displays are typically mounted on the pillar, within the same line of sight as the side view mirror. The ambient light display measures surrounding light to adjust brightness of the indicators for maximum visibility.

The Central Processing Unit (CPU) processes all information from the antenna assembly, side sensors, internal sensor, speedometer, brake circuit, turn signals and the motorhome data base to communicate key information via the indicator lights on the driver display unit. The CPU stores an optional Vehicle Information Management System of recorded data that can be downloaded for record of trip events. The CPU is also capable of storing digital information similar to the 'black box' used on aircraft.

INFORMATION:
Refer to the manufacturer's manual for more detail on the CWS components and their operation.

Driver Display Unit

The driver display unit is typically mounted in or on the dashboard within reach of the motorhome operator.

When the ignition is turned on, all indicators light up for five seconds. The green **ON** indicator remains active following the initial system check. The Eaton Vorad System tracks speed and location of up to 20 vehicles, using the most potentially dangerous vehicle as the basis for alert by factoring distance, speed, and relative angle. A series of audible and visual alerts are available within the system.

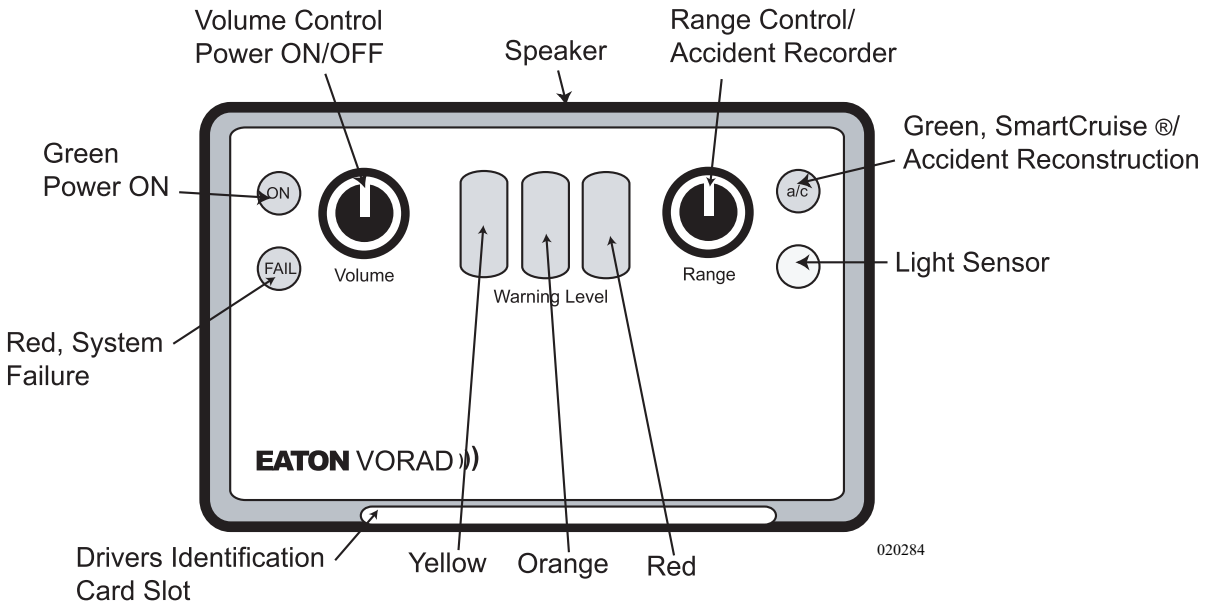

Indicator Lamps:

A danger alert comprising illumination of the three lights, along with an audible alarm, is designed to warn the operator of a potentially hazardous obstacle ahead of the moving motorhome. The danger alert is also activated when the system detects a moving vehicle ahead that is moving 20% slower than the speed of the motorhome.

- The **yellow** light illuminates when an object is detected within 350 feet ahead of the motorhome, and remains on as long as the object is within that perimeter.
- The **yellow** and **orange** lights illuminate when the vehicle detected ahead is within range that the motorhome will travel in three seconds. A warning tone will sound at two seconds. Vehicles moving in range at a faster rate of speed will not cause the warning tone to sound.
- The **red**, **yellow** and **orange** lights will illuminate, along with an audible warning, when the vehicle ahead is within range that the motorhome will enter in one second.
- A repeated alarm will sound, regardless of motorhome speed, when the motorhome and potential hazard are within one-half second of collision.

Smart Cruise®

Smart Cruise® activates when the motorhome cruise control system is engaged and the Eaton Vorad System is on. When Smart Cruise® is active, the S/C light in the upper right corner of the Driver Display will illuminate. A Range Control Knob is utilized to adjust Following Intervals. The system will either maintain the selected Following Interval between the motorhome and the vehicle ahead of the motorhome, or in the case of no vehicle ahead, the preset cruise control speed. Following Interval takes priority over the preset cruise control speed. Smart Cruise® will adjust or reduce speed when overtaking a vehicle within Following Interval range, adjusted by using the Control Knob located on the Driver Display. The system is also capable of engaging the engine brake.

WARNING:
Smart Cruise® is not a substitute for an alert driver. Smart Cruise® will not react to stationary objects and cannot apply the service brakes to bring the motorhome to a complete stop. The driver needs to use good driving practices and remain in control of the motorhome at all times to avoid accidents.

WARNING:
If the motorhome speed and speed of the vehicles ahead significantly differ, the driver will need to apply the service brakes to maintain a safe distance. As with the cruise control, Smart Cruise® must be reset after application of the brakes.

WARNING:
The Eaton Vorad Collision Warning System/Smart Cruise® is not a substitute for an alert, safe driver. The driver is ultimately responsible for the safe operation of the motorhome. The driver should fully understand the operating characteristics and limitations of the Smart Cruise® and take all necessary actions to operate the motorhome in a safe manner.

Proximity Alert:
The proximity alert is activated when the motorhome is moving up to two miles per hour and an object is detected less than 15 feet in front of the motorhome. In this case, the yellow light comes on, accompanied by a low-pitch tone.

Side Sensors

The side sensor display includes two lights (top and bottom) and a light sensor (middle), located on the A-Pillars:

- **Yellow** light indicates no obstacle detected by the side sensor.
- **Red** light illuminates when the side senor detects an obstacle. When the red light is on and the turn signal is activated, the system will sound a high-pitched audible alarm. The alarm will sound only once during turn signal activation. The red light illuminates continuously to signify system failure.

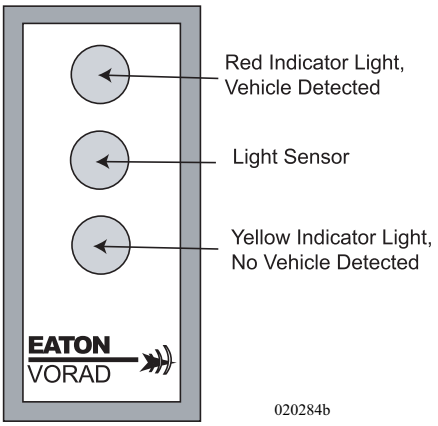

Interpretation of curves, dips and hills can influence the Eaton Vorad CWS system alerts. The following road situations may help you to better understand how to safely and effectively use the Collision Warning system.

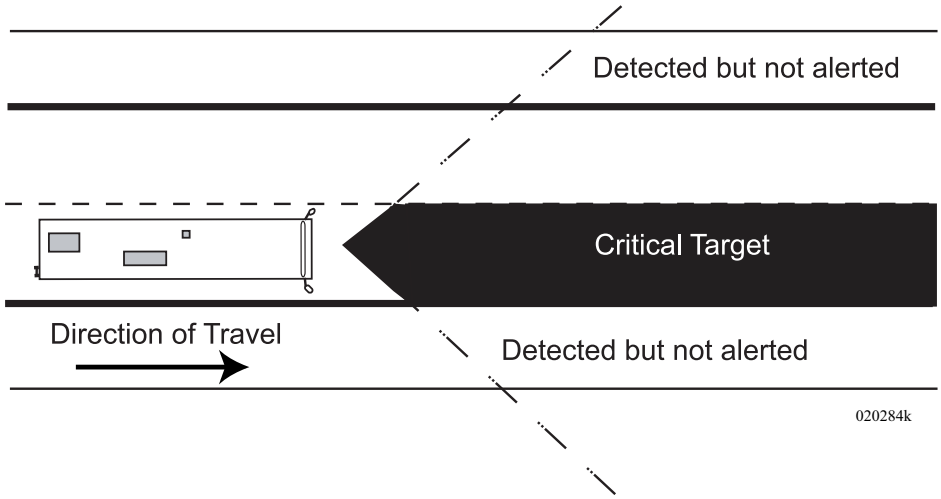

When the motorhome is in the midst of a sharp turn, the system will not provide audible alerts for objects in front. Due to the likelihood of nuisance alerts from traffic, only visual alerts will occur. Gradual turns, such as lane changes, negotiating cloverleaves, or on/off ramp travel, generally do not effect system alerts.

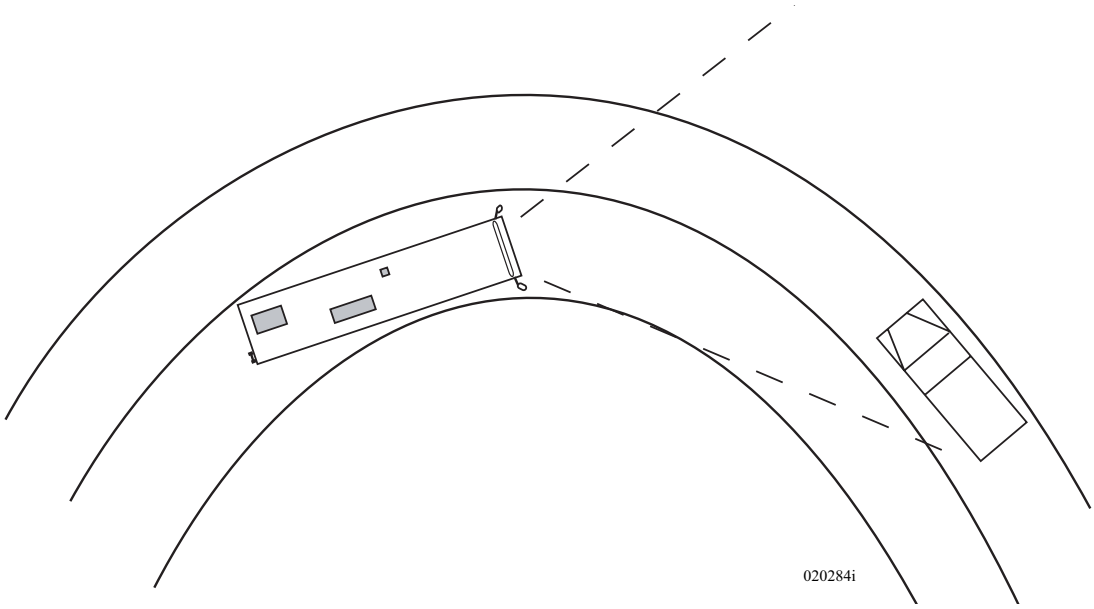

When approaching a curve, alerts may sound and illuminate if there is an object on the side of a curved portion of the road that lies in a direct line with the motorhome prior to entering the curve.

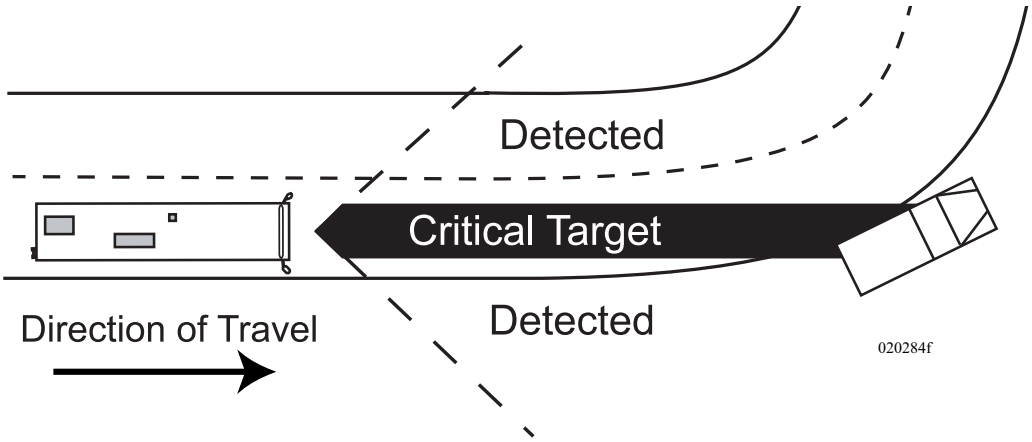

Unusual road elevation angles may cause the CWS to detect overhead signs or overpasses that are in line with the motorhome. In some situations, a bridge abutment may set off an alert even though the road ahead is actually clear.

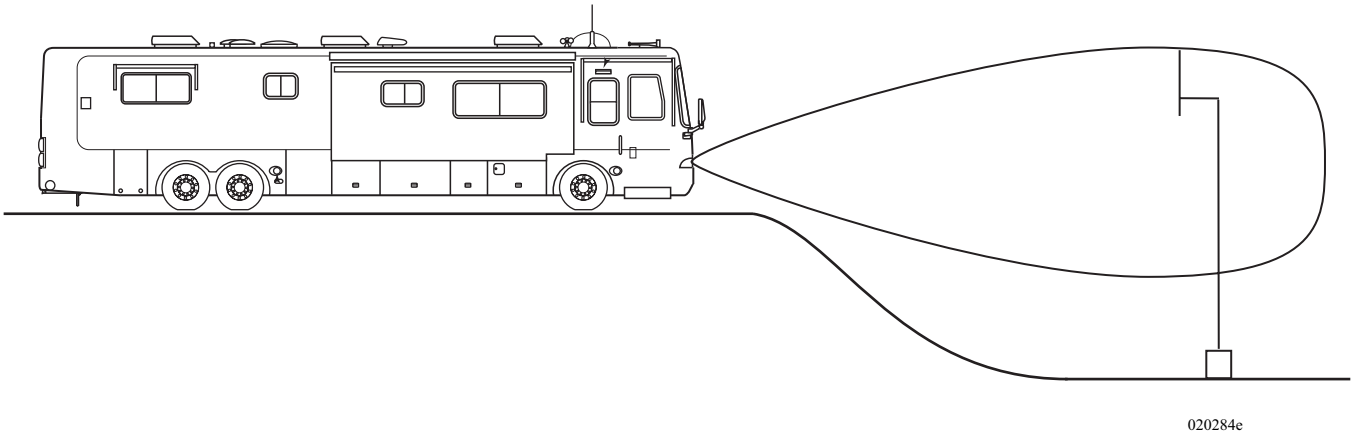

The antenna assembly cannot detect objects over a hill. Alerts will not sound until objects are within field of vision.

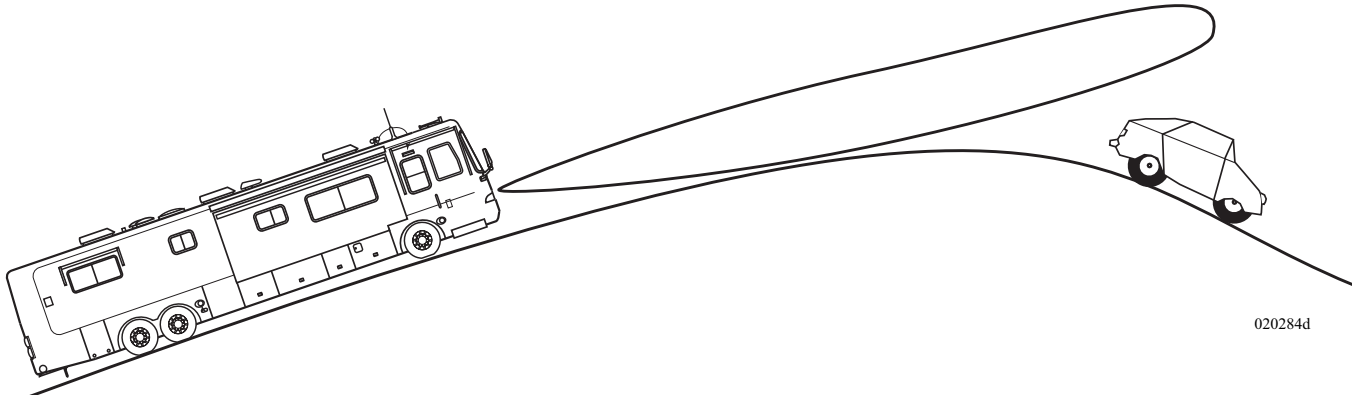

The antenna assembly cannot detect objects above its beam, causing vehicles ascending a hill to go undetected. Generally, the alarm will not sound from deflecting the road surface.

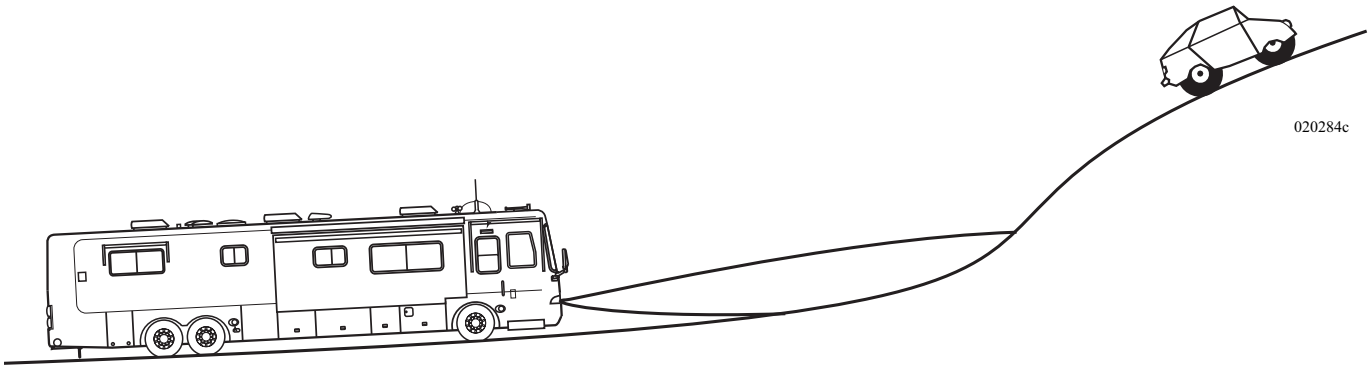

The side sensor can only detect objects within range, generally as far as the adjoining lane of travel. Stationary objects that maintain continuous presence to range, such as guard rails or construction walls, may cause the **red** sensor display indictor to illuminate.

The Eaton Vorad side sensor can detect heavy rain, splash and spray conditions that may interfere with side sensor operation causing both LEDs to illuminate until weather conditions improve.

The Eaton Vorad System cannot provide additional warning for situations including, but not limited to, pedestrians or animals darting into the path of the motorhome, head-on collisions involving oncoming vehicles, and intersection cross-traffic. This system is not a substitute for safe driving practices.

Data Recorder

Eaton Vorad CWS may be equipped with an optional feature that retains system data surrounding a particular incident including motorhome data as well as information regarding vehicles within range. Current data is automatically saved until the motorhome is driven, and then replaced with new data. To save specific information, push and hold the Range Knob on the Driver Display Unit for five seconds until the green Smart Cruise® lamp begins to flash. The CPU will then store the last several minutes of vehicle information. **The data recorder information can only be retrieved by Eaton Corporation.**

WARNING:
The Eaton Vorad System is a tool to enhance, not substitute for safe driving practices.
The driver is ultimately responsible for safe operation of the motorhome.

PRE-TRIP PREPARATIONS - CHECKLIST

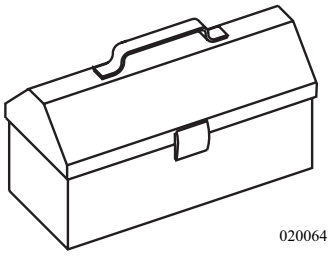

Prior to departure on a trip, several items will need to be prepared. Suggestions are listed below to use as a general guideline when preparing to depart.

INFORMATION:
For chassis maintenance details, please refer to the chassis section.

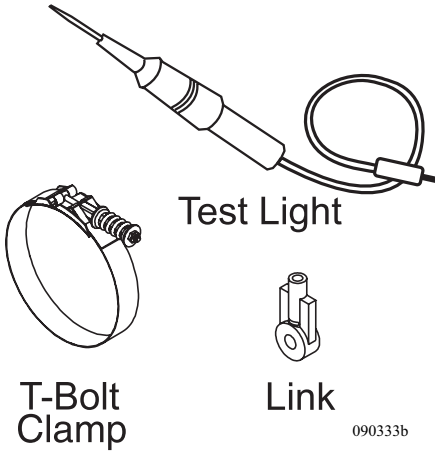

Items To Carry:

- Local, State and National Maps. A "Motor Carrier" road atlas can be useful for showing maps, refueling stations and truck repair facilities.
- Emergency road kit containing a flashlight, road flares, warning signs and a fire extinguisher.
- Potable/non-potable water hoses and a water pressure regulator.
- Assortment of termination connectors for sewage.
- Hand tools.
- 12 Volt DC test light and a 120 Volt AC Polarity Tester. (These may be helpful when on the phone with a technician.)
- Battery hydrometer.
- Spare 12 Volt DC continuous duty solenoid (if applicable).
- An assortment of spare fuses.
- One link kit for ride height control assembly (for air suspension only).
- Spare alternator belt.
- Charge air cooler T-bolt clamp.

Interior Items:

- Start refrigerator operation the night before departure to get a head start on the cooling process. Pre-cool items prior to loading them in the refrigerator.
- Load pots, pans, utensils, soap, linens, etc.
- Secure and fasten bi-fold and pocket doors. Lock the shower door.
- Close roof vents and windows.
- Secure loose, heavy or sharp objects in case of a sudden stop.
- Close all cabinet doors and drawers.
- Walk the interior and check for items not secured.
- Test appliances before leaving home.
- Turn interior lighting off.

Exterior Items:

- Check operation of all exterior lights, headlamps, taillights, brake and clearance lights.
- Check the battery fluid level of Liquid Lead Acid batteries.
- Check all fluid levels on the chassis and generator. (See **Chassis Information** section and the OEM generator manual for details.)
- Check the fuel/water separator in the engine compartment. Clean and drain if needed.
- Adjust mirrors.
- Test the windshield wipers.
- Fill the LP-Gas tank.
- Test the generator.
- Ensure the following items are in the motorhome: sewer connection hose, water fill hose, awning rod and electrical adapters.

Engine Checklist:

- **Inspect** the engine, transmission and engine compartment for fluid leaks.
- Inspect the area under the motorhome for fluid leaks or puddles.
- Check all fluid levels, oil, antifreeze, transmission, hydraulic fluid and washer fluid.
- Inspect belts and hoses for wear.
- Inspect wiring for loose, frayed or corroded connections.
- Start engine and listen for unusual noises.

Driving Preparations:

- **Inspect** oil level of tag axle oil bath hubs.
- Fill the water tank and confirm waste tanks are empty. Test the water pump.
- Disconnect and store the fresh water hose.
- Check all tires for accurate pressure. Inspect tires for cuts, punctures, weather damage or cracks in the sidewalls and tread areas.
- Check for foreign objects lodged between dual tires.
- Ensure all lug nuts are tight. This should be done by an approved repair facility.
- If applicable, program the navigation system.
- Secure all awning locks.
- Secure items in storage bays to prevent shifting or damage to items.
- Outside compartment doors should be closed and locked.
- Look around, above and under the motorhome for obstruction.
- Check fuel level gauge. Fill the fuel tank if necessary.
- Check all other dash gauges for operation and correct level indications.
- Secure and lock the entry door for travel.
- Lower the antenna.

Storing Cargo:

Exercise caution when opening storage bays as cargo may shift during travel. When closing the bay doors, keep fingers clear of openings.

CAUTION:
Open the cargo door slowly as cargo may shift forward during travel.

WARNING:
To avoid injury, never place hands or fingers near the edges of the bay door when opening or closing. Always use the latch handle. Apply pressure with the other hand just above the latch handle.

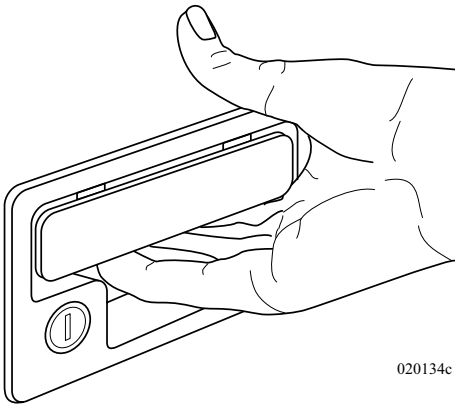

Regardless of how large the motorhome there is a limit to storage capacity. Pack as lightly as possible to allow for additional storage during the trip. It is often easier to purchase needed items at the final destination rather than discarding items to make room for additional cargo.

When packing the motorhome keep two things in mind: turning and braking. For the motorhome to handle well, the load will need to be evenly distributed side-to-side and front-to-back. Additionally, heavy items should be stored as low as possible to keep the motorhome from becoming top heavy. Make sure that everything is secure and safe from quick turns, bumps and sudden stops.

Guidelines for Loading the Motorhome:

- Distribute the cargo weight evenly from side-to-side and front-to-back. This practice will prevent both handling problems and uneven stress on the components throughout the life of the motorhome.
- Heavy items should be stored near the rear axle; lighter items stored toward the front.
- To maintain a low center of gravity and reduce sway, store light items in the overhead cabinets and heavier items near the floor.
- Secure loose items to prevent weight shifts that could affect the balance of the motorhome.

TIPS:
Multi-purpose items, versatile clothing and periodic removal of unused cargo will streamline cargo storage.

When using the rear hitch receiver, remember that the motorhome is intended for towing light loads and is primarily designed as a recreational vehicle. Safety and durability of the hitch receiver requires proper receiver use. Avoid excessive towing loads or other misuse of the receiver. Towing will affect fuel economy. Weight pushing down on the rear hitch must not exceed 10% of the hitch capacity.

It is recommended to weigh the motorhome when fully loaded to ensure proper weight distribution of the GCVW (Gross Combined Vehicle Weight). When weighing the motorhome add all passenger weight to the GCVW total. The motorhome fully loaded, including fresh water, LP-Gas and any vehicle or trailer towed, must not exceed the GCWR (Gross Combined Weight Rating).

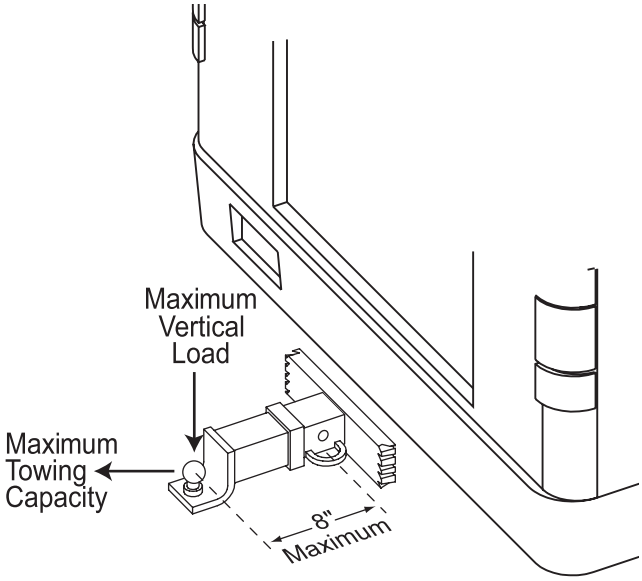

020065d

WARNING:
Most states and Canadian provinces require trailers and/or towed vehicles to have adequate auxiliary brakes. Failure to comply with these State and Canadian province requirements may result in fines and/or pose a safety hazard, which may result in an accident.

WARNING:
Do not tow a trailer or vehicle that exceeds the rated capacity of the hitch receiver. Overloading the hitch receiver can cause unusual handling characteristics and over-stress the hitch receiver and chassis. It could also void the warranty. If there are any questions, call a factory technician.

MONACO
COACH CORPORATION

Coburg, Oregon
Springfield, Oregon
Wakarusa, Indiana
Elkhart, Indiana
Nappanee, Indiana

Do Not Cut, Weld or Modify 03213019

Do Not Exceed Vehicle Ratings

Maximum Towing Capacity 10,000 Lbs.
(4,536 Kg.)
Maximum Vertical Load 1,000 Lbs.
(454 Kg.)

Any Towed Vehicle or Trailer Over 1000 lbs (454 kg)
Should Have Separate Functioning Brake System.

Refer To Owner's Manual For Additional Towing Guidelines

100200

Tow Car or Trailer:

1. Connect a tow car or trailer to the motorhome with safety chains rated for the weight of load.
2. Make the electrical connection and perform a light check before starting a trip and at each rest stop.
3. Check the tires frequently. Flat tires on a towed vehicle cannot be detected from the motorhome while driving. A flat tire is a safety hazard and may cause extensive damage.

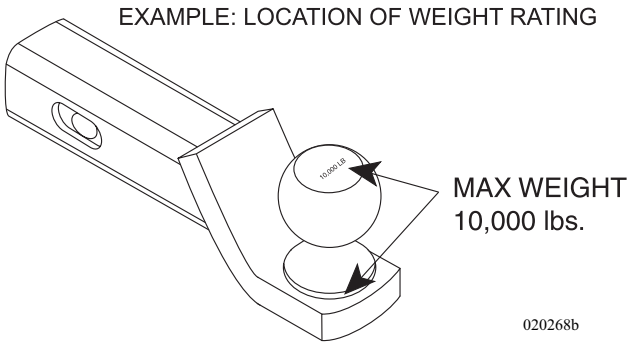

WARNING:
Be sure the weight ratings of the ball mount, tow ball and safety chains are equal to or greater than the load. The use of an extension to the receiver or extended ball mount will significantly reduce hitch receiver weight ratings. Modifications to the hitch receiver, or use of the hitch receiver other than intended, can void the warranty of the hitch receiver, chassis or both.

Tow Plug Connection

The motorhome is pre-wired from the factory with an electrical connection for towing, located on or near the hitch receiver. Convoluted tubing protects the tow harness wires. Current draw should not exceed ten amps for each designated light circuit. Within the electrical connection is a positive terminal for use when towing a trailer equipped with a battery. The positive terminal maintains the charge of the trailer battery.

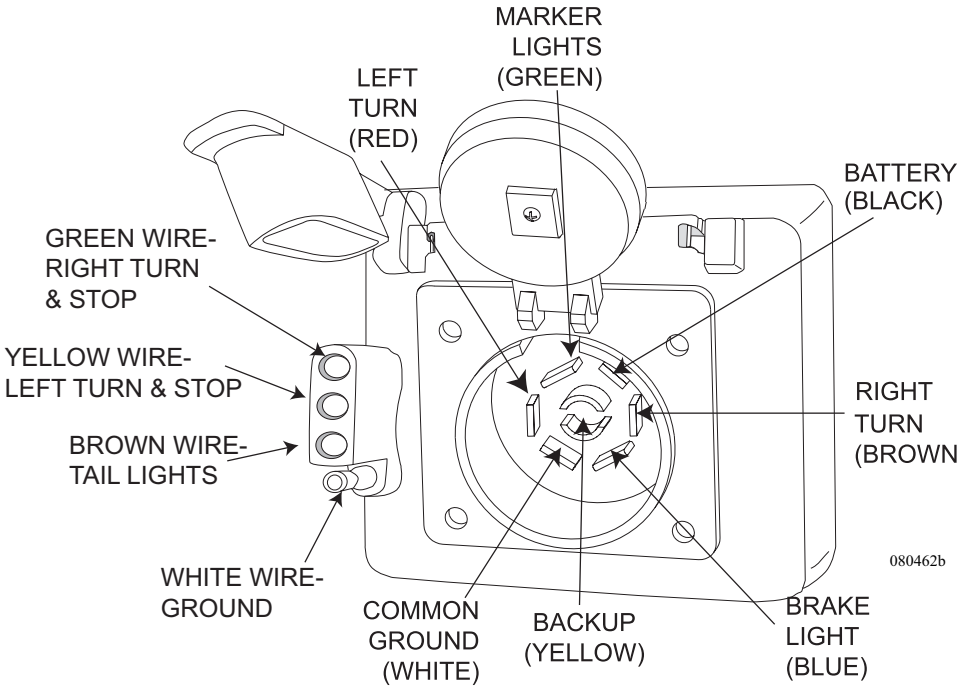

When preparing a tow plug connection strip the wires 3/8". Twist the wire strands and place under the clip and secure the screw. Make sure there are no loose strands of wire that could short against the case or other terminals. Do not accidentally mirror image the trailer connection.

CAUTION:
Positive terminal connection of the tow plug remains live at all times. When towing a trailer equipped with a battery, unplug the electrical tow connection when parked. Failure to unplug the tow connection may result in discharged chassis batteries.

Towing Air Brake Port (Non ABS)

The motorhome is designed as a recreational vehicle capable of towing light loads. Towing of any load will have an impact on fuel economy. Some States and Provinces designate special speed limits and required braking systems to be used while towing a vehicle. Understand the laws of each State and Province in which you travel.

To conserve the integrity of the motorhome brake system, while at the same time allowing the operator the opportunity to add individual braking systems that may be required in a particular region of travel, a non-ABS service air (brakes only) port has been installed on a bracket near the trailer electrical plug on the hitch. This fitting supplies air when the motorhome brakes are applied, and only in an amount relative to brake application. No storage tank or air line is supplied to charge or maintain a storage tank for the towed vehicle.

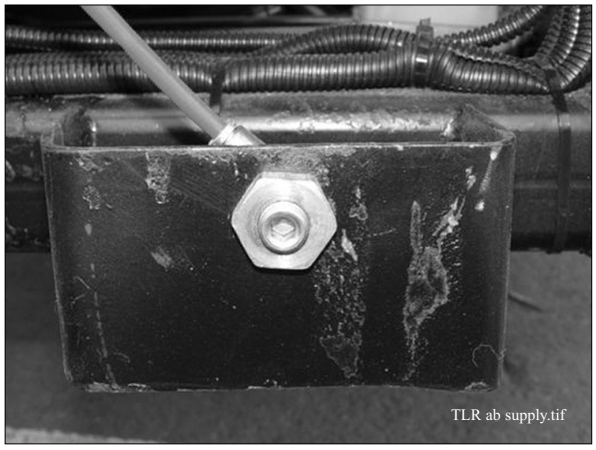

Air brake supply for towed vehicle.

WARNING:
There is no storage tank or air line supplied to charge or maintain a storage tank for the towed vehicle.

CAUTION:
Some States and Provinces have special speed limits for vehicles when towing and/or may require an air brake system for the towed vehicle. Failure to comply with State and/or Province requirements and laws can result in fines or pose a safety hazard.

CAUTION:
Many different manufacturers and types of towing and braking systems are available. Installation of any such device should be referred to that manufacturer or their representative. The motorhome manufacturer does not endorse or recommend any towing system or supplemental braking device.

BACKING UP A MOTORHOME

Whether you are a long time owner of recreational vehicles, or just starting out, backing up can be a challenge. Following some simple guidelines may help to reduce that challenge. When backing up, the driver (pilot) should be comfortable using the mirrors, the back-up camera and the co-pilot's directions (ground guide) for assistance. Practice first, backing up with the co-pilot's guidance, in a large unobstructed parking lot. Backing up is a team effort.

The backing process should begin while the motorhome is in forward motion. Maneuver the motorhome to align with the chosen site. Aligning the motorhome with the site after the backing process begins may require more than one attempt. When the motorhome is properly aligned with the site, the parking area will be visible in both mirrors. Use road markings as reference points, when possible.

When "pull-through" sites are not available, pick a solid, level site on the left side for a better field of vision using the roadside mirror. If the site is on the right, use the curbside mirror for backing up, but stay aware of blind spots. Prior to backing in a site, get out and walk the area. Look for potential hazards or obstacles that may damage the motorhome. If the site is satisfactory, prepare to back in carefully. Have the co-pilot provide guidance using the five hand signals. Use of walkie-talkies will also aid in guidance.

The co-pilot will perform just as important a job as the driver. When guiding the driver, the co-pilot should be located safely at the left rear corner of the motorhome, facing forward, while remaining visible in the roadside mirror at all times. The co-pilot should make a conscious effort to maintain sight of the driver through the roadside mirror as the the motorhome maneuvers. If the driver loses sight of the co-pilot, stop the backing up process until the co-pilot returns to view. To avoid mishaps, the co-pilot should be focused only on what the driver is doing, with brief observation moments. If necessary, stop the backing up process to have co-pilot inspect other areas or angles of concern.

The driver should receive directions only from the co-pilot. When the co-pilot is guiding the driver, only five clearly defined signals should be used, with only one signal given at a time. Flailing arms with indecisive signals only confuse the driver. Signals should be given with purpose and confidence. Directional signals are directing travel of the rear of the motorhome.

If the desired direction is left, the co-pilot points left. For example: The co-pilot will use his/her right arm and forefinger pointing distinctly left with arm and finger held on a horizontal plane, indicating desired direction of travel of the rear of the motorhome. The directional signal given should remain steady until the desired movement is complete.

Five Directional Signals:

1. Co-pilot uses left hand and arm held horizontal, with forefinger pointing right, to direct rear of motorhome to the right.
2. Co-pilot uses right hand and arm held horizontal, with forefinger pointing left, to direct rear of motorhome to the left.
3. Co-pilot uses both arms and hands parallel with thumbs pointing up and to rear in a waving vertical motion. This signals driver to maintain a straight back direction.
4. Co-pilot holds arms horizontally, hands open with palms facing one another. Start with a wide separation, gradually closing distance of hands, in a rate appropriate to vehicle speed, to indicate amount of distance to the stop point.
5. Closed fists and crossed arms indicate STOP.

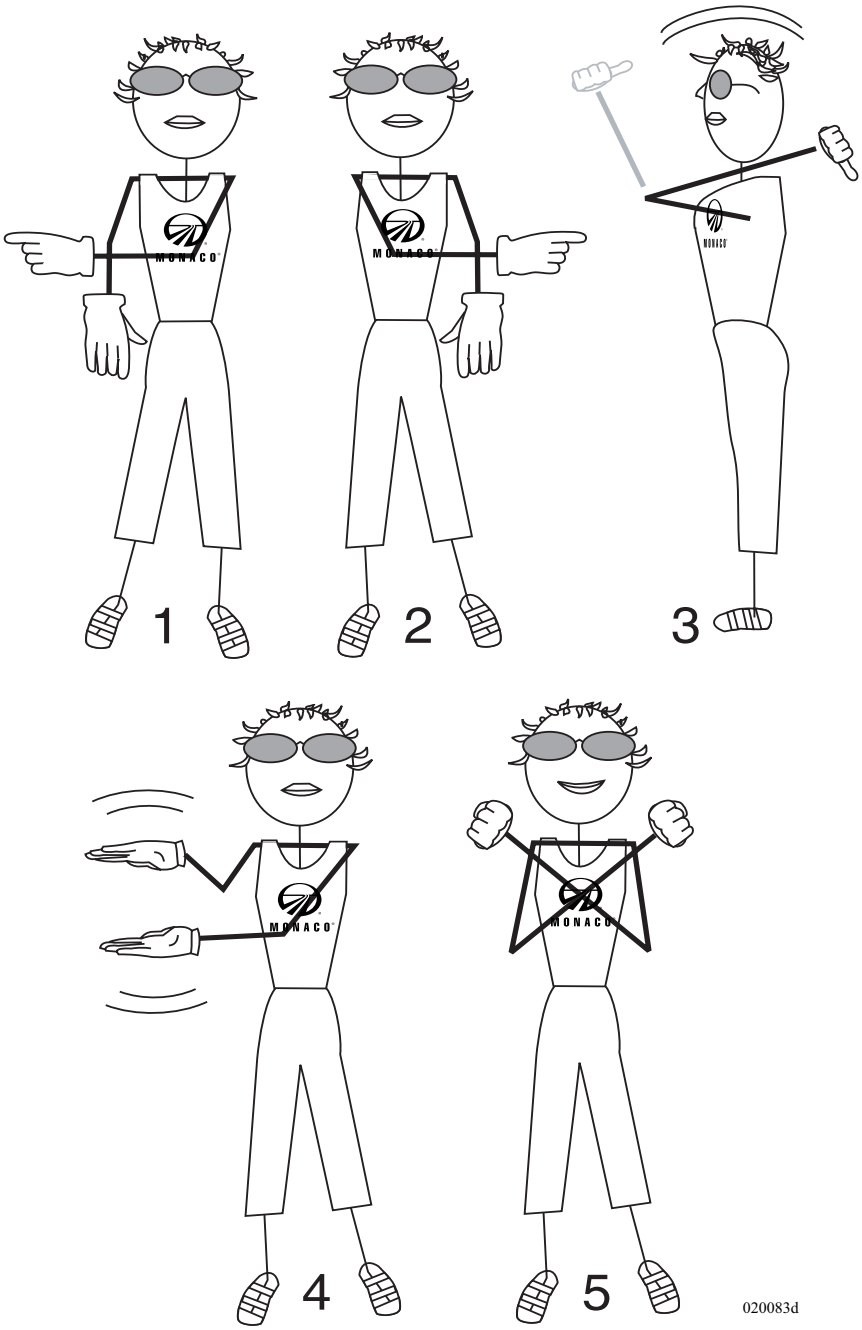

Backing Up Trailers:

Towed vehicles using a tow bar or tow dolly have more than one pivot point and are not suitable for backing. Attempting to back up the motorhome while connected to a tow bar or tow dolly can jack-knife the tow device causing the wheels of the towed vehicle to move in a forward "sideways" motion that will cause irreparable and expensive damage. If necessary, disconnect the tow vehicle to avoid a backing up situation.

Trailers have one pivot point and may be backed up. The same rules for backing a motorhome can be applied to backing a trailer. When preparing to back the trailer into a space, maneuver the motorhome sweeping wide. Turn back to the opposite direction to maneuver the trailer into the space. Keep the bottom of the steering wheel in the desired direction of travel for the trailer. For example: If the desired direction of the trailer is left, rotate the bottom of the steering wheel left.

If the trailer moves in an undesired direction, use a short "pull-up" method, pulling forward just far enough to align the trailer with the space. The co-pilot should stand safely at the left rear corner of the trailer within view of the driver in the roadside mirror, using the five hand signals for guidance.

CAUTION:
Tow bars or car dollies are generally made to travel in a forward direction only. Most towing equipment of this type is not designed for backing. Never attempt short back up distances with a tow bar or tow dolly. Damage to the motorhome, vehicle or towing device will result.

SET-UP PROCEDURE CHECKLIST

If the site for the motorhome provides full hook-ups, use this quick reference checklist as a guide only. The checklist contains information on hooking up the utilities and preparing appliances for use. Specific information on slide room, awning and leveling system operations is discussed in detail in other sections.

CAUTION:
Check for lateral clearance before extending the slide-out room.

NOTE:
To operate any slide room, turn the ignition switch to OFF, and set the park brake.

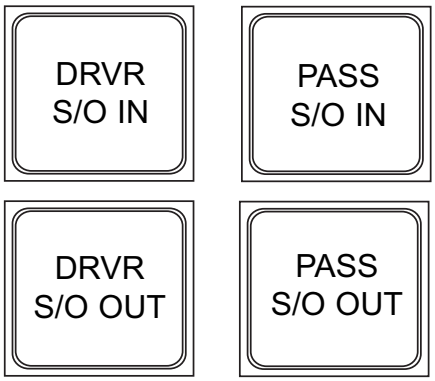

060260c

- Follow the procedures and guidelines for *"Leveling the Motorhome"* in **Section 10**. If the motorhome is equipped with hydraulic jacks, confirm that the parking surface will accommodate the weight placed on the jacks.

CAUTION:
Before leveling the motorhome survey the area around and under the motorhome for obstructions which can damage the motorhome or undercarriage components when the air bags are deflated.

CAUTION:
Hot asphalt, gravel or dirt may not support the weight that is placed on the hydraulic jack pads. Place thick plywood under the jack pads to help disperse the weight. If blocking up a rear jack pad to gain added clearance when the motorhome is on a slope, place a wheel chock at the opposite set of rear wheels to prevent the motorhome from rolling.

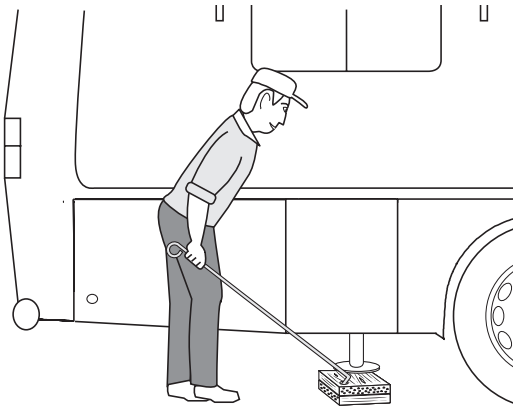

- Open the LP-Gas tank primary valve.
- Prepare the shore cord for connection. Uncoil and inspect the cord, and perform necessary cord maintenance. Install proper electrical adapters if anything other than 50 Amp service is provided. Operate electrical appliances in sequence when hooked to limited shore power service. Turn shore power circuit breaker OFF prior to plugging in the shore cord.
- If possible, begin appliance operation on LP-Gas for the first 60 minutes. Switch the refrigerator operation to gas and start the Aqua-Hot (if needed). This allows time for the inverter to stabilize battery charging.

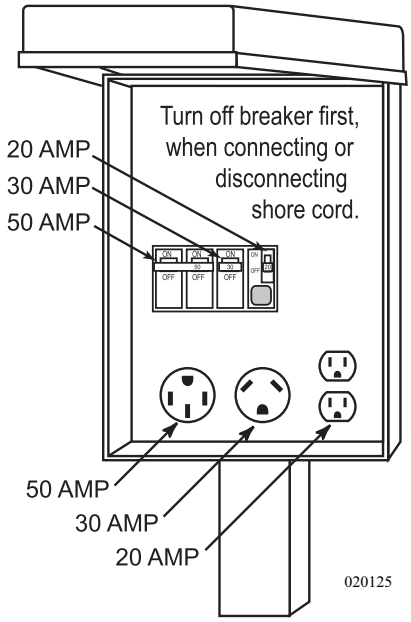

Typical Power Pedestal

CAUTION:
If shore power service is limited to 15 or 20 Amps, use of light duty extension cords and electrical adapters will create a voltage loss through the cord and at each electrical connection. Line voltage loss and the resistance at each electrical connection can be a hazardous combination. Damage to sensitive electronic equipment may result!

CAUTION:
Do not remove cover from the shore power supply to troubleshoot electricity to the motorhome. Serious personal injury or death may occur. If there is no power to the motorhome, inform the park manager. It is the park manager's responsibility to fix any problems with the shore hook-up at the site.

NOTE:
To avoid shore power overload when hooked to 30 Amp service, determine appliances current load prior to turning on appliances or using interior outlets.

- If cable service is provided, hook-up a 75 Ohm RG59 or RG6 cable to the cable connection in the service center. If the motorhome has a video selector box press the appropriate viewing button for the item desired.
- A phone connection port is provided in the service center. Phone utility outlets are placed throughout the motorhome, including a phone line attached to the satellite receiver for Pay-Per-View movies and events.
- Hook the potable water hose to the city water connection in the service center. Install a water pressure regulator to protect the water hose from excess pressure. Turn the hand valve so the pointer indicates "city water."

NOTE:
A water pressure regulator attached between the city water faucet and the potable fresh water hose will protect the hose from swelling or bursting under high city water pressure. Securing the pressure regulator to the hose with pliers will prevent the regulator from being misplaced.

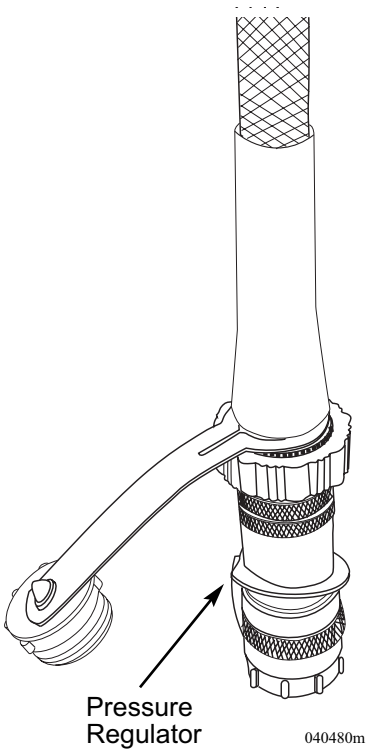

- Hook-up the sewer hose. Sewer drain pipe diameters are generally either three or four inches. Proper sewer hose adapters will ensure against leaks or spillage. With the sewer hose properly connected open the grey water valve (small valve). The black water valve (large valve) remains closed until the tank is full or until time of departure.

DRY CAMPING

Plan ahead and conserve resources while dry camping. Dry camping requires fully charged and properly maintained batteries (corrosion cleaned, terminals tightened, cables checked, etc.). If water levels in liquid lead acid batteries are low, fill the batteries with distilled water only. (Tap Water containing a high concentration of minerals will alter battery chemistry, reducing capacity, performance and longevity.)

Begin with a full fresh water tank. Remember to fill the hot water tank before topping off the fresh water supply. Confirm that waste holding tanks are empty. When water supplies run low, evacuate waste holding tanks prior to refilling the fresh water tank.

Solar panels are a valuable addition for battery charging. The motorhome is equipped with one solar panel to help offset parasitic load. A second panel, or adding up to five panels, will help charge the motorhome batteries during daylight hours. Clean solar panels regularly for optimum performance using window cleaner and a soft cloth.

Confirm that the location you intend to visit can accommodate the size and length of your motorhome. Drive-through sites are preferred for easier positioning of the motorhome and tow vehicle. If only back-in sites are available, disconnect the tow vehicle before entering the campground for easier maneuverability.

Arrive during daylight hours. If arriving late, consider parking in an open area until the following day to avoid negotiating narrow and winding campground roadways during hours of darkness. When driving through the campground, stay aware of low hanging limbs, tree trunks and barriers lining the roadway. Have the co-pilot or campground host provide exterior guidance when negotiating curves and bends. Prior to moving the motorhome into the site space, perform an exterior inspection to gauge positioning for slide rooms and awnings that is free of obstruction.

Take time to properly set up. Before lowering the air suspension and leveling the motorhome, check under the vehicle for obstacles that may damage undercarriage components. When using the automatic leveling system, prevent persons or pets from moving about the interior during the leveling process. When leveling manually, avoiding interior movement is less critical.

Monitor battery voltage. Do not allow batteries to fully discharge before engaging the generator. If possible, run the generator twice a day, morning and afternoon, to charge the batteries at a steady rate. The length of time the generator will need to run will vary on individual electrical requirements. Similar to driving a vehicle - distance dictates amount of fuel. Float indication on the inverter remote panel generally signifies a sufficient amount of charge.

Suggestions for Dry Camping:

- Switch refrigerator operation from Auto to LP-Gas.
- Open windows during the day to reduce use of the roof air conditioner.
- Turn off interior 12 Volt DC power whenever possible. The refrigerator is designed to operate with the power off. Battery charging is unaffected, and the generator will continue to operate the inverter.
- Operate the Aqua-Hot on diesel. To conserve fuel turn the system on about twenty minutes before hot water is needed. Once heated, water will remain hot for several hours. Turn the system off when not in use.
- When interior heat is required during cold weather, set the thermostat temperature a bit lower to prevent the Aqua-Hot system from frequent cycling.
- Turn off small items that use battery power, such as the porch light, bay lights, the light under the step, generator compartment lights, engine compartment lights, etc. If the television is not in use, turn off the 12 Volt booster. Even one light left on, such as under the front cap, can quickly reduce battery reserves.
- Keep flashlights handy to illuminate potential barriers surrounding the campground site.
- Use a flashlight to navigate inside of the motorhome during the night to avoid running interior lights. When interior lighting is desired, use one light in a central location, such as the vanity, unscrewing all but one or two bulbs to reduce battery requirements.
- Turn on the water pump only when using water.

- If it is too early in the morning, or too late in the night, to run the generator, use the inverter for AC power, and turn off the inverter when not in use. When conditions permit, turn on the generator for a couple of hours to help charge the batteries, particularly while preparing meals.
- Frequently monitor water and battery consumption. Routinely check fuel levels, especially during cold weather temperatures.
- Plan what is needed from the refrigerator prior to opening. If weather does not permit eating at the picnic table, or no outdoor table is available, eat at the dinette table by candlelight.
- Careful management of water is critical when dry camping. Learn the motorhome tank capacities. Picture the amount of liquid in a gallon container and visualize that amount each time you use water. When dry camping for extended periods, limit shower usage. Turn water off when soaping down in the shower, and back on to rinse. When water conservation is critical, take a sponge bath. Chances are that a campground without hookups will also lack comfortable shower rooms or bathrooms, and may only be equipped with primitive facilities. However, if it helps to economize on fresh water and holding tank capacity, use them.
- Do not fill the sink full of water to wash only a few dishes. Use disposable dishes when possible.
- Conserve propane and electricity by cooking dinner over the campfire. When using the inverter to operate the microwave/convection oven, conserve battery power by engaging the generator.
- Leave shoes outdoors or at the entry step to avoid tracking in dirt.

Get back to nature and still enjoy the comforts of the motorhome. With a little imagination, the ways to conserve available resources while dry camping are endless.

Typical Current Draw:

- Interior house power draws 1.5 Amps just to have it on.
- A 13" TV has a 1.7 Amp draw.
- Rope lights (10 ft) are a 1.3 Amp draw.
- The porch light is a 2.0 Amp draw.
- One fluorescent dual bulb light has a 2.1 Amp draw.
- One halogen ceiling light has a .09 Amp.

Preparing the motorhome for travel will require several small tasks. Properly securing and storing items will help to prevent them from getting lost or damaged. Below is a checklist guide to reference when preparing to break camp.

Outside Checklist:

- Disconnect the cable TV and lower the satellite dish and/or antenna.
- Disconnect and stow the telephone line.
- Retract awnings and secure them for travel.
- Close the primary LP-Gas tank valve.
- Connect the sewer hose.
- Drain and flush holding tanks. Start by closing the grey water valve. Run enough cold water down the sink and shower drains to fill the grey tank at least 50%. Use caution to avoid overfilling or flooding the grey tank. Connect a non-potable water hose to the "No-Fuss" hose bib, open the black tank valve, and allow adequate time for the black tank to drain. Close the black tank valve and open the grey water valve. Water from the grey tank will help to flush the drain hose. Once evacuated, close the grey water valve. Disconnect the sewer hose and flush that hose with clean water from a **non-potable** hose. Store the hose. Replace the sewer cap.
- Disconnect fresh water hose from the source and store with end cap in place. If applicable, remove the hose protection water pressure regulator from the city water faucet.
- Turn shore power breaker off and disconnect the shore line. Wind up and store the shore cord and secure the door.
- **Inspect** fluid level in oil bath hubs (if applicable) and check all tire pressures.
- Secure all compartment doors.
- **Inspect** tires and wheels.
- Check for fluid leaks under and around the motorhome.

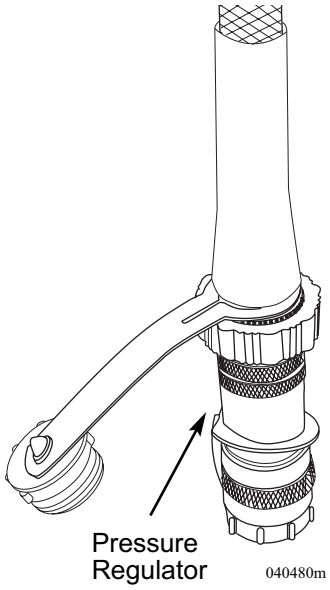

Cap the end of the hose before storage to prevent leakage and keep insects from entering the hose.

Engine Checklist:

- **Inspect** the engine, transmission and the engine compartment for fluid leaks.
- **Inspect** the area under the motorhome for fluid leaks or puddles.
- Check all fluid levels: oil, antifreeze, transmission, hydraulic fluid and washer fluid.
- **Inspect** belts and hoses for wear.
- **Inspect** wiring for loose, frayed or corroded connections.
- Start engine and listen for unusual noises.
- **Inspect** gauges and controls for proper operation.

Interior Checklist:

- If applicable, retract leveling jacks allowing the air suspension to obtain proper ride height.
- Clear the slide room path, clean the floor, move the driver seat forward, and after confirming the bay doors are closed, retract the slide room. When the slide room is fully retracted, secure all slide room awning locks.

NOTE:
To operate the slide-out room, the ignition must be OFF and the park brake set.

- Secure and fasten the bi-fold and pocket doors. Lock the shower door.
- Close roof vents and windows.
- Secure all loose, heavy or sharp objects in case of a sudden stop.
- Close all cabinet doors and drawers.
- Turn off interior lights.
- Disengage the water pump.
- Check the fuel level gauge and all other dash gauges for operation and correct level indications.

Departure Checklist:

- Check items in storage bays to make sure shifting or damage of items will not occur.
- Look around, above and under the motorhome for obstructions. Check for debris stuck between the rear dual tires.
- Walk around the motorhome and camp area checking for forgotten items.
- Outside compartment doors should be closed and locked.
- Check operation of all exterior lights, headlamp, taillamp, brake and clearance lights.
- Secure and lock the entry door for travel.
- Secure all awning travel locks.
- Ensure jack pad is clear of debris when retracting hydraulic jacks. Loose rocks, gravel and debris can be thrown from the jack pad and can possibly damage the tow car.
- Pull forward out of the campsite. Be sure the site is clean and no items are forgotten.

EMERGENCY ROADSIDE PROCEDURES

If an emergency situation occurs, use the appropriate braking technique and pull off the roadway a safe distance from traffic (if possible). Set the parking brake and turn on the hazard warning flashers, especially when parked alongside traffic lanes. In the event of an emergency stop due to a mechanical breakdown or other motorhome related problems, contact the manufacturer's **Customer Support** (**1-877-466-6226**) or an emergency service provider.

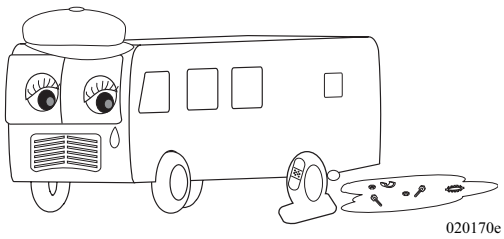

Road flares or reflective warning signs should be displayed if the motorhome is alongside of the road for any length of time. Guidelines for placing the warning triangles depend upon the road characteristics and visibility. For example: The standard placement is 10 feet, 100 feet and 200 feet from the rear of the motorhome when on a divided highway or one-way road. On a two-way road, with traffic traveling both directions, the same placement would also be required at the front of the motorhome. Roads with curves and hills may require the placement of the last/furthest triangle to be 500 feet behind the motorhome in order to safely warn approaching traffic.

INFORMATION:
In the event of a roadside emergency relating to a Cummins engine, contact the nearest Cummins Center at 1-800-DIESELS (800-343-7357).

INFORMATION:
For a roadside emergency relating to a Detroit Engine, contact Detroit Diesel Customer Assistance at 1-800-445-1980 (US and Canada).

OnStar® (Optional)

OnStar® combines existing technology with a sophisticated Global Positioning System (GPS) to track motorhome location. OnStar® services provide travel aids that range from helping to find a destination to arranging for motorhome roadside assistance. In an emergency situation, OnStar® can utilize vast resources to summon state or local emergency assistance.

In the event of motorhome breakdown, subscribers can contact an advisor at the call center. Concerns involving interior operations that do not impede travel should be made directly to the Monaco Coach Corporation Customer Service Department.

Prior to contacting OnStar®, the motorhome must be registered with Monaco Coach Corporation. A service contract to activate the service can be acquired by either pushing the blue OnStar® button located in the motorhome cockpit, or by calling 800-ONSTAR7.

Motorhome components comprising the OnStar® system include a microphone, three-button interface with volume control, and a jack for use of hands-free headset communication.

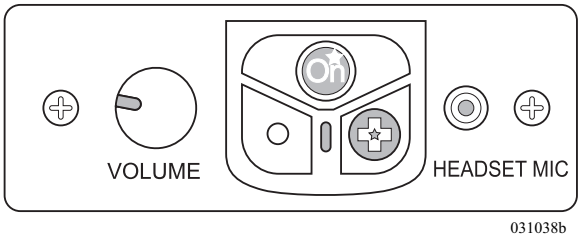

Three-Button Interface w/microphone and headset jacks.

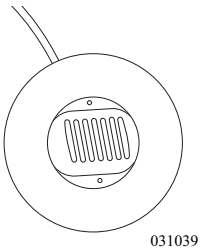

Microphone

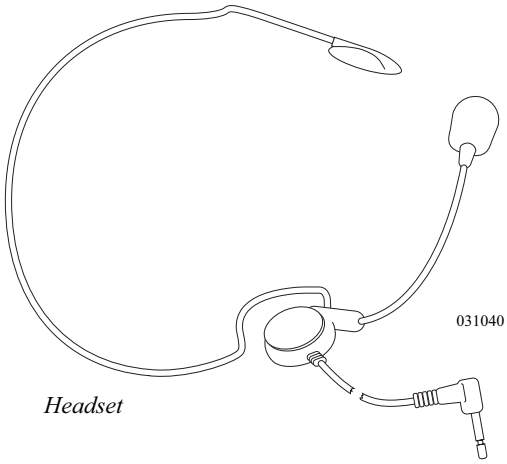

Headset

Operation:

OnStar® operates using the motorhome electrical system powered by the house batteries. If the house battery cut-off switch is turned off, or the batteries are dead, damaged or disconnected, the OnStar® system will not function.

Three Button Keypad:

- The **blue On** button connects directly to the OnStar® center.
- The primary function of the **red** emergency button is to summon emergency assistance by alerting OnStar® of a priority call. The operator will inquire of the nature of the emergency. If there is no response, the OnStar® operator will GPS the vehicle location and summon immediate emergency assistance. **OnStar® will not determine if medical help is necessary, regardless of the subscriber description of symptoms.**
- The **white** button is used to answer and disconnect calls to the OnStar® call center, and to operate the optional Personal Calling and Virtual Advisor features. For more information on Personal Calling and Virtual Advisor, contact the OnStar® call center.

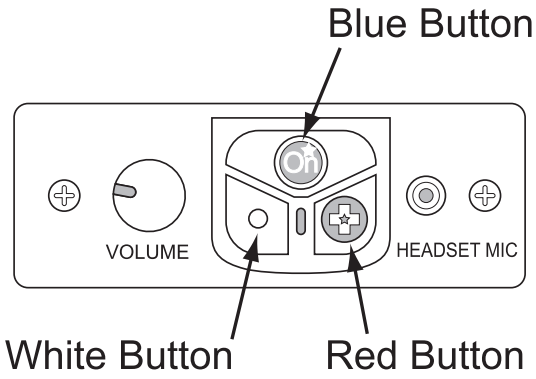

031038

In Case of Flat Tire

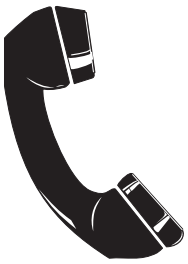

070175

In the event of a flat tire, it is recommended to call for roadside assistance. The size and weight of the motorhome and its tires require proper equipment to change the tire. A professional service technician will have the equipment and training needed to repair or replace the tire. In the case of sudden tire failure, avoid heavy braking. Hold the steering wheel firmly and gradually decrease speed. Slowly move to a safe off-road place, which should be a firm level spot. Turn the ignition off and turn the hazard flasher system ON. Save the old tire for possible warranty coverage.

INFORMATION:
***Goodyear* emergency service number is 877-484-7376.**

Light - Retractable

A retractable light is installed for use in places of limited lighting, such as outside access to the rear engine compartment, and roadside electrical compartments.

To Use the Retractable Light:

1. Activate the light by moving the Cargo Light switch (located directly inside the entry door) to the ON position. Turn on the switch on the light.
2. The light is on an 18' retractable reel cord. To operate, lift the lever and pull the light out.
3. A magnetic base attached to the light enables you to securely position the light for hands free operation.
4. To rewind, crank the handle in the retract direction. When fully retracted, push down on the lever handle to keep the light locked into place.
5. To replace bulb, push down on the clear plastic cover and twist.

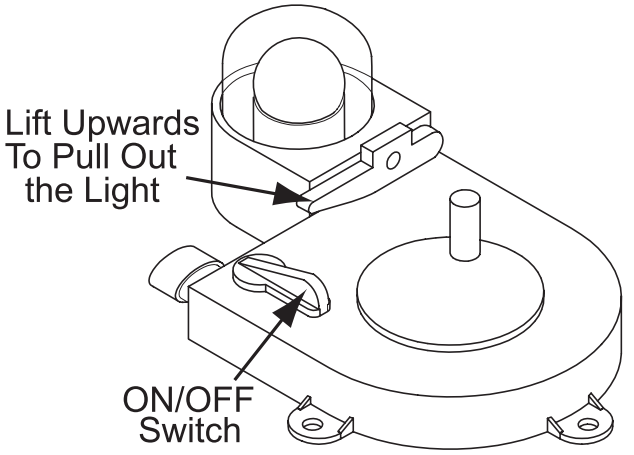

030990

Running Out of Fuel

When the motorhome runs out of fuel, air will enter the fuel lines and fuel system components of the engine. Diesel engines are sensitive to air in the fuel system. If the engine has stalled due to low fuel, it will be necessary to prime the fuel system to restart the engine. Several gallons of fuel will be necessary in the tank before attempting to prime the fuel system.

CAUTION:
The engine will sputter for a short period before it stops running due to a low fuel condition. Pull off the road on a firm level surface a safe distance away from traffic. Steering may become stiff if the engine stops running.

To Prime the Fuel System:

1. Add 30 gallons of fuel to the empty tank, possibly more if the motorhome is parked on an angle.
2. Follow the instructions *"To Prime the Fuel System"* located in the **Fuel System - *Fuel Filters*** of **Section 10**.

Dead Chassis Battery

A weak or discharged battery will not supply the amount of CCA (Cold Cranking Amps) necessary to initiate the required voltage to start the engine. If the engine fails to crank, or cranks slowly due to a weak chassis battery, there are electrical back-up systems in place that may increase chassis battery voltage.

Jump Starting Using the Battery Boost Switch:

The Battery Boost switch, located on the dash, engages a heavy-duty solenoid to electrically connect the house batteries to the engine battery in the event the engine will not crank or cranks slowly. The solenoid is designed for short-term high current intermittent use. Engaging the boost solenoid for an extended period will damage the solenoid.

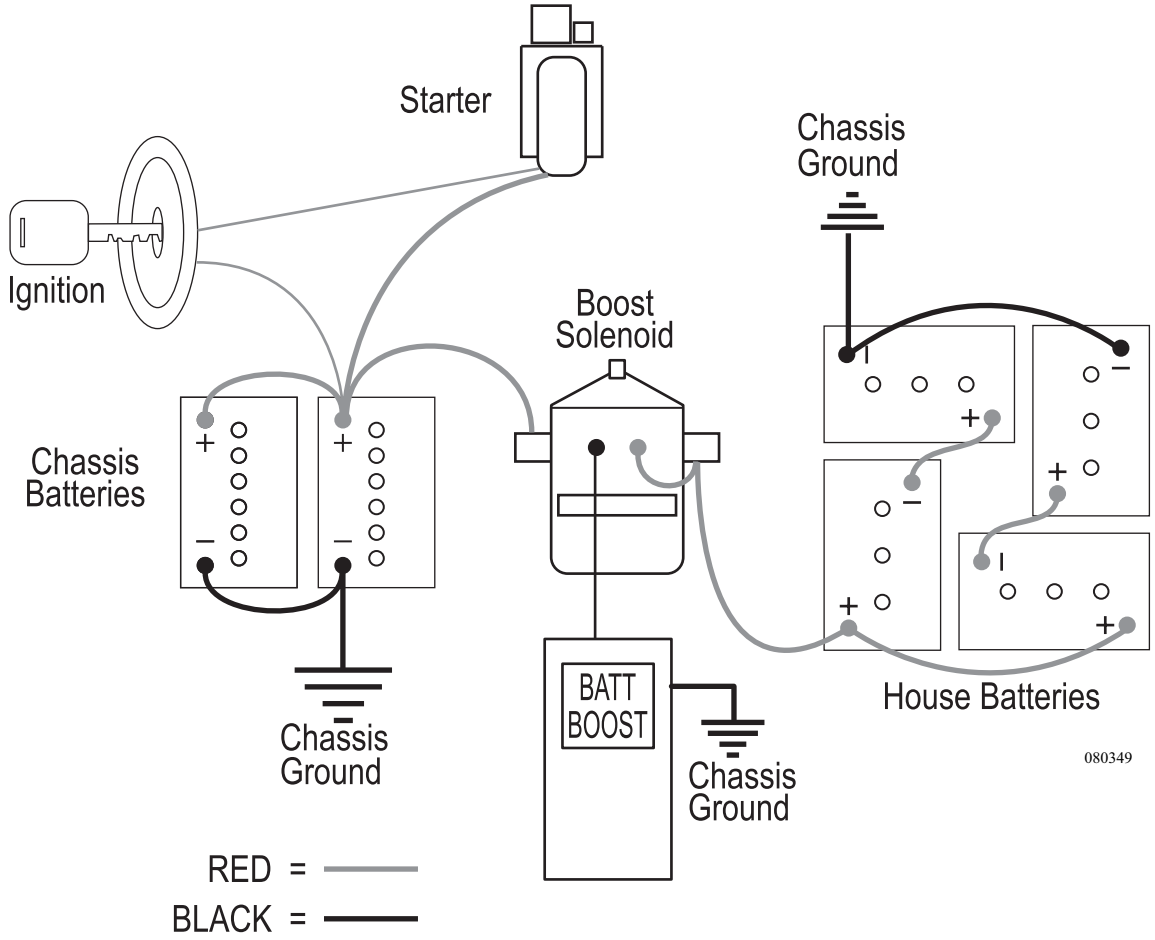

- With the ignition key off, press and hold the Battery Boost switch for ten seconds. After ten seconds, continue to hold the switch down and turn on the ignition. Observe the battery volt gauge on the dash, it should read at least 12 Volts. If voltage is sufficient, try to start the engine.
- If the engine fails to crank, or does not crank fast enough, discontinue the attempt. Continued attempts will only diminish any remaining surface charge in the chassis battery and end future alternative attempts.
- Next, start the generator. This may require using the Battery Boost switch for the generator to start from the engine battery. Once the generator is operating, the electrical combination of the generator, inverter and battery maintainer will charge the batteries.
- Allow the generator to run approximately ½ hour before attempting to start the engine.
- After ½ hour of generator operation, leave the generator on and hold down the Battery Boost switch for one minute. Release the switch for one minute, then press the switch again for one minute. Alternate this cycle three to five times to avoid overheating the Boost solenoid.
- Next, hold the switch down and turn the ignition on. The battery voltage gauge on the dash should indicate at least 12 Volts. If voltage is sufficient with the Boost switch held down, try to start the engine.
- If the engine fails to crank, or fails to crank quickly, the chassis battery may be depleted and the motorhome will require jump-starting or an external charger hooked to the chassis battery. When using jumper cables to start the engine, the cables must connect in a parallel configuration. That is positive (+) to positive (+) and negative battery (-) to negative chassis (-). Always connect the positive (+) before connecting the negative (-). To prevent arcing when disconnecting the cables, disconnect the negative (-) before disconnecting the positive (+).

WARNING:
Batteries can emit explosive gas. Always ventilate the battery compartment prior to any work or service to the batteries. Extinguish all smoking material and keep all open flame and spark producing devices away from battery area.

CAUTION:
A large amount of electrical current is required to jump-start an engine. The sizes of the battery, alternator and jumper cables supplying the "jump" are current limiting factors. Voltage fluctuations that occur during a jump-start procedure can damage sensitive electronic equipment and charging systems. Wait a sufficient amount of time for a surface charge to build before attempting to crank an engine when using a jump-start procedure. If uncertain about performing a jump-start procedure, contact a professional. Damage and personal injury can occur if this procedure is not correctly performed.

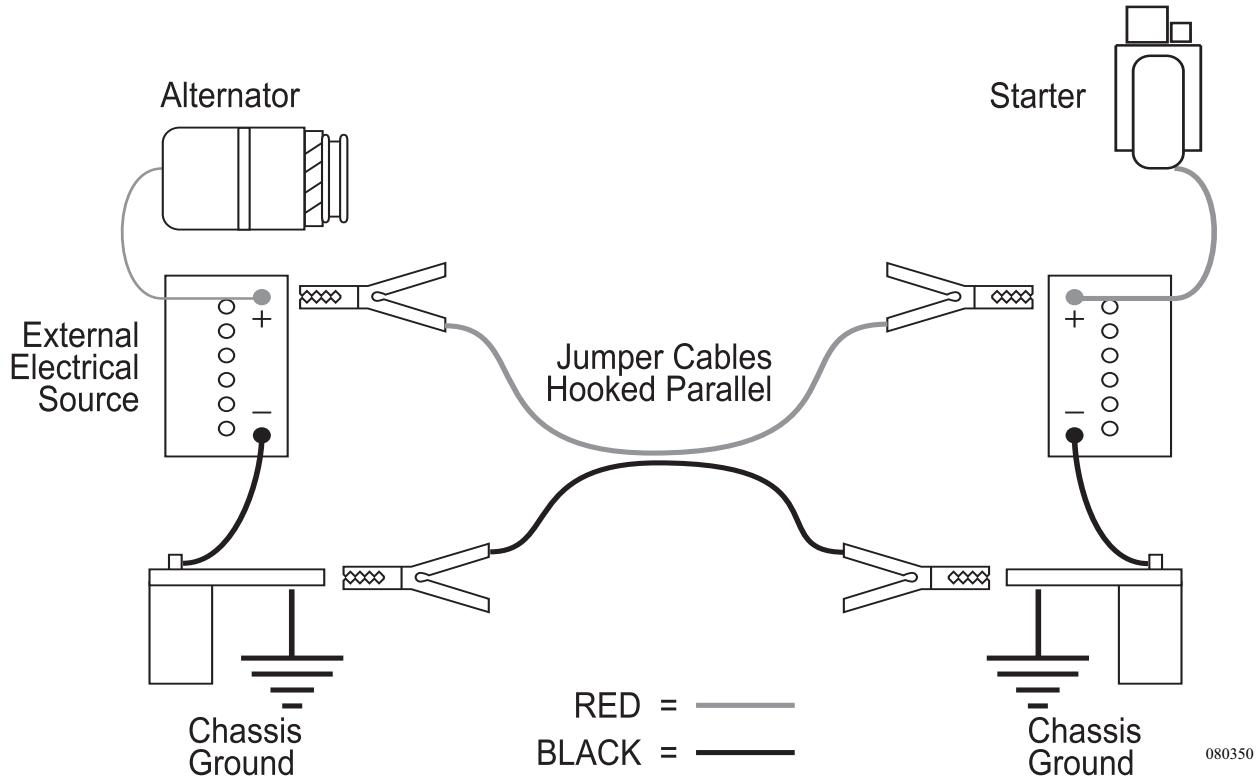

Jump Starting using an external source:

1. When using an external electrical source to connect to the chassis battery, turn the main battery disconnect switches **OFF** prior to hooking up the jumper cables.
2. Hook up the cables then wait several minutes to allow a surface charge to build in the chassis battery before attempting to start the engine.
3. Turn **ON** the battery disconnect switches and attempt to start the engine. **DO NOT crank the engine more than a few seconds**.
4. After the engine has started disconnect the cables. Disconnect the negative (-) cables before disconnecting the positive (+) cables to prevent arcing.
5. If the engine does not crank, or cranks slowly, **DO NOT CONTINUE**. Extensive damage, fire or injury can occur. Obtain help from a qualified technician.

WARNING:
The gas around the battery can explode if exposed to flames, sparks or other sources of ignition, resulting in injury or vehicle damage. Batteries contain sulfuric acid that can burn skin, eyes and clothing. Do not connect the end of the second cable to the negative (-) terminal of the battery to be jumped. A spark may cause an explosion of the gases that surround the battery. Connect only to the chassis, away from the battery.

CAUTION:
The charging system on the towed vehicle does not supply the amperage necessary to jump-start the motorhome. Voltage sensitive equipment on the towed vehicle can be damaged, leaving the towed vehicle disabled. If a jump-start is necessary, it is recommended to call Roadside Assistance. They will have the equipment necessary to jump-start the motorhome.

If calling a towing company for service, it is recommended to use a lowboy/landall type of trailer. If a tow truck is used it needs to have a support arm that goes under the motorhome and secures to the front axle. Inform the tow company of the axle weights and total weight of the motorhome. Other important information is the length of the motorhome, number of passengers and milepost location. Two tow trucks may be necessary. One to tow the motorhome and the other to tow a trailer or the tow vehicle if it is not operational.

The towing company may need to locate the air nipple to release the air brakes (air brakes only). The air nipple is located in the generator compartment and should be used by towing personnel only. Generally, if the motorhome ever needs to be towed, use the following instructions:

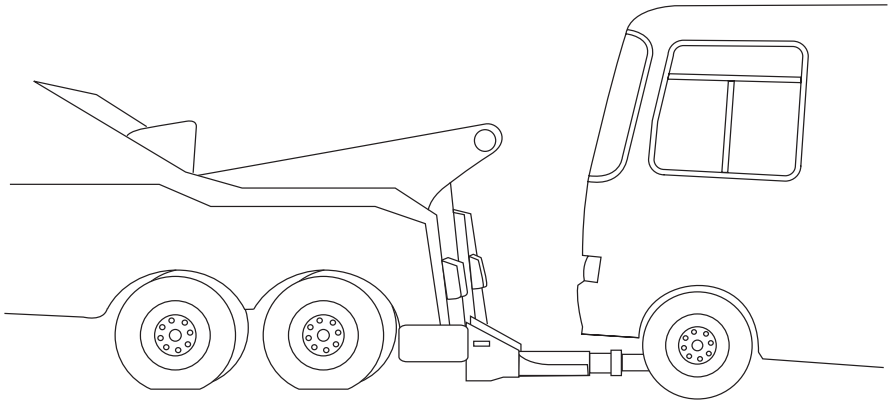

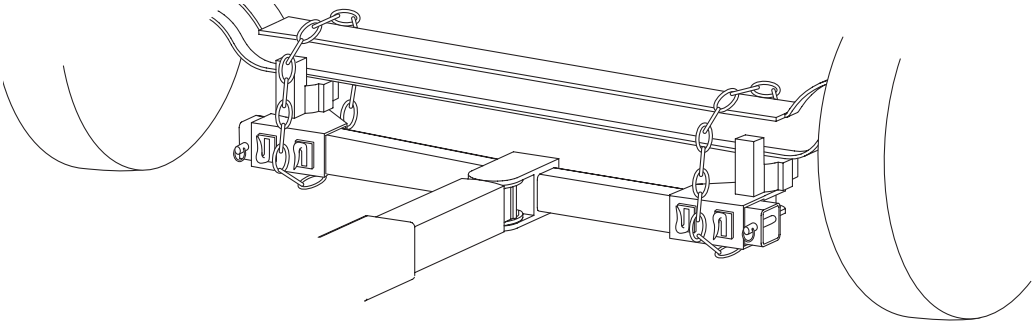

- Secure any loose or protruding parts if the motorhome is damaged.
- **Inspect** the points of attachment on a disabled motorhome. If attachment points are damaged, select other attachment points at a substantial frame structural member.
- Never allow anyone to go under a motorhome while it is being lifted by towing equipment unless the disabled motorhome is adequately supported by safety stands.
- Do not tow the motorhome from the rear. Towing from the rear will severely overload the front tires and suspension possibly resulting in tire and/or front suspension failure. Rear frame extensions are not designed to support weight loads imposed by lifting the motorhome from the rear.

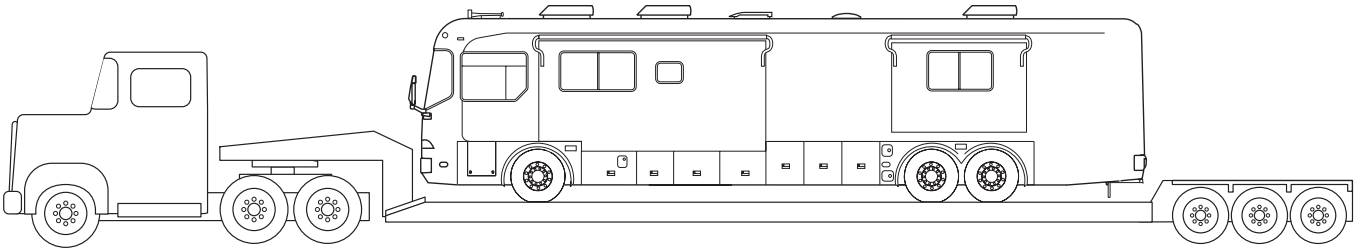

020228

- If the rear wheels are disabled, place the motorhome on a flat bed trailer, or use a heavy duty dolly under the rear wheels and tow the motorhome from the front.
- **The drive shaft must be removed to prevent damage to the transmission.** Secure end caps to prevent losing or contaminating the needle bearings.
- The mud flap may need to be removed to prevent damage due to limited ground clearance.
- When towing a motorhome equipped with the HWH Air-Leveling System, the ignition MUST be left in the ON position and the Travel indicator lamp on the HWH panel must be lit for the air suspension to operate. If the ignition system is not functioning, or if chassis voltage is below specification, the motorhome must be placed on a lowboy/landall trailer to prevent suspension damage.

WARNING:
In case the motorhome requires towing, ensure all precautions are followed. The drive shaft must be disconnected and the mud flap may need to be removed. The manufacturer WILL NOT cover damage to the motorhome caused by a towing company.

Disabling Parking Brake

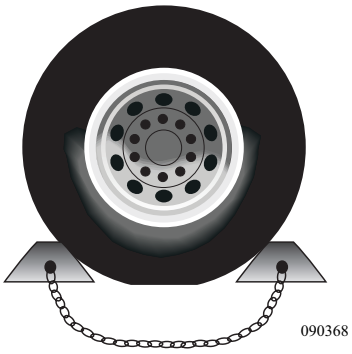

090368

Example of a properly chocked wheel

The park/emergency brakes apply to the drive axle only. The brakes can be manually released if the air system will not build sufficient air pressure to release them. This emergency procedure is to be used by trained technicians or towing personnel to move the motorhome to a safe location or repair facility.

WARNING:
Only trained personnel should perform this procedure.

Disc Brakes:

- Place wheel chocks firmly against the wheel before performing this procedure.
- Remove the plug from the center of rear brake chamber on the drive axle.
- Remove the caging tool from its holder on the brake chamber and insert the tool into hole. Turn clockwise to engage.
- Screw nut and washer onto caging tool. Use a wrench to tighten the nut, compressing the internal spring to release the brake.
- Repeat procedure for the other side.
- After towing, or when air pressure is again available, loosen the nut and remove the tool. Return the caging tool to its original location and replace the plug.
- Repeat for the other side.

WARNING:
Failure to securely chock the wheels can result in the motorhome rolling when the spring brakes are released. Severe injury or death can occur.

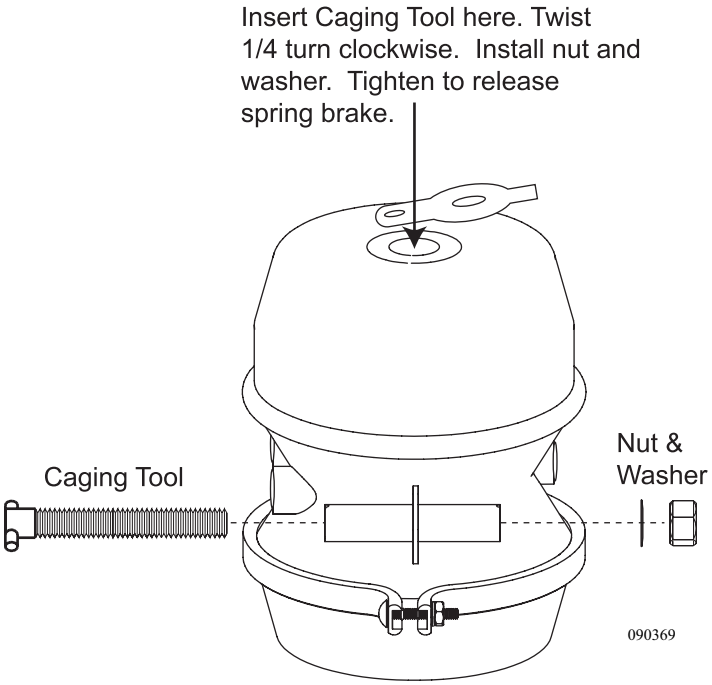

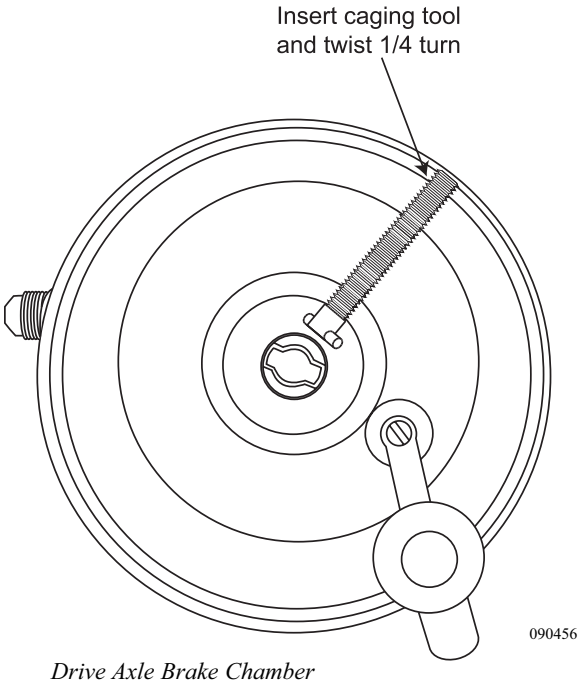

Drive Axle Brake Chamber

TIRES

Tires designed for the motorhome are a very technical and engineered product. Since the tire is the only contact the motorhome has with road surface, it is critical that proper tire pressures be maintained. Improper tire pressure will lead to abnormal wear or sudden tire failure. The motorhome must be weighed fully loaded before proper tire inflation pressures can be determined. The following information concerning tires and weighing the motorhome are set in the order in which the process is performed or experienced.

The tire performs additional functions of traction for moving stopping and steering, as well as providing a cushion for the motorhome. Modern tire technology blends a unique mix of chemistry, physics and engineering to provide a high degree of comfort, performance, efficiency, reliability and safety. To obtain the maximum wear and best service from tires, it is helpful to understand the components and functions of the tire.

Tire Components:

Tread: Provides traction and cornering grip.

Belts: Stabilize and strengthen the tread.

Sidewall: Protects the side of the tire from road and curb damage.

Body Ply: Gives the tire strength and flexibility.

Bead: Assures an air-tight fit with the wheel.

Inner Liner: Keeps air inside the tire.

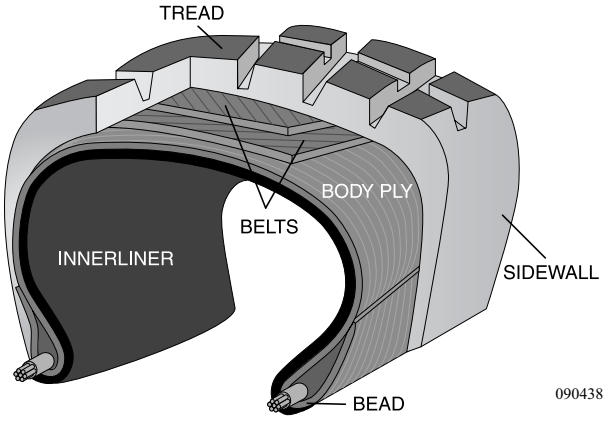

Importance of Air Pressure

The most important factor in maximizing the life of the tires is maintaining proper inflation. Driving on any tire that does not have the correct inflation pressure for the load of the motorhome is dangerous and may cause premature wear, tire damage and/or loss of control of the motorhome.

An under-inflated tire will build up excessive heat that may go beyond the design limits of the rubber and radial cords and could result in sudden failure. An under-inflated tire will also cause poor motorhome handling, rapid and/or irregular tire wear and an increase in rolling resistance that results in decreased fuel economy.

An over-inflated tire will reduce the tire's footprint/contact patch with the road, thus reducing traction, braking capacity and handling of the motorhome. Over-inflation of a tire for the load will result in a harsh ride, uneven tire wear and is susceptible to impact damage. Maintaining correct tire inflation pressure for each loaded wheel position on the motorhome is of the utmost importance and must be a part of regular motorhome maintenance.

WARNING:
Driving on a tire that is under-inflated can exceed the design limits of the tire and may damage the sidewall. A damaged sidewall can burst upon inflation resulting in serious damage, injury or death. Aged tires are also susceptible to sidewall damage.

Tire Pressure Inflation Guideline

Federal law requires that the specifications for the tire's maximum load rating be molded into the sidewall of the tire. The amount of air pressure to use is dependent on the weight of the motorhome when fully loaded. The tire chart (Section 10) indicates the weights that can be properly supported by varying air pressures. Decreasing air pressure decreases load carrying capacity.

Always comply with the tire manufacturer's recommended pressure inflation guideline. The actual weight of the motorhome can vary significantly depending on how it is loaded. For optimum tire wear, ride and handling always comply with the manufacturer guideline. A tire inflation chart listing proper inflation pressure for different loads can be found in this section.

The tires of the motorhome are inflated to pressure(s) appropriate for the actual weight on each axle in the unloaded, shipped condition. When the motorhome is loaded, check and adjust the inflation pressure on each tire as needed.

Always inflate tires to the pressure indicated in the tire chart for the load carried by the tire. **DO NOT OVERINFLATE OR UNDERINFLATE THE TIRES**.

The Gross Axle Weight Rating (**GAWR**) of the axles listed on the federal certification label attached to the motorhome is the maximum allowable loaded weight on an axle.

When the actual loaded weight of the motorhome and the weight on each axle is unknown, follow the recommended tire inflation pressure(s) listed on the federal certification label. When loading a motorhome never exceed the motorhome's Gross Vehicle Weight Rating (**GVWR**) or the GAWR for each axle.

Contact the tire manufacturer for further information concerning proper tire pressure inflation and other tire issues.

Tire Chart - Goodyear

Understanding the Inflation Table:

The tire size is on the left margin of the table. Determine the **Single** inflation reading or **Dual** inflation reading, denoted with a **D** or **S** on the Table. **Single** is for the front axle and tag axle (if equipped). **Dual** is for the drive axle.

Find the corresponding psi at the top columns to see the corresponding maximum weight capacity for that psi.

NOTE:
Every load range has a maximum rating as well as a minimum rating. Do not exceed those ratings.

Rated load capacities are listed for individual tires in a **Dual** or **Single** position.

LOAD & INFLATION TABLE

TIRE SIZE	MAX Speed Rating (MPH)	Dual (D) Single (S)	INFLATION PRESSURE PSI												
			65	70	75	80	85	90	95	100	105	110	115	120	125
8R19.5	75	D	2350	2460	2570	2680	2780	2880	2980	3070	3160	**3375(F)**			
		S	2410	2540	2680	2800	2930	3060	3170	3280	3400	**3500(F)**			
225/70R19.5	75	D		2720	2860	3000	3115	3245	**3415(F)**						
		S		2895	3040	3195	3315	3450	**3640(F)**						
245/70R19.5	75	D		3415	3515	3655	**3875(F)**	3940	4075	**4375(G)**					
		S		3640	3740	3890	**4080(F)**	4190	4335	**4545(G)**					
265/70R19.5	75	D				3750	3930	4095	4300	4405	4560	4805	4860	**5070(G)**	
		S				3970	4180	4355	4540	4685	4850	5070	5170	**5355(G)**	
9R22.5	65	D	3120	3270	3410	3550	3690	3820	**3950(F)**						
		S	3190	3370	3560	3730	3890	4050	4210	4350	**4500(F)**				
10R22.5	65	D	3690	3870	4040	4200	4375	4520	4670	**4875(F)**	4970	5110	**5250(G)**		
		S	3770	4000	4210	4410	4610	4790	4970	**5150(F)**	5320	5490	**5680(G)**		
11R22.5	75	D				4760	4950	5120	5300	5470	**5750(G)**	**5800(H)**			
		S				4990	5220	5430	5640	5840	**6175(G)**	6240	6430	**6610(H)**	
12R22.5	65	D				5190	5390	5590	5780	5960	6150	6320	6500	**6750(H)**	
		S				5450	5690	5920	6140	6370	6590	6790	7010	**7390(H)**	
245/75R22.5	75	D		3260	3425	3640	3740	3890	4080	4190	4335	**4410(G)**			
		S		3470	3645	3860	3980	4140	4300	4455	4610	**4675(G)**			
255/70R22.5	75	D		3585	3765	3970	4110	4275	4410	4455	4610	4675	**5070(H)**		
		S		3815	4005	4190	4370	4550	4675	4895	5065	5205	**5510(H)**		
265/75R22.5	75	D			4040	4205	4370	4525	4685	**4805(G)**					
		S			4070	4255	4440	4620	4800	4975	5150	**5205(G)**			
275/70R22.5	75	D					4535	4750	4960	5165	5370	5575	5775	5975	**6175(H)**
		S					4885	5080	5305	5530	5750	5965	6185	6400	**6610(H)**
275/80R22.5	75	D					4855	5080	5305	5525	5745	5965	6180	**6395(H)**	
		S					5265	5515	5755	6000	6235	6475	6710	**6940(H)**	
295/75R22.5	75	D			4690	4885	5070	5260	5440	**5675(G)**	5800	**6005(H)**			
		S			4725	4945	5155	5370	5510	5780	5980	**6175(G)**	6370	**6610(H)**	
295/80R22.5	75	D				4855	5100	5335	5570	5805	6035	6265	6490	6720	**6940(H)**
		S				5480	5750	6020	6285	6550	6810	7070	7320	7580	**7830(H)**
315/80R22.5	75	D					5840	6070	6395	6540	6770	6940	7210	**7610(J)**	7390
		S					6415	6670	6940	7190	7440	7610	7920	**8270(J)**	8820
285/75R24.5	75	D			4740	4930	5205	5310	5495	**5675(G)**					
		S			4770	4990	5210	5420	5675	5835	6040	**6175(G)**			

The motorhome manufacturer is not the author of this chart and makes no representation or warranty concerning the accuracy of the information disclosed by the chart. Monaco is not responsible for the accuracy of the information disclosed or for any errors within the Tire Inflation Chart.

The Load and Inflation Table will help determine correct tire inflation pressure after properly weighing the motorhome. All pressures are rated at a cold psi. Cold psi is defined as early in the morning before the day's ambient temperature, sun's radiant heat or the heat generated while driving have caused the tire pressure to temporarily increase. This means the tire inflation pressure should be checked early and when the motorhome has not been driven more than one mile. Check tire inflation pressure regularly. The check interval should be in the morning, before the "drive" trip and every morning on extended trips. A quality truck tire gauge with an angle airhead is needed to access the dual wheel positions of the drive axle. Ensure the valve cap is replaced on the stem after the inflation pressure is checked. Use valve stem caps with a positive seal to prevent air escaping from the valve stem. If there are extension hoses on the valve stem, make sure they are good quality reinforced stainless steel braid. Attach hoses securely to the outer wheel.

The valve stem cap guarantees the valve core will remain free of dirt and foreign material. Material lodged between the valve core and internal stem can cause slow leaks resulting in tire failure.

Optimum tire performance is achieved at proper inflation pressure for the load carried. Do not mix tires of different tread patterns, size or construction on the same axle. The difference in traction could cause rear end gear fight and mechanical damage to the drive train.

CAUTION:
Never let air out of a hot tire.

Over-inflation can cause:
- Hard ride.
- Tire bruising or carcass damage.
- Rapid tread wear in the center of the tire.

Under-inflation can cause:
- Tire squeal on turns.
- Separations.
- Rapid and uneven wear on the edges of the tread.
- Circumferential breaks.
- Tire container may bruise or rupture.
- Higher risk of road hazard.
- Tire cord breakage.
- Loss of casing durability.
- Excessive tire temperature.
- High fuel consumption.
- Reduced handling quality.

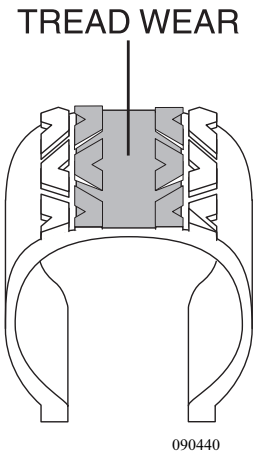

Example of Over-inflation
More wear in center.

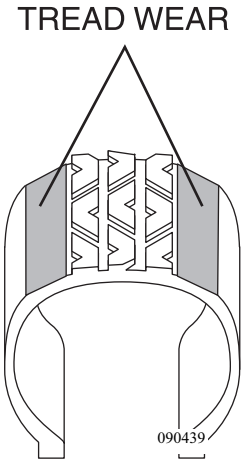

Example of Under-inflation
More wear on edges.

WARNING:
A slow leak may go unnoticed on one of the dual tires. This can cause the good tire to fail exceeding the load limit it is designed to carry. Tires with damaged sidewalls can burst upon inflation. A flat or nearly flat tire can also generate enough heat from friction to ignite.

Unequal tire pressures on same axle can cause:

- Uneven braking, swerve upon acceleration.
- Steering lead, torque steer.
- Reduced handling quality.

WARNING:
For safety purposes clear the area of people and pets during tire inflation. Inflate tires using a remote inflation device.

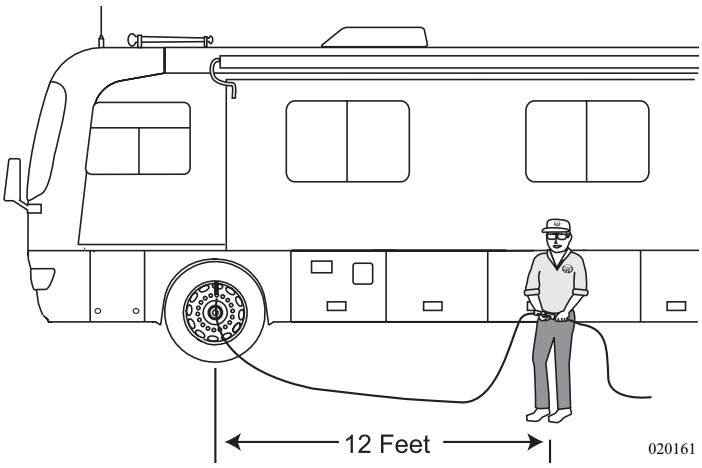

Air Pressure Checklist

1. When inspecting the tires, confirm the tires are cool before increasing or reducing air pressure. Even driving a short distance can heat up tires.

   NOTE:
   If the motorhome must be driven a distance to get air, check and record the tire pressure first and add the recorded calculation when reaching the pump. It is normal for tires to heat up and the air pressure inside to go up as driven. Never "bleed" or reduce air pressure when tires are hot.

2. Remove the cap from the valve on one tire.
3. Firmly press a tire gauge onto the valve and record reading.
4. Add air to achieve recommended air pressure.
5. If the tire is over filled, release air by pushing on the metal stem in the center of the valve. Recheck the pressure with the tire gauge.
6. Replace the valve cap.
7. Repeat with each tire.
8. Visually inspect all the tires for nails, or other objects that could be embedded or puncture the tire and cause an air leak.
9. Check the sidewalls for gouges, cuts, bulges, or other irregularities.

   NOTE:
   Air pressure in a tire goes up (in warm weather) or down (in cold weather) one to two pounds for every 10° F of temperature change.

Supporting When Leveling

Extreme caution must be taken to ensure that the tires are fully supported when placing blocks under the tires. The load on the tire should be evenly distributed on the support block. In the case of dual tires, distribute the load evenly on blocks for both tires. If not properly supported, the steel cables in the sidewall of the tires may be damaged and could lead to premature fatigue of the sidewall.

CAUTION:
Supporting the tires prevents damage to the sidewall of the tires and does not prevent tire roll.

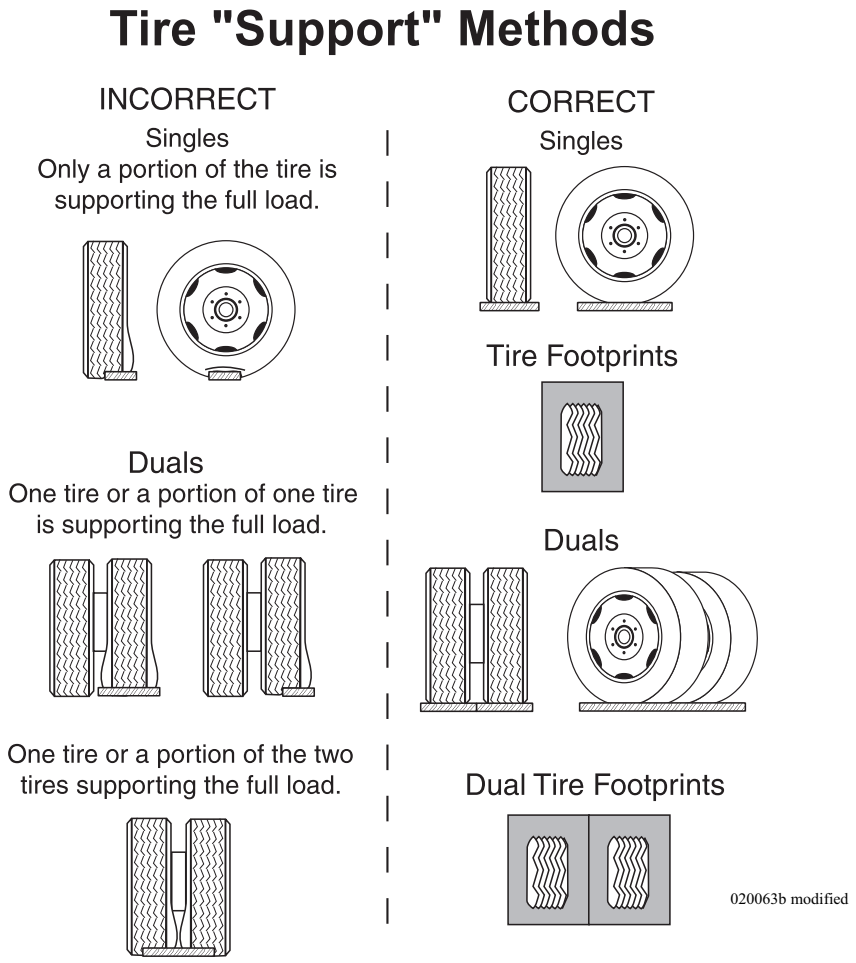

Tire Vibration

Sudden tire failure is often preceded by tire vibration. Symptoms that can cause tire failure are a bulge in the sidewall or swelling in the tire carcass. Striking an object or large hole in the road surface can damage a tire. Inspect the tires periodically thereafter as rotational forces can continue to stress damaged areas and later manifest in tire failure. If an unusual vibration begins, or a bulge is noticed in the sidewall, have the tires evaluated by a qualified professional as soon as possible.

Tire Rotation

Tire rotation can increase the useful life of the tires by achieving uniform wear on all of the tires. Have the tire manufacturer determine the rotation pattern. The first tire rotation is the most important in determining which rotation pattern to use. Any unusual or unique wear patterns, or indications of uneven wear that may have developed, should be evaluated for possible tire rotation. Misalignment, imbalance or other mechanical problems may exist and will need to be corrected prior to rotation.

Tread

To prevent skidding and hydroplaning, replace tires when the tread is worn down to 4/32 of an inch on the front, and 2/32 of an inch on the rear. Questions regarding tread wear should be directed to the tire manufacturer.

Built in tread wear indicators, or "wear bars" which look like narrow strips of smooth rubber across the tread, will appear on the tire when the tread is worn down to one-sixteenth of an inch. When "wear bars" are noticed, the tire should be replaced.

Visually check the tires for signs of uneven wear. Signs of irregular tread wear are usually exhibited by low or unusually smooth areas on the tire surface. Consult the tire manufacturer as soon as possible.

WARNING:
In many instances the life of the tires on the motorhome is not determined by mileage but by age. Tires are subject to weathering. Weathering cracks run in circumference with the tire. Though the sidewall of the tire may look fine and be structurally sound, weathering can occur inside the well of the tread, therefore replacement may be determined not by mileage but age. Have the tire manufacturer inspect the tires for age weathering.

Storage of Tires - Long Term

A cool, dry, garage with a sealed cement floor is the preferred method of storage. Tires stored outside may prematurely age.

Prior to Storage:
- Thoroughly clean the tires.
- Unload the motorhome to reduce weight on the tires.
- Ensure the surface is reasonably level, firm, clean and has good drainage.
- Inflate the tires to the maximum inflation pressure as indicated on the Federal Identification Tag.

During Storage:

- Cover the tires to block direct sunlight.
- Periodically ensure tires are at proper pressure.
- Move the motorhome every three months to prevent cracking in bulge areas, as well as flat spotting from prolonged sidewall strain and tread deflection.

Removal from Storage:

Before removing the motorhome from long-term storage thoroughly inspect each tire's tread area and air pressure. If the tires have lost air during storage, inflate them to the correct pressure.

WHEEL MOUNTING

Hub Piloted Mounting:

- Before using flange nuts that have already been used in service, apply two drops of oil at one point between the flange and hex. This will allow parts to rotate freely and provide the proper clamping force when tightened. Use any common lubricant typically used for fasteners. Examples are motor oil and general purpose lubricating oils. Excessive lubricant is not desirable, and will not improve nut torquing performance. Excessive lubricant makes the nuts hard to handle, attracts dirt, and may cause unsightly appearance to the wheel. Only used nuts require lubrication.
- Flange nuts generate higher clamping force. Always use grade eight studs with hub mount wheels.
- Before installing the wheels, lubricate the hub pilot pads with a drop of oil to prevent galling. Do not lubricate any other wheel or hub surface.
- For a hub with intermittent pilot pads, position a pad at the twelve o'clock position to center the wheel and reduce runout.

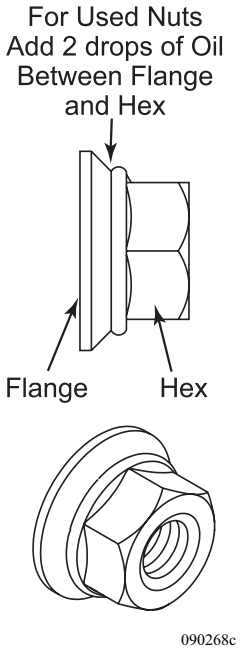

Flange Nut:
Front and side view.

NOTE:
Loosen and tighten lug nuts in a star pattern sequence. Sequence tighten to 50 ft. lbs. first, then sequence tighten to 500 lbs. Over-tightening can cause distortion.

WARNING:
Never use wheels or lug nuts different than the original equipment as this could damage the wheel or the mounting system. Damage to the wheel or mounting system could cause a wheel to come off while the recreational vehicle is in motion.

Front Wheels:

Slide the front wheel over the studs. Use caution to avoid damaging stud threads. Snug the nuts in sequence. When all nuts have been seated, tighten the nuts to 500 ft. lbs. in sequence (as in illustration).

Dual Rear Wheels:

Slide the inner dual wheel over the studs. Use caution to avoid damaging threads. Align the handholds for valve access and slide the outer dual wheel over the studs, again using caution to avoid damaging the stud threads. When all nuts are seated, tighten the nuts to 500 ft. lbs. in sequence (as in illustration).

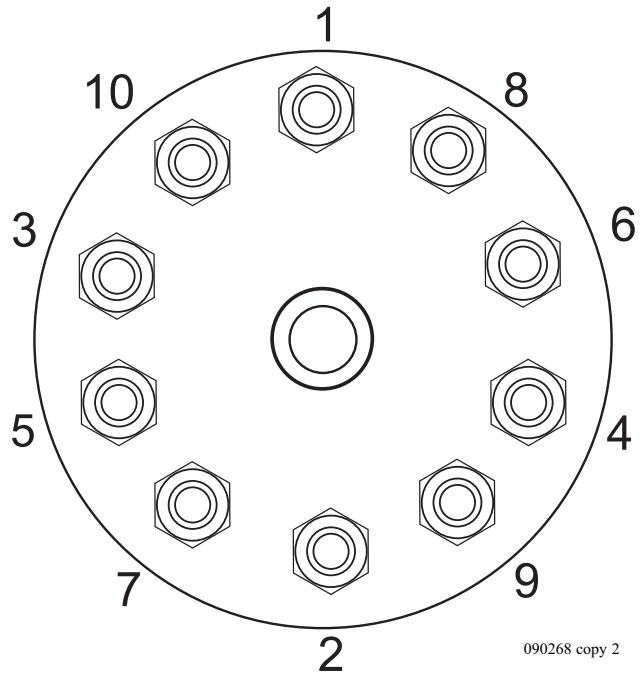

Nut Tightening Sequence

The hub mount wheels use two-piece flange cap nuts for both front and rear applications. No inner cap nuts are required.

Torque the Nuts Properly:

- Tighten the wheel nuts to the recommended lug nut torque. Do not over tighten.
- Maintain the nut torque at the recommended level through planned periodic checks or at 10,000 miles intervals, whichever comes first.
- If air wrenches are used, they must be periodically calibrated for the proper torque output. Use a torque wrench to check air wrench output and adjust line pressure for the correct torque.

WEIGHING THE MOTORHOME

Proper weight distribution, load management and operating within established limitations will aide in safe and enjoyable travel. The information in this section outlines guidelines and provides worksheets for weighing procedures.

Proper weight distribution and load management is an individual responsibility. In order to correctly manage load and weight distribution, more than one weight measurement will be required. Each wheel position must be weighed to accurately determine the weight placed on each wheel position for proper weight computations. The entire process of weigh management begins with the Gross Vehicle Weight Rating as listed on the Federal Certification Label. **This weight cannot be exceeded.**

CAUTION:
Most States limit the amount of weight carried by any single axle position. It is the responsibility of the operator to know the legal weight limit of the State in which they travel.

Weight Terms

Numerous Federal, State and local governments mandate weight limits. Understanding the terminology and performing proper weighing procedure will help eliminate confusion. It is important to understand there are two reasons to weigh the motorhome. One to find out the **Cargo Carrying Capacity (CCC)** and the other to ensure no axle is overloaded.

The **Gross Axle Weight Rating (GAWR)** of the axles is listed on the federal certification label attached to the motorhome. This is the maximum allowable loaded weight on a particular axle. This label is generally located to the rear of the driver's seat, on the wall.

When the actual loaded weight of the motorhome, and the weight on each axle is unknown, follow the recommended tire inflation pressure(s) listed on the federal certification label. When loading a motorhome never exceed the motorhome's **Gross Vehicle Weight Rating (GVWR)** or the **GAWR** for each axle.

NOTE:
Contact the tire manufacturer for further information concerning proper tire pressure inflation and other tire issues.

The **Gross Vehicle Weight Rating (GVWR)** and **Gross Axle Weight Rating (GAWR)** Listed on the Federal Certification Label attached to the motorhome details the chassis manufacturer's and/or the RV manufacturer's total vehicle maximum weight rating and per axle weight rating.

The **GVWR** is the maximum total weight for which the motorhome is rated - including passengers, fluids and cargo. The **GAWR** is the maximum weight for which a single axle is designed. The tires, wheels, axle, motorhome frame and/or other components of the motorhome may limit these per axle and total maximum weight ratings.

The Federal Certification Label is a guide in knowing the maximum loaded axle weight rating **GAWR**, and subsequently the correct tire inflation pressure for that weight. Every recreational vehicle, even of the same make and model, will vary in actual loaded axle weights because of different options and personal loads.

While the actual loaded axle weight should be below the **GAWR**, the motorhome must be weighed in a loaded condition to determine actual weight. Separately weigh the front axle, rear axle and tag axle, if equipped. It is possible for a motorhome to be within the **GVWR** yet overloaded on one axle. It is even possible for one wheel position to be overloaded, even though the **GAWR** has not been exceeded. For this reason it will be necessary to weigh each wheel position of the motorhome to give a clear indication of exactly how the weight of the motorhome is distributed.

Instructions and diagrams are presented on the following pages. When the total weight and the weight on each axle is known, the tire load data chart in this manual will show the correct cold inflation pressure per tire for each axle.

There are two important factors to consider when loading the motorhome: **total weight** and **balance**. When loading heavy objects keep them as low as possible, preferably on the floor or below in storage compartments. Load weight must be distributed as evenly as possible.

The following is an explanation of commonly used weight abbreviations:

- **Gross Vehicle Weight Rating (GVWR):** Maximum permissible weight of this motorhome. **GVWR** is equal to or greater than the sum of **UVW** plus **CCC**.

- **Unloaded Vehicle Weight (UVW):** Weight of this motorhome as built at factory with full fuel, engine oil and coolants. **UVW** does not include cargo, fresh water, LP-Gas, occupants or dealer installed accessories.

- **Cargo Carrying Capacity (CCC):** Equal to **GVWR** minus each of the following: **UVW**, full fresh potable water weight (including water heater), full LP-Gas weight, and **SCWR**. Tongue weight of towed vehicle and dealer installed equipment will reduce **CCC**.

- **Gross Combination Weight Rating (GCWR):** The maximum allowable loaded weight of this motorhome and any towed trailer or towed vehicle.

- **Gross Axle Weight Rating (GAWR):** Load-carrying capacity specified by manufacturer of a single axle system, as measured at tire ground interfaces.

- **Sleeping Capacity Weight Rating (SCWR):** The manufacturer's designated number of sleeping positions multiplied by 154 pounds.

Tire Pressure:

A motorhome may weigh slightly heavier on one side. Tire inflation pressure of the heavier side tires determine the inflation pressure for all tire(s) on that axle due to the weight transfer that occurs when cornering.

Improperly inflated tires, or an incorrectly loaded suspension, can result in poor fuel economy, poor handling and over-stressed chassis components. How the motorhome is loaded will influence tire inflation pressure and the load carried by each axle. This is why each wheel position must be weighed. Motorhome axle configuration and floor plan styles will require different weighing procedures.

NOTE:
When weighing a motorhome, each tire on any axle must be inflated to the same pressure. The wheel position carrying the most weight will determine the tire inflation pressure for each tire of that particular axle.

Tag Axle Motorhome (Roadmaster Chassis):

Motorhomes equipped with a tag axle will require adjustment to the air pressure regulator for the tag axle to maintain proper axle weight distribution ratios. The adjustable regulator and gauge package are located in the engine compartment on the roadside. The regulator is designed to control the amount of air pressure in the tag axle air bags. Increasing the regulator pressure gauge reading will increase the amount of air pressure in the tag axle air bags, and downward force of the tag axle. Applying downward force to the tag axle decreases the weight carried by the drive axle.

Tag Axle Regulator Adjustment:

The pressure regulator adjustment knob has a positive lock. Pull up on the knob to unlock; push down on the knob to lock. Turn the knob clockwise to increase air pressure; turn the knob counter-clockwise to decrease air pressure. Decreasing regulator air pressure will release excess air through the regulator discharge port. Air pressure stabilization procedures will be performed each time an increase or decrease of air pressure to the regulator is made, equalizing the regulator to hold a constant air pressure setting.

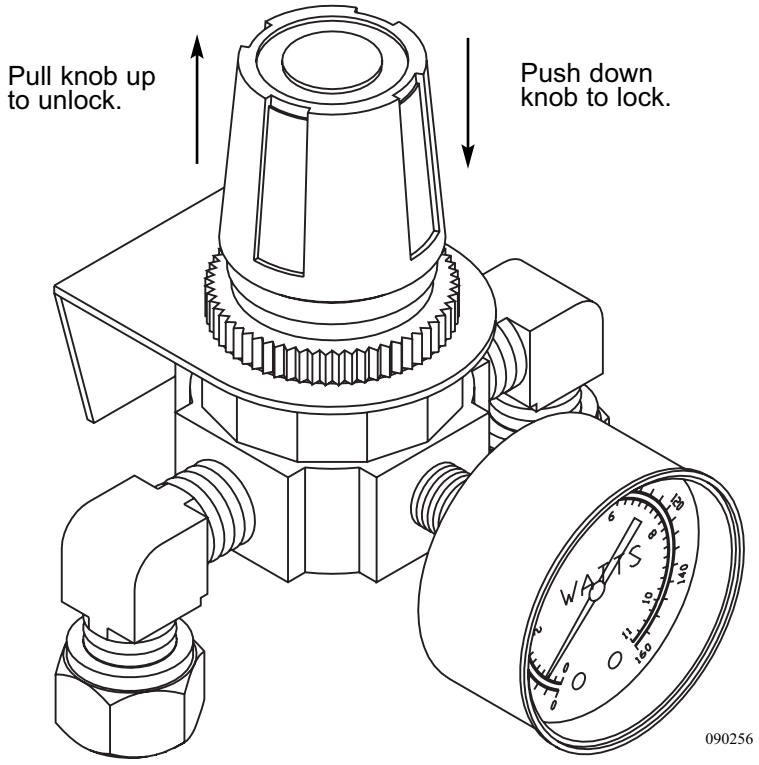

Tag Axle Regulator: Located in the Roadside Rear Engine Compartment.

To perform the stabilization procedure:

- Start the motorhome and allow the air system to reach a full charge, indicated by release of air from the air dryer.
- Raise the tag axle using the tag axle switch on the shift panel. Allow approximately 20 seconds for the system to discharge air from the tag axle air bags.
- Lower the tag axle. The regulator will hold the new air pressure setting.
- Push down on the regulator adjustment knob to lock the setting.

When increasing the air pressure setting allow approximately a two-pound pressure increase before the stabilization process. Example: If the desired setting is 30 psi, slowly rotate the regulator adjustment knob clockwise to 28 psi. Perform the stabilization procedure. Regulator setting will stabilize to approximately 30 psi. When decreasing the air pressure setting rotate the regulator adjustment knob counterclockwise, allowing the excess air to be discharged, and then perform the stabilization procedure.

Scales:

Certified public scales are located in moving and storage lots, farm supplies with grain elevators, gravel pits, recycling companies and large commercial truck stops. To locate a nearby public scale access, check the local area telephone book yellow pages under Scales-Public or Weighers. A nominal fee may be charged, but this is money wisely spent.

Weight scale types and weighing methods determine the procedure used to calculate proper tire inflation pressure and axle loading. Several types of scales are in use today. A platform scale will allow the entire motorhome to fit on the scale to read the GVW in one scale recording. A segmented platform scale is designed to weigh one axle at a time. A single axle scale weighs one axle at a time. Some scales read only one wheel position at a time due to physical size. Several scale readings may be required to determine the GAW or GVW total. Each wheel position requires weighing, referred to as a six-point weigh, to accurately determine the correct tire inflation pressure.

NOTE:
The most accurate method to determine proper tire pressure is four-point weighing. Each wheel position must be weighed independently. Weighing the entire axle will not accurately determine the total weight carried by that wheel position. When calculating the drive axle dual tire pressure using a independent corner weigh method, divide the total weight by two to determine the weight carried by each tire. Each wheel position must be weighed and recorded.

When weighing, the scales and the motorhome must be level to obtain an accurate scale reading. Even when an axle is not physically on the scale, a definite lean in the motorhome will produce inaccurate scale readings.

Weight Label

MODEL YEAR: _____ **MAKE:** _____ **MODEL:** _____

UNIT NO. _____ **CHASSIS VIN:** _____

		LBS.	KGS.
GVWR	(Gross Vehicle Weight Rating) is the maximum permissible weight of this fully loaded motorhome	_____	_____
UVW	(Unloaded Vehicle Weight) is the weight of this Motorhome as manufactured at the factory with full fuel, engine oil and coolants.....	_____	_____
SCWR	(Sleeping Capacity Weight Rating) is the manufacturer's designated number of sleeping positions multiplied by 154 pounds (70 kilograms)	_____	_____
CCC	(Cargo Carrying Capacity) is the GVWR minus each of the following: UVW, full fresh (potable) water weight (including water heater), full LP-Gas weight and SCWR (*1).....	_____	_____
GCWR	(Gross Combination Weight Rating) is the maximum allowable combined weight of this motorhome and the towable product. (*1).....	_____	_____
	FACTORY INSTALLED OPTIONS are options installed at the factory but do not include dealer installed after market equipment...	_____	_____

CARGO CARRYING CAPACITY (CCC) COMPUTATION

GVWR	_____	_____
minus UVW	_____	_____
minus fresh water (*2) weight of ___ gallons @ 8.3 lbs./gal	_____	_____
minus LP-Gas weight of ___ gallons@ 4.2 lbs./gal	_____	_____
minus SCWR of ___ persons @ 154 lbs./person.....	_____	_____
CCC for this motorhome (*3)	_____	_____

WARNING: CONSULT OWNER MANUAL(S) FOR SPECIFIC WEIGHING INSTRUCTIONS AND TOWING GUIDELINES INCLUDING AUXILIARY BRAKE REQUIREMENTS FOR ANY TOWED TRAILER OR TOWED VEHICLE.

Factory installed options do not include dealer installed after market equipment.

WARNING:DO NOT EXCEED THE GVWR, GCWR AND/OR GAWR AFTER LOADING YOUR MOTORHOME WITH WATER, FUEL, PASSENGERS AND CARGO. GAWR (Gross Axle Weight Rating) means the maximum permissible load weight a specific axle is designed to carry. See Federal Certification Label for disclosure of The GAWR for each axle.

(*1) Towing capacity is limited by GCWR; your vehicle's towing capacity is the difference between the GCWR and the actual vehicle weight; including all water, fuel, passengers, and cargo. Consult you Owner's Manual for further towing information.

(*2) Your motorhome's fresh water tank and water heater taken together determine the gross fresh water capacity. Your usable fresh water capacity, however, may be less.

(*3) Dealer installed equipment and towed vehicle tongue weight will reduce CCC.

EXAMPLE

The motorhome must be weighed fully loaded to obtain accurate scale readings and to determine the proper tire pressure. All slide rooms must be in the retracted position.

- Record the Front Axle **Gross Axle Weight Ratings (GAWR)** and divide it by two. Example: Front Axle **GAWR** as listed on the Vehicle Certification Label is 13,000 lbs. Using the chart, record 6,500 lbs. on Scale A and D, line 1.
- Weigh the driver side front corner (Scale A) and record weight on chart Scale A, line 2. Example: 5,000 lbs.
- Weigh the passenger side front corner (Scale D) and record weight on chart Scale D, line 2. Example: 4,000 lbs.
- Record the Rear Axle **Gross Axle Weight Ratings (GAWR)** and divide it by two. Example: Rear Axle **GAWR** as listed on the Vehicle Certification Label is 20,000 lbs. Using chart below, record 10,000 lbs. on Scale B and E, line 1.
- Weigh the driver side rear corner (Scale B) and record weight on chart Scale B, line 2. Example: 7,100 lbs.
- Weigh the passenger side rear corner (Scale E) and record weight on chart Scale E, line 2. Example: 6,900 lbs.

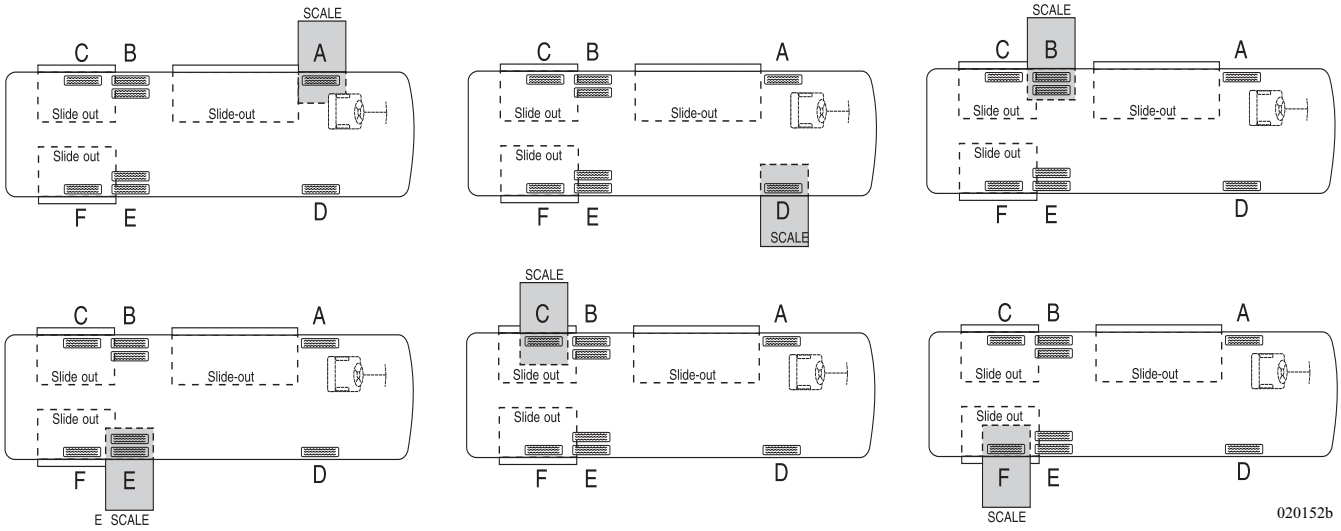

Six-point Weighing Example Chart

- Take the Tag Axle Gross Axle Weight Rating (**GAWR**) and divide it by two. Example: Tag axle **GAWR** taken from the Vehicle Certification Label is 10,000 lbs. Using the Six-Point Weighing Example Chart (on preceding page), record 5,000 lbs. on Scale C and F, line 1.
- Weigh the driver side rear corner (Scale C) and record weight on chart Scale C, line 2. Example: 4,500 lbs.
- Weigh the passenger side rear corner (Scale F) and record weight on chart Scale F, line 2. Example: 4,000 lbs.
- Add chart Scale C and F, lines 1, for the **Gross Axle Weight Rating (GAWR)** and record on chart under Totals. Example: 10,000 lbs.
- Add chart Scale C and F, line 2 for actual **Gross Axle Weight (GAW)** and record on chart under Totals. Example: 8,500 lbs.
- Actual **Gross Axle Weight (GAW)**. Example: 8,500 lbs., is not to exceed **Gross Axle Weight Rating (GAWR)**. Example: 10,000 lbs.
- If necessary, adjust the tag axle regulator to compensate for payload carried by the tag, drive and front axles.
- Perform the regulator stabilization procedure.

NOTE:
Adjustments made to the Tag Axle Regulator will require repeating the weighing procedures.

- If necessary, adjust the payload so the **GAWR** is not exceeded. Total combined weights must not exceed the **GVWR**.
- Refer to the Tire Chart in this section (the example tire size is 295/80R22.5). Use the highest actual weight, Scale A or D, line 2. Example 5,000 lbs.; Scale B or E, line 2. Example 7,100 lbs.; Scale C or F, line 2. Example 4,500 lbs. Determine the proper tire pressure for each axle. Front axle tire pressure would be 115 psi, Rear axle tire pressure would be 85 psi, and Tag axle tires would be 80 psi using the Load Inflation chart.

WARNING:
Improperly inflated or overloaded tires can cause a blowout. An overloaded axle can cause a component failure of the suspension system. Tire blowout or broken suspension components can lead to loss of vehicle control resulting in property damage, personal injury or death.

CAUTION:
If actual weight carried by any tire is below the tire chart weight specification minimum tire pressure the minimum inflation pressure must be maintained. Tire pressure below the minimum inflation pressure can overheat and damage the tire casing leading to premature tire failure or blowout.

	ROADSIDE		CURBSIDE		TOTAL AXLE WEIGHT	GROSS AXLE WEIGHT RATING GAWR	GAWR Minus Total Axle Weight
FRONT AXLE	1. 6,500	+	6,500	=	13,000		
	2.(A) 5,000		(D) 4,000		9,000	13,000	4,000
DRIVE AXLE	1. 10,000	+	10,000	=	20,000		
	2.(B) 7,100		(E) 6,900		+ 14,000	+ 20,000	6,000
TAG AXLE	1. 5,000	+	5,000	=	10,000		
	2.(C) 4,500		(F) 4,000		+ 8,500	+ 10,000	1,500
TAG AXLE REGULATOR	SETTING @ 24 psi		Total Axle Weight		= 31,500 UVW	= 43,000 GVWR	= 11,500 CCC

NOTE:
These measurements are with a full fuel tank and nobody in the motorhome.

020255d

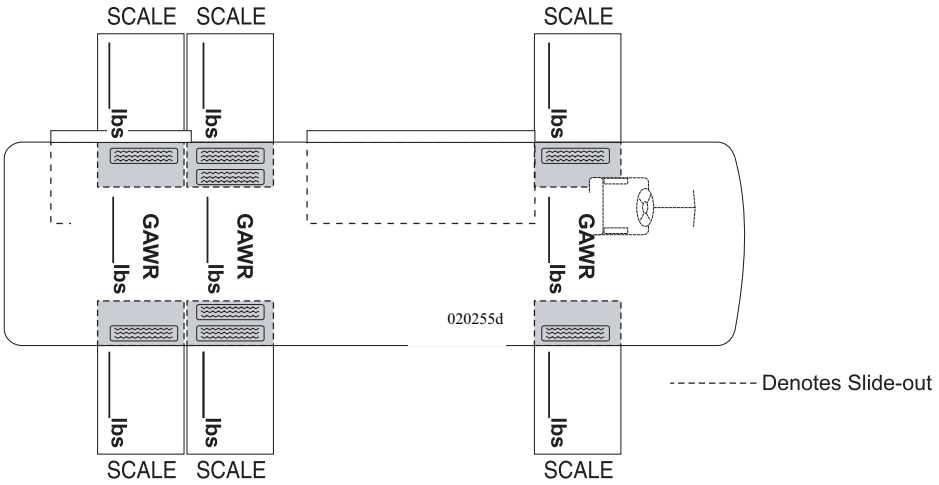

Cargo Carrying Capacity:

When weighing the motorhome it is important to understand that each motorhome, even of the same model year, floorplan and length will weigh different due to options and accessories. **The Gross Vehicle Weight Rating (GVWR), Gross Combination Weight Rating (GCWR) and/or Gross Axle Weight Rating (GAWR) must not be exceeded.**

GVWR of the vehicle limits the weight of the entire load combination, regardless of the water, LP-Gas, passengers and cargo weight.

It is important to understand that the weighing process is performed in two phases. First, by determining the **Cargo Carrying Capacity (CCC)**; and second, to ensure the **GVWR** is not exceeded when adjusting tire pressures. The weighing process should start by recording the **GVWR** from the Federal Weight Label, then weighing the motorhome unloaded, without passengers and with a full fuel tank. Engine and transmission fluid levels must be full. This is known as the **Unloaded Vehicle Weight (UVW)**. Once this weight has been recorded it can be subtracted from the **GVWR**.

GVWR 35,000 - UVW 20,000 = A 15,000

Next, begin to calculate the **Cargo Carrying Capacity (CCC)**.

Fresh water weight and LP-Gas weight can now be subtracted from the remaining total line A.

- Water weight is the number of gallons multiplied by 8.3.
- LP-Gas weight is the number of gallons multiplied by 4.2.

A 10-gallon water heater with a 40-gallon fresh tank would total 50 gallons times 8.3, or 415 pounds.
A 30-gallon LP-Gas tank will have 24 gallons of LP-Gas due to the 80% valve. This would mean 24 gallons multiplied by 4.2, or 100.8 pounds.

A 15,000 - 415 = B 14,585

B 14,585 - 100.8 = C 14,482.2

Next, calculate the **Sleep Capacity Weight Rating (SCWR)** the manufacturer's designated number of sleeping positions for the motorhome multiplied by 154 pounds.

The 154 pounds (70kg) is the average weight established by the US Federal Government and Transport Canada, and is used to arrive at **Cargo Carrying Capacity (CCC)**. However, actual sleep capacity weight may be greater. The SCWR is not intended to limit the sleeping capacity to a specified weight.

Example: If the manufacturer has designated the motorhome sleeping position at 4 (616 pounds) and there are four people who weight 200, 200, 178 and 138 pounds, totaling 716 pounds, that doesn't mean the sleeping capacity is reduced to three individuals, but rather the **CCC** is reduced by 100 pounds due to the actual passenger weight.

C 14,484.2 - SCWR 716 = CCC 13,768.2

Cargo Carrying Capacity (CCC) is how much cargo the motorhome can carry. However, tongue weight of a towed vehicle will further reduce this amount.

Now the motorhome can be fully loaded and weighed to ensure **GVWR** is not exceeded. Once the motorhome is fully loaded it is ready to be weighed to obtain an accurate scale reading and determine the proper tire pressure. All slide rooms must be in the retracted position when weighing the motorhome. The motorhome must remain as level as possible on the scale, even when an axle or side is not physically on the scale.

- Each wheel position must be weighed to accurately determine the weight carried at each wheel position.
- Refer to the previous examples on how to weigh each wheel position. Each wheel position weight must be weighed and recorded to determine proper tire inflation.
- Wheel position weights are not to exceed **Gross Axle Weight Rating (GAWR)** and **Gross Vehicle Weight Rating (GVWR)** as printed on the Motorhome Vehicle Certification Label.
- Compare wheel position weights with weight ratings on the label. If wheel position weights exceed maximum specifications, items will need to be removed until rating weight is within specification.

Cargo Carrying Capacity Flowchart

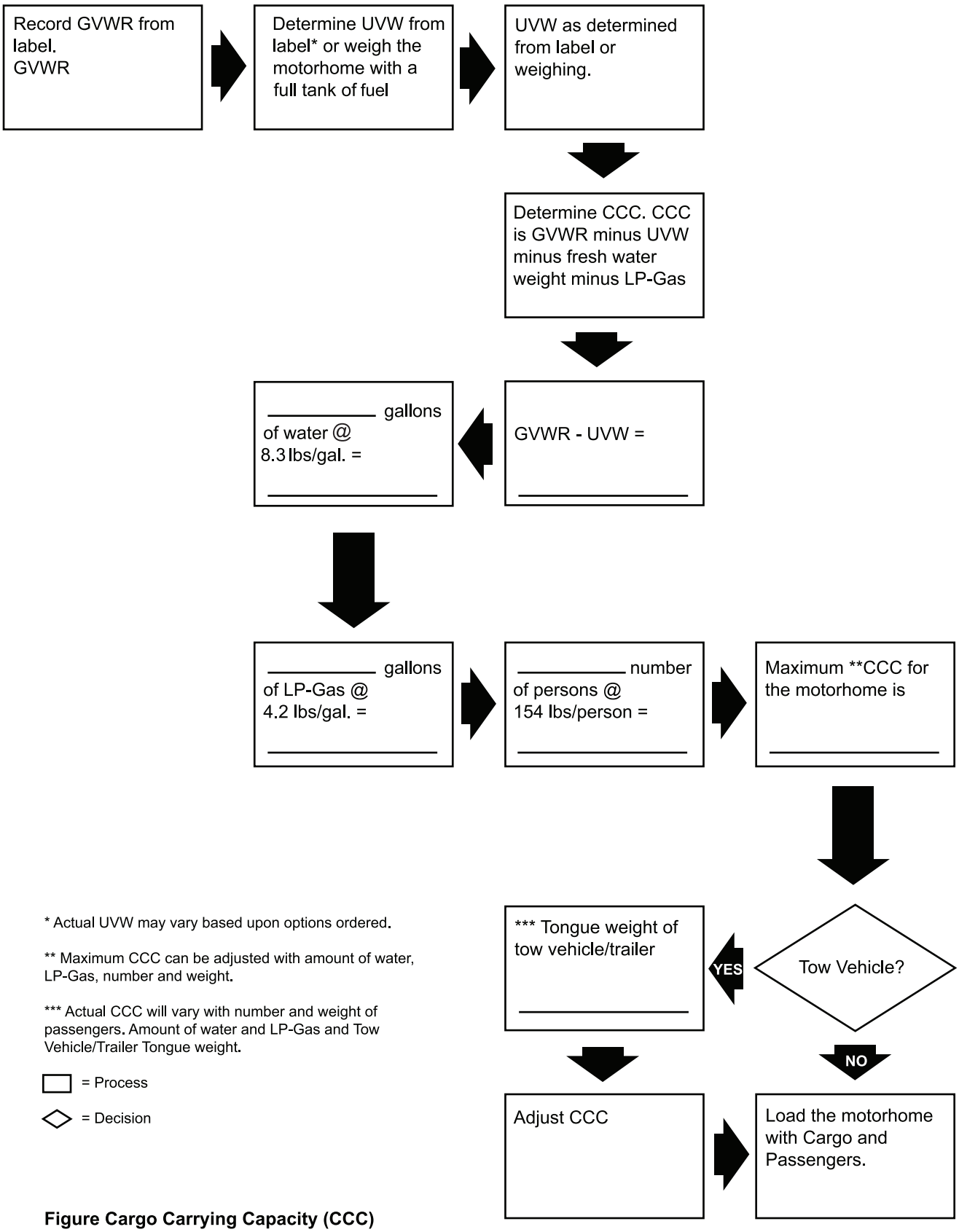

Figure Cargo Carrying Capacity (CCC)

Example Worksheet

	ROADSIDE		CURBSIDE		TOTAL AXLE WEIGHT	GROSS AXLE WEIGHT RATING GAWR	GAWR Minus Total Axle Weight
FRONT AXLE	1. 6,500	+	6,500	=	13,000		
	2.(A) 5,000		(D) 4,000		9,000	13,000	4,000
DRIVE AXLE	1. 10,000	+	10,000	=	20,000		
	2.(B) 7,100		(E) 6,900		+ 14,000	+ 20,000	6,000
TAG AXLE	1. 5,000	+	5,000	=	10,000		
	2.(C) 4,500		(F) 4,000		+ 8,500	+ 10,000	1,500
TAG AXLE REGULATOR	SETTING @ 24 psi		Total Axle Weight		= 31,500 UVW	= 43,000 GVWR	= 11,500 CCC

NOTE:
These measurements are with a full fuel tank and nobody in the motorhome.

	FORMULA	UVW 31,500 CAPACITY		CCC 11,500
FRESH WATER	Subtract Gallon @ 8.3 lbs/gal	100 X 8.3 = 830	-	10,670
WATER HEATER	Subtract Gallon @ 8.3 lbs/gal	10 X 8.3 = 83	-	10,587
LP-GAS	Subtract Gallon @ 4.2 lbs/gal	40 X 4.2 = 168	-	10,419
SLEEP CARRYING WEIGHT RATING	Subtract Persons @ 154 lbs/person	5 X 154 = 770	-	9,649
		Maximum Cargo Carrying Capacity CCC		9,649

Maximum Cargo Carrying Capacity will change by varying any of the capacities. Tongue Weight of a towed vehicle will reduce the Cargo Carrying Capacity (CCC).

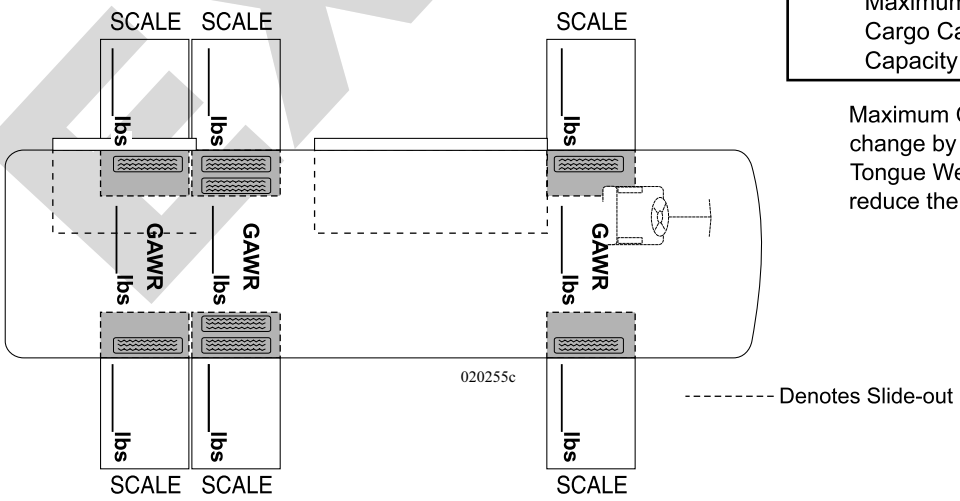

020255n

EXAMPLE

Actual Worksheet

	ROADSIDE		CURBSIDE		TOTAL AXLE WEIGHT	GROSS AXLE WEIGHT RATING GAWR	GAWR Minus Total Axle Weight
FRONT AXLE	1.	+		=			
	2.(A)		(D)				
DRIVE AXLE	1.	+		=			
	2.(B)		(E)		+	+	
TAG AXLE	1.	+		=			
	2.(C)		(F)		+	+	
TAG AXLE REGULATOR	SETTING @_____ psi		Total Axle Weight		= UVW	= GVWR	= CCC

NOTE:
These measurements are with a full fuel tank and nobody in the motorhome.

	FORMULA	UVW CAPACITY		CCC
FRESH WATER	Subtract Gallon @ 8.3 lbs/gal	X 8.3 =	-	
WATER HEATER	Subtract Gallon @ 8.3 lbs/gal	X 8.3 =	-	
LP-GAS	Subtract Gallon @ 4.2 lbs/gal	X 4.2 =	-	
SLEEP CARRYING WEIGHT RATING	Subtract Persons @ 154 lbs/person	X 154 =	-	
		Maximum Cargo Carrying Capacity CCC		

Maximum Cargo Carrying Capacity will change by varying any of the capacities. Tongue Weight of a towed vehicle will reduce the Cargo Carrying Capacity (CCC).

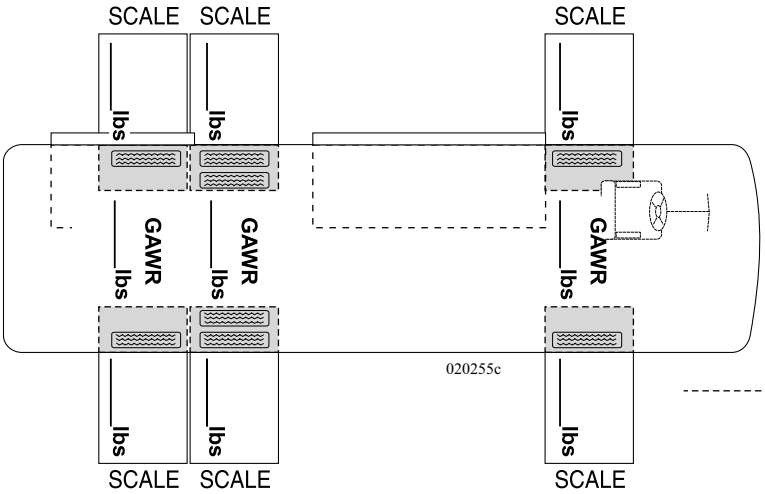

--------- Denotes Slide-out

020255c

Weight Record Sheet

DATE: _____

PLACE: _____

FRONT: _____ + _____ = _____
LEFT RIGHT TOTAL

REAR: _____ + _____ = _____
LEFT RIGHT TOTAL

TAG: _____ + _____ = _____
LEFT RIGHT TOTAL

= _____
TOTAL GROSS VEHICLE WEIGHT

DATE: _____

PLACE: _____

FRONT: _____ + _____ = _____
LEFT RIGHT TOTAL

REAR: _____ + _____ = _____
LEFT RIGHT TOTAL

TAG: _____ + _____ = _____
LEFT RIGHT TOTAL

= _____
TOTAL GROSS VEHICLE WEIGHT

DATE: _____

PLACE: _____

FRONT: _____ + _____ = _____
LEFT RIGHT TOTAL

REAR: _____ + _____ = _____
LEFT RIGHT TOTAL

TAG: _____ + _____ = _____
LEFT RIGHT TOTAL

= _____
TOTAL GROSS VEHICLE WEIGHT

DATE: _____

PLACE: _____

FRONT: _____ + _____ = _____
LEFT RIGHT TOTAL

REAR: _____ + _____ = _____
LEFT RIGHT TOTAL

TAG: _____ + _____ = _____
LEFT RIGHT TOTAL

= _____
TOTAL GROSS VEHICLE WEIGHT

DATE: _____

PLACE: _____

FRONT: _____ + _____ = _____
LEFT RIGHT TOTAL

REAR: _____ + _____ = _____
LEFT RIGHT TOTAL

TAG: _____ + _____ = _____
LEFT RIGHT TOTAL

= _____
TOTAL GROSS VEHICLE WEIGHT

DATE: _____

PLACE: _____

FRONT: _____ + _____ = _____
LEFT RIGHT TOTAL

REAR: _____ + _____ = _____
LEFT RIGHT TOTAL

TAG: _____ + _____ = _____
LEFT RIGHT TOTAL

= _____
TOTAL GROSS VEHICLE WEIGHT

020262

VIEWS
Front

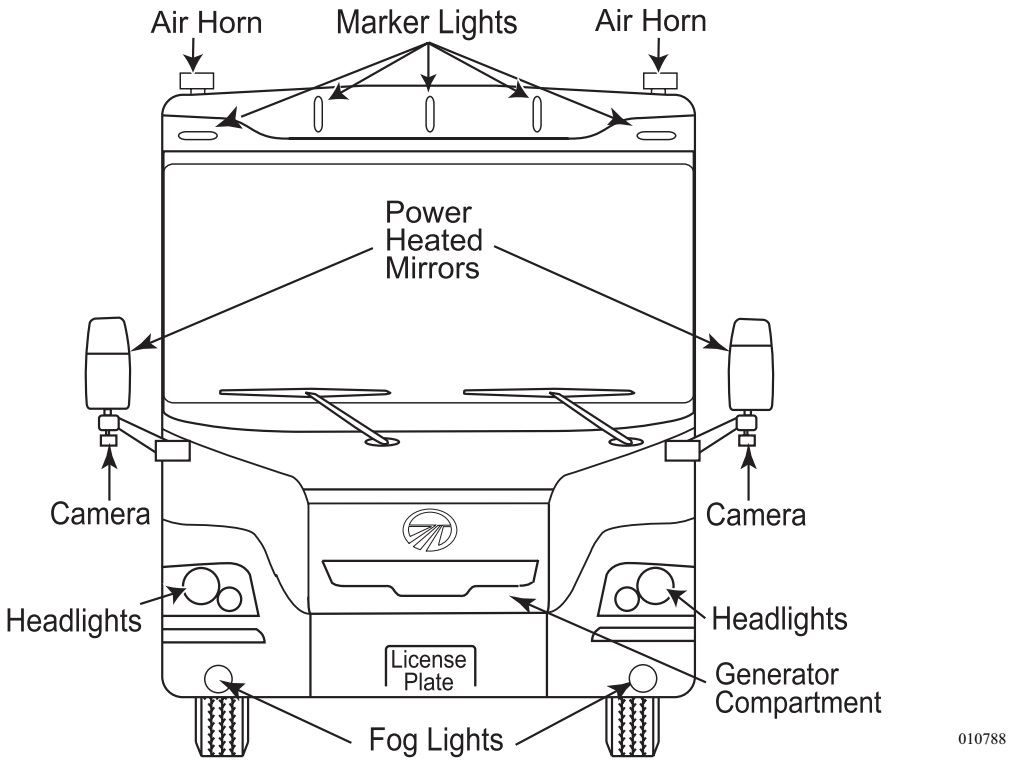

Rear

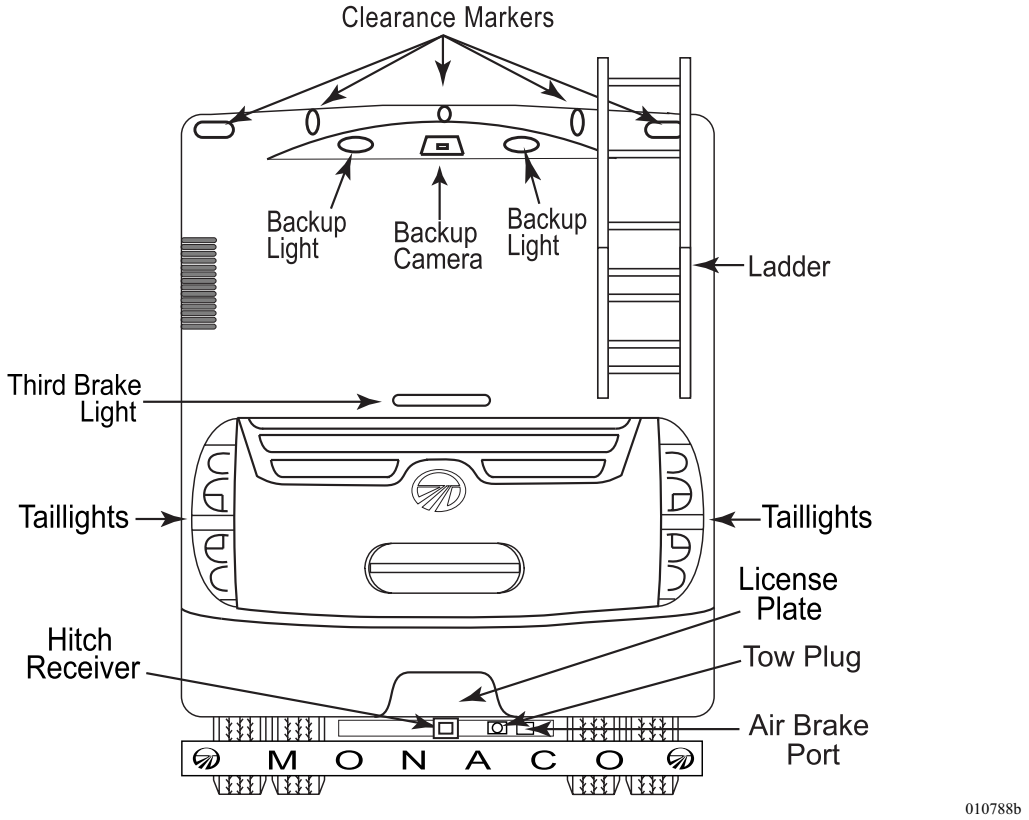

Roadside

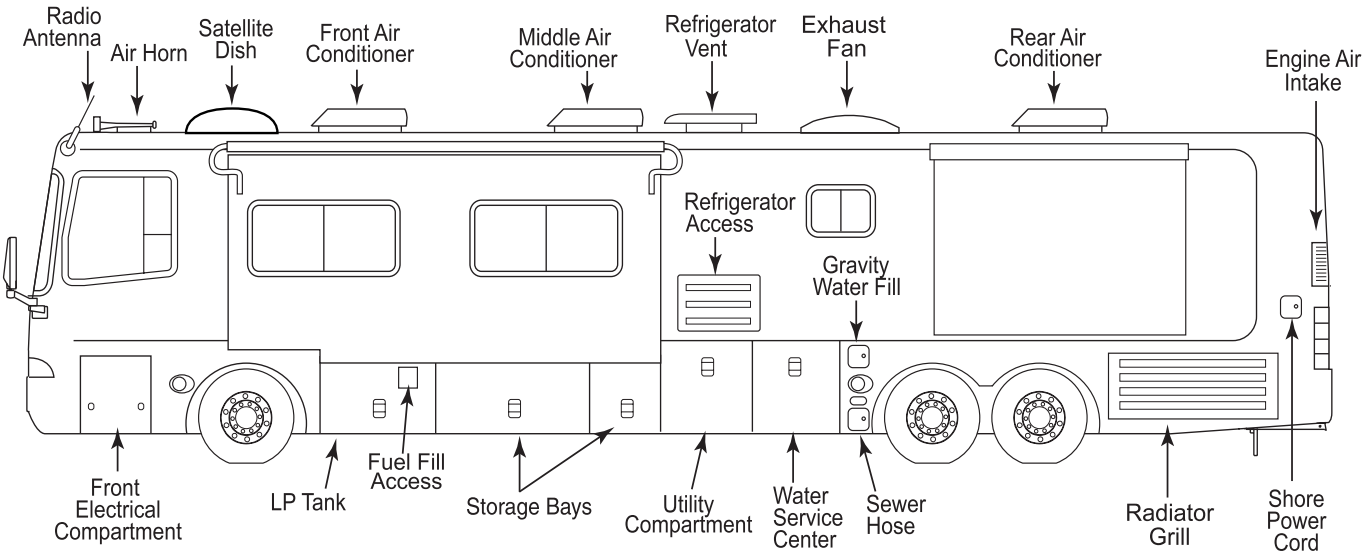

010761b

Curbside

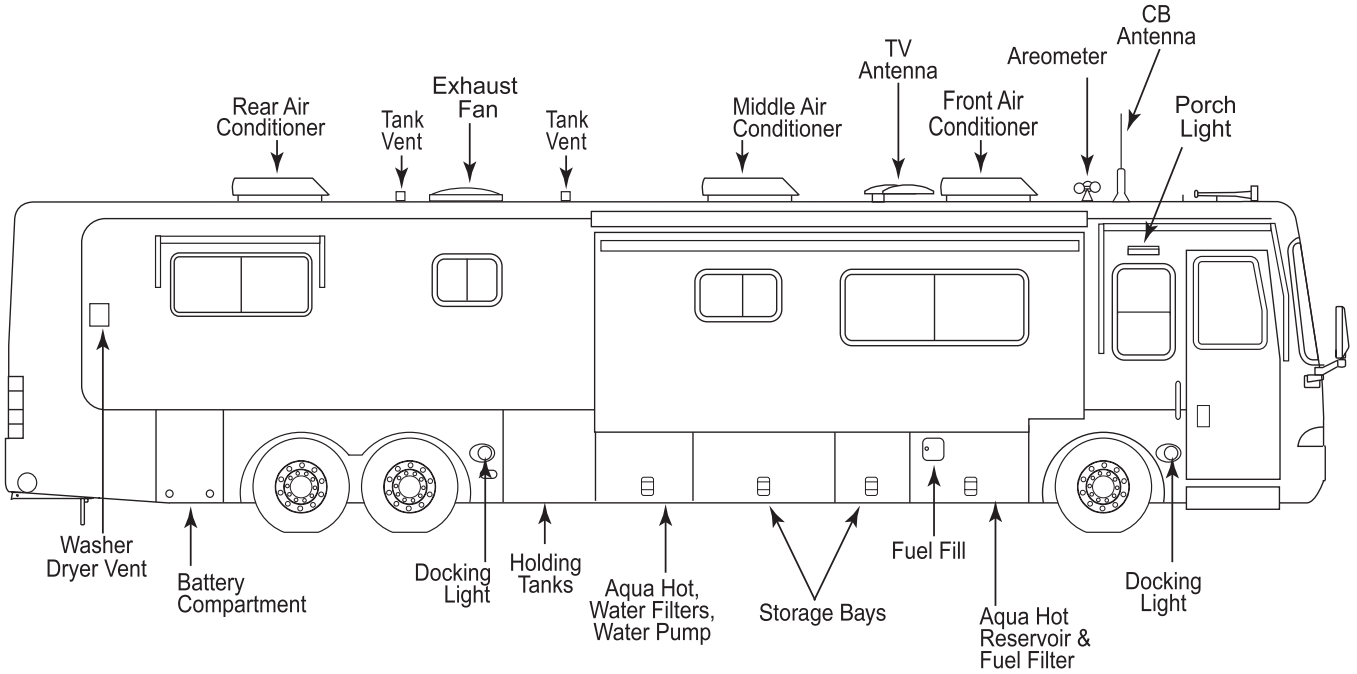

010760

SECURITY SYSTEM (Optional)

The "Viper" security system is designed to provide years of trouble-free operation. To maintain reliable operation, the battery in the remote must be changed once a year. If the remote battery is weak, the range of the remote will decrease and the remote LED indicator will dim. The two remote transmitters (key fobs) are programmed to the receiver using a computer based "Learn Routine." The learn routine will dictate how the system operates. The Standard transmitter configuration is set at installation. An authorized dealer can customize the transmitter configuration.

Key Fob Configuration:

Aux Button - Controls the silent mode function and bay door locks.

Lock Button - Controls the arming function.

Green LED - Indicates power at the Key Fob.

Unlock Button - Controls the disarming function.

Horn Button - Controls the panic function.

Key Fob

To Arm the System:

• Press the **LOCK** button on the transmitter remote for one second.

The system will "chirp" once. The parking lights flash once. The entry door and selected bay doors will lock. The LED system status light flashes once per second indicating the system is armed and functioning properly.

If the system chirps once after it has locked the doors, this is a "Bypass Notification." The system is armed; however, one or more system zones are "open." The LED will flash in groups that indicate which system zones are open.

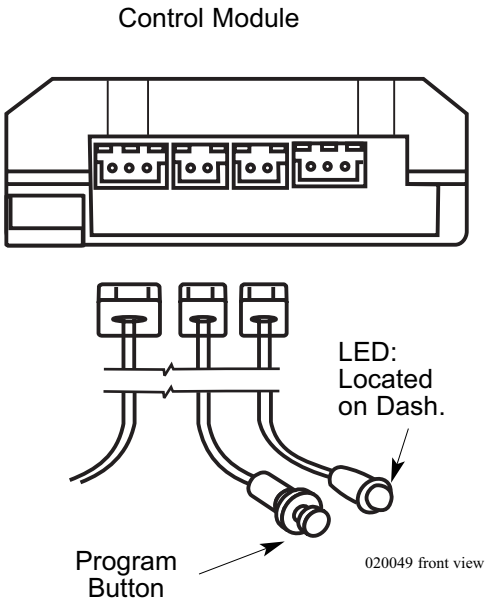

Valet/Program button & LED status light.

When Armed:

- The system will use a "Warn Away" chirp signal. A light impact will cause the siren to chirp.
- A continuous light impact or a heavy impact will sound the alarm.
- Opening the entry door, selected bay doors or a bedroom window will cause the siren to chirp for three seconds, followed by a continuous alarm.

Disarming:

- Press the **UNLOCK** button on the Key Fob remote for one second. The parking lights flash twice and the alarm chirps twice. The entry door unlocks. When the system chirps four or five times during disarming, the red LED will blink the code for a zone that has been tampered with.

House Battery Cut-off:

- Battery Cut-off can be turned on or off from the Key Fob by simultaneously pressing the lock and unlock buttons. This will turn the battery cut-off on or off.

Lock & Unlock simultaneously = Turns house power On/Off

Press AUX for 3 seconds= Unlock bay doors

020249

Panic Mode:

Press the **HORN** button for one second. The siren will sound and the parking lights will flash for the programmed duration. The Panic Mode can be exited at any time by pressing the **HORN** button again.

Silent Mode:

Prior to arming or disarming the system, the confirmation chirp(s) can be temporarily turned **OFF**. Press the **AUX** button for less than one second prior to arming or disarming the system. The system will either arm or disarm silently. The chirp will be silenced only once each arm or disarm cycle.

Press and hold the **AUX** button for three seconds to unlock the bay doors. The entry door will remain locked.

NOTE:
A "Warn Away" chirp will not sound when the system is armed in Silent Mode. A heavy impact or opening the entry door will sound a continuous alarm.

Sound and Window Sensors:

Two sound sensors are used to detect impact noises (repetitive or single heavy impact) and glass breakage. Sound sensors are located in the galley and in the bedroom. Window sensors are located on the bedroom windows only. These sensors detect window screen movement. If the screen is opened more than ½ inch, the alarm will sound if the security system is activated.

Each sensor is equipped with a pair of replaceable batteries. Test sound and window sensors monthly for proper operation.

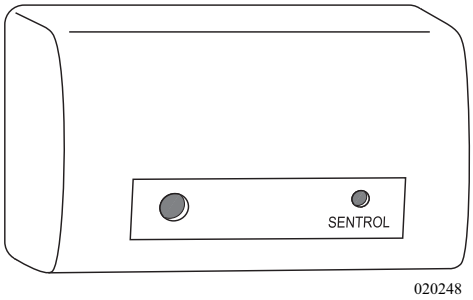

Sound Sensor.

To Test Sound Sensor:

- Clap hands loudly next to sensor. LED should briefly illuminate twice.

To Test Window Sensor:

- Momentarily press on housing next to LED to briefly illuminate.

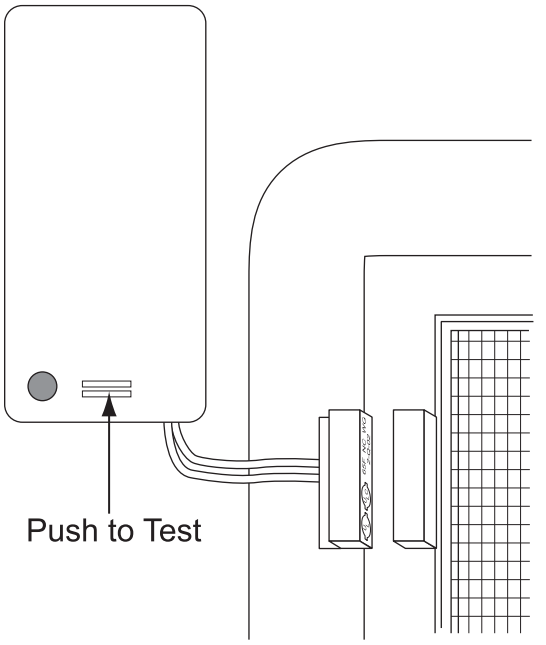

Window Sensor

Valet Mode:

This feature is useful in servicing, washing or storing the vehicle. The **Valet Mode** will not allow the system to sound an alarm. While in **Valet Mode** the Key Fob will lock and unlock the doors. The LED status light is a solid glow in the **Valet Mode**. There are two ways to access the **Valet Mode**: With the **Key Fob** or the **Valet/Program** button.

Entering Valet Mode with Key Fob:

1. Open the entry door.
2. Press the **LOCK** button.
3. Press the **UNLOCK** button.
4. Press the **LOCK** button again.
5. Ensure the LED is a steady glow.

Entering Valet Mode with Valet/Program Button:

1. Turn the ignition **ON**.
2. Turn the ignition **OFF**.
3. Access Valet/Program button on main dash panel near ignition. Press and hold the **Valet/Program** button ten seconds and release.
4. Ensure the LED is a steady glow.

Multi-Level Security Arming:

This feature applies to one arming cycle only. The selection of active or bypassed sensor inputs can be set when arming. Press the **LOCK** button within five seconds after arming. Each time the **LOCK** button is pressed additional zones are bypassed. Reset the system to monitor all zones by turning the ignition key on.

NOTE:
Press the lock repeatedly to bypass Zones. The system will appear to be non-functional. Reset the Zones using the ignition.

Table of Zones:

- Zone One is Pin Switches.
- Zone Two is Warn Away.
- Zone Three is Entry Door.
- Zone Four is Bay Doors.
- Zone Five is Ignition.

Quick Reference Guide:

- **LOCK** - Arms or activates the system.
- **UNLOCK** - Disarms or deactivates the system.
- **LOCK** - While driving will arm the system.
- Ignition **ON** and the **Valet** button pressed disarms without the Key Fob.
- Ignition **ON**, then **OFF**, then pressing the **Valet** button for ten seconds, enters or exits the **Valet Mode**.
- Press and hold the **HORN** button for one second to enter **Panic Mode**.
- Press the **HORN** button to exit the **Panic Mode**.
- Press the **AUX** button for **Silent Mode** Activation.
- **LOCK** and **UNLOCK** simultaneously turns Battery Cut-off on and off.
- Hold **AUX** down for three seconds to unlock bay doors.

Tips:

- Remember the location of the Valet/Program button.
- Know the number of Valet/Program button pulses for disarming.
- A 24 hour support number is located on the back of the Key Fob.
- The headlights will only flash when using the Key Fob.
- The range of the remote Key Fob is approximately 1,200 feet.

Troubleshooting:

- Valet/Program is not responding - Ensure the button is plugged into the blue port of the receiver.
- Red Status LED does not work - Ensure the LED is plugged into the correct socket.
- Shock Sensor will not trigger alarm - Ensure the Nuisance Prevention Circuitry system has not triggered.
- System has no power - Ensure the 15 Amp fuse (front run panel) is not blown.
- System is not responding to remote - Ensure the Valet mode is not entered.

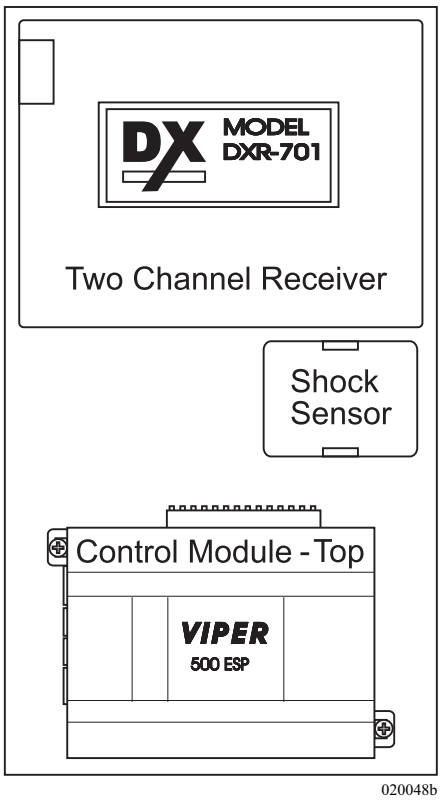

Viper Assembly Panel:
Located under the Dash Pod.

Changing the Programming - Entering the Learn Routine:

The following information is provided for changing the programming features and should only be used by an authorized service center.

1. Open the door.
2. Turn ignition ON, then OFF.
3. For menu selection: Press and hold the Valet/Program button.
4. Select a feature.
5. Program a feature.
6. Release the Valet/Program button.

When the feature is programmed:

- Other features can be programmed within the same menu.
- Another menu can be accessed.
- The learn routine can be exited.

To access another feature in the same menu:

- Press the **Valet/Program** button the number of times necessary to advance to the desired feature.
- Press the **Valet/Program** button and **HOLD**.

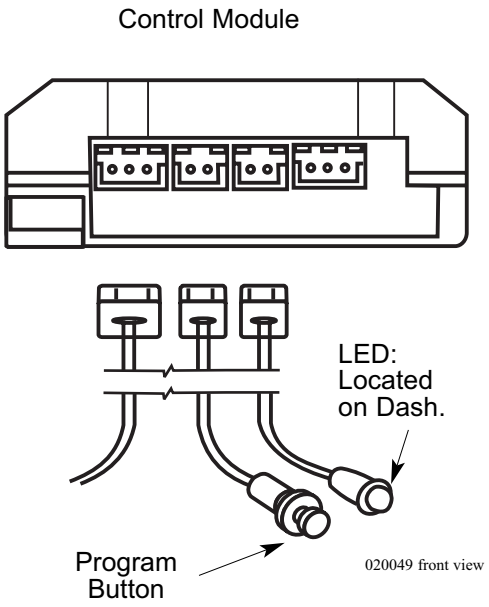

Valet/Program button & LED status light.

Selecting another menu:
• Press and hold the **Valet/Program** button.
• The system will advance. Chirp is audible to access menu after three seconds.

Exiting the Learn Routine:
This can be done in one of four ways:
1. Close the door.
2. Switch ignition ON.
3. Do not respond for longer than 15 seconds.
4. Press the **Valet/Program** button an excessive number of times.

System Feature Menu:
The system features are broken into two separate menus that can be accessed for customization by an authorized dealer.

NOTE:
***Bold indicates the factory default settings.**

Basic Features - Menu One:
Active/Passive Arming: Select ***ACTIVE**. When active arming is selected, the system will only arm with the Key Fob. Passive arming allows automatic arming after the door is closed.

Chirp ON/OFF: Select ***Chirp ON**. Allows control of the chirp which confirms arming or disarming.

Ignition Controlled Door Locks ON/OFF: Select ***ON**. When turned on the doors will lock three seconds after the ignition is turned ON and unlock when the ignition is turned OFF.

Active/Passive Locking: *Active selected. Active locking means the doors will not lock when the system is passively armed. Passive locking means the doors will lock when the system is passively armed.

Panic with the Ignition ON: Turned ***OFF**. Many states prohibit a siren from sounding in a moving vehicle. This feature is designed to comply with those laws and regulations.

Door Lock Pulse Duration: *.8

Forced Passive Arming ON/OFF: Forced Passive Arming ***OFF**. Forced Passive Arming will occur one hour after the ignition is turned OFF. Engaging this feature will force passive arming, even if a zone is left open or invalid.

Automatic Engine Disable (AED) ON/OFF: *Not wired.

Armed While Driving/Vehicle Recovery System (VRS): Turned ***OFF**.

Code Hopping ON/OFF: Turn ***ON**. This enables a mathematical formula to change the code each time the Key Fob and receiver communicate.

Advance Features - Menu Two:
Siren/Horn Honk: *Continuous.

Siren Duration 30/60 Seconds: *180 seconds.

Nuisance Prevention Circuitry (NPC) ON/OFF: With ***OFF** selected. This enables the system to indefinitely respond to repeated triggers on the sensor inputs. When a zone triggers three times in one hour, it may be necessary to switch to ON to bypass that zone for one hour. That time period will determine if that zone can trigger the system. If that zone triggers in the hour it will reset the one hour timer. If that zone does not trigger in the hour, the zone will become active and allow the system to trigger again.

Progressive Door Trigger ON/OFF: *ON.

Valet Pulse Count 1 to 5 Pulses: *ONE. This is the number of times the Valet/Program button must be pressed before disarming the system.

Door Trigger Error Chirp ON/OFF: *ON.

Ignition Controlled Dome light Supervision ON/OFF: *Not wired.

Double Pulse Unlock ON/OFF: *OFF.

Channel 3 Validity/Latched: Latched Rest with Ignition/30 Second.

Timed/Second Unlock Output: *ON AUX Channel 3.

NOTE:
***Bold indicates the factory default settings.**

The system uses four cameras - below the front overhead, on the exterior rear, and one camera on each rearview mirror. A Video Select feature on the Aladdin ™ is used to alternate between camera views. When a turn signal is activated, the system will automatically change from the current view to the direction of that turn signal. When the turn signal is cancelled, the system will switch back to the previous view. Cameras may also be viewed through the bedroom LCD monitor. Rear surveillance can be utilized while driving, or when the motorhome is parked.

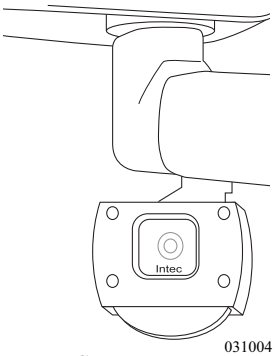

031004

Camera

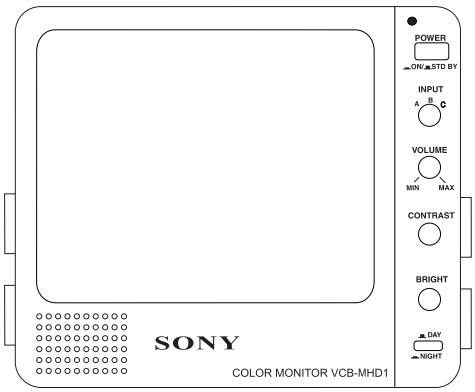

Front Monitor 060103c

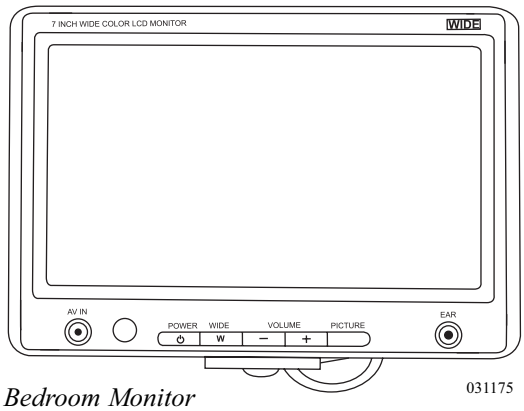

Bedroom Monitor 031175

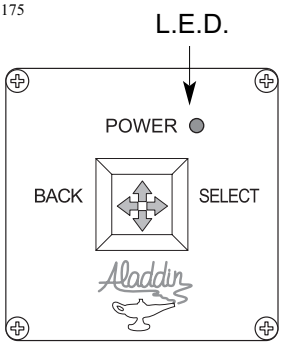

Aladdin Joystick 080377d

To Use the System While Driving:

- Use the battery cut-off switch to engage interior house power.
- Press the power button on the Sony monitor.
- Use the Aladdin joystick to alternate between the four cameras.
- When a turn signal is activated, the system will automatically change from the current view to the direction of that turn signal. When the turn signal is cancelled, the system will switch back to the previous view.

To Use the System When Parked:

A LCD monitor is located in the bedroom. The rear monitor uses the Aladdin joystick, mounted near the bedroom monitor, to toggle between cameras.

- Use the battery cut-off switch to turn on interior house power.
- Press the power button on the Sony monitor. Use the Panasonic remote to turn the bedroom monitor on.
- Use the Panasonic remote to adjust view and brightness.
- Change camera views using one of the three Aladdin joysticks located either at the driver's armrest, in the galley or on the bedroom wall.

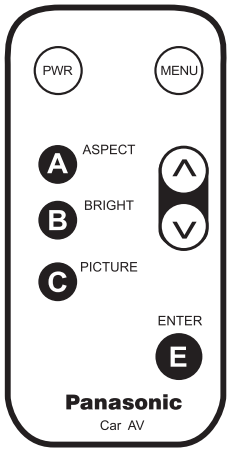

Panasonic Remote 020245b

<u>NOTE:</u>
Monitors will remain in standby mode when turned off.

SAFE (Optional)

The motorhome uses a small, sturdy floor safe for protection of important documents, semi-precious valuables and petty cash. The safe location will vary with the different floorplans. Consult with the dealership about the safe location.

The precise internal lock mechanism, over time and use, will require cleaning, lubricating and adjustments. Duplicate and/or Replacement keys can be obtained by contacting ***Allied Safe*** at 1-800-448-8338, or website *alliedsafe.com*.

SMOKE DETECTOR

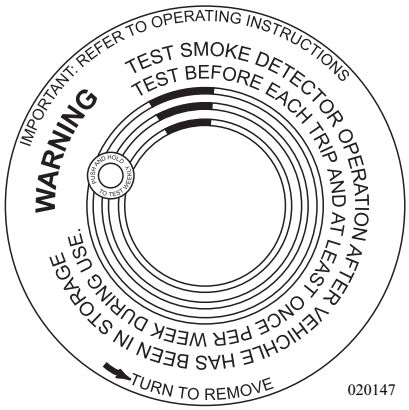

Statistics show that most fire casualties are not caused by direct flame, but by less visible smoke (products of combustion). The smoke detector responds to both visible and invisible products of combustion. The smoke detector will automatically return from alarm to normal state when the reason for activation, the presence of smoke, is completely removed. Fires are commonly caused by smoking in bed, leaving children unattended or using flammable cleaning fluids. Please be safety conscious and avoid unnecessary risk.

WARNING:
There is no way to insure against injury or loss of life in a fire; however, the smoke detector is intended to help reduce the risk of tragedy. Additional smoke detectors may help to reduce the risk. Proper use and care of the smoke detector could save lives.

Operation

When a 9 Volt DC battery is correctly connected, the smoke alarm is operating. The L.E.D. will flash every minute showing the battery is supplying power. A load alarm will sound when a production of combustion is sensed.

NOTE:
The unit will not operate without a battery. A battery flag will pop up preventing the unit from being installed to the mounting bracket without a battery. Carbon zinc batteries average a service life of one year. Alkaline batteries average a service life of one to two years.

Testing

Simply press the test button on the smoke alarm cover for approximately three seconds. The alarm will sound if all electronic circuitry, horn and battery are working properly. The smoke alarm should be tested at least once a week when the motorhome is in use, prior to each trip and when the motorhome has been in storage. When testing the smoke alarm it is advised to stand at arm's length.

CAUTION:
Never use an open flame to test the smoke alarm. You may ignite and set fire to the alarm and to the motorhome.

Maintenance

There are some simple steps to perform in order to keep the smoke alarm working properly:

- Test the smoke alarm once a week.
- Keep a supply of 9 Volt DC batteries on hand.
- Vacuum the slots in the cover and sides with a soft brush attachment every month. Test the smoke alarm once the unit has been vacuumed.
- The smoke alarm will beep once a minute when a low battery condition exists to signify battery must be immediately replaced.

Troubleshooting

If the alarm does not sound when the test button is pushed, or with a smoke test, try the following:

- **Inspect** for obvious damage.
- Check for the recommended battery type.
- Check the battery for proper connection or replace the battery if needed.
- Gently vacuum as recommended.

If these procedures do not correct the problem, do not attempt repairs. If the smoke alarm is within the warranty period and the terms indicate the nature of the problem, return the unit to your dealer. Smoke detectors beyond the warranty period cannot be economically repaired.

CARBON MONOXIDE DETECTOR

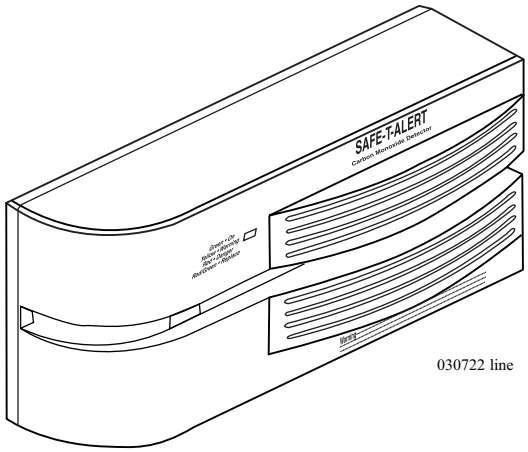

American National Standards Institute **(ANSI) A119.2 - Fire & Life Safety 3-4.6 Carbon Monoxide Detectors** states *"All RVs equipped with an internal combustion engine or designed with features to accommodate future installation of an internal combustion engine and truck campers shall be equipped with a listed CO detector installed in accordance with its listing."*

The motorhome is equipped with a Carbon Monoxide detector. Everyone is at risk with Carbon Monoxide poisoning. Carbon Monoxide (CO) is a colorless, odorless and tasteless gas that binds with hemoglobin reducing the body's ability to absorb and carry oxygen to vital organs. Even low levels of CO have been known to cause brain and other vital organ damage in unborn infants, with no effect on the mother.

When removed from exposure, the symptoms dissipate as Carbon Monoxide is expelled through the lungs. Level of contamination in the body reduces at half-life increments at approximately four-hour intervals. Treatment with Oxygen will quicken recovery time.

In cases of mild exposure, the symptoms may include: a slight headache, nausea, vomiting and fatigue. Some consider this a "Flu-like Symptom." Symptoms for medium exposure may include a severe throbbing headache, drowsiness, confusion and fast heart rate. Extreme exposure can result in unconsciousness, convulsions, cardio-respiratory failure and death. Young children and household pets may be the first affected. Other highly sensitive people would include the elderly and people with lung or heart disease or anemia.

The CO detector is designed to detect the toxic CO Gas resulting from incomplete combustion of any fuel. This can be gasoline, propane, natural gas, oil, charcoal or wood. Anything that burns fuel such as engines, generators, furnaces, gas stoves or water heaters, produce CO Gas. Consequently, it is uncommon for household smoke from cigarettes or normal cooking to cause the alarm to sound.

CAUTION:
Activation of this device indicates the presence of Carbon Monoxide (CO), which can be fatal. A concentration of above 100 PPM will cause a warning condition. Individuals with medical problems may consider using detection devices with lower Carbon Monoxide alarming capabilities. Prolonged exposure to the horn at a close distance may be harmful to hearing.

The CO detector is wired to both the house and chassis batteries to allow reliable and continuous protection by alerting the build up of potentially dangerous levels of CO. Once the unit is powered, it will run through a brief warm-up and self check prior to monitoring for CO gas. There are no switches that can accidentally turn the system off.

WARNING:
If there is constant beeping and the red light is flashing, CO gas has been detected. Shut off appliances, coach engine, and water heater. Evacuate the coach and call the fire department. Have any problems corrected before restarting any appliances or the coach.

Operation

The detector is equipped with a self-cleaning CO sensor and requires a ten minute initial warm-up period to clean the sensor element and achieve stabilization. During the warm-up period, the **green** power light will flash **ON** and **OFF**. The **green** power light should be lit when the power is on. If the light is not lit, turn off the power and check all wire connections. If the power is on and the connections are correct, but the indicator still does not light, the detector should be returned for service. **Do not attempt to fix the detector.**

The indicator light displays a specific color to monitor along with a matching sound pattern.

Indicator Lights and Sound Patterns:

- **ON** or normal condition is indicated by **green**. The CO detector has power and is sensing air for the presence of CO Gas. The alarm horn will not sound.
- Flashing **red** indicates low CO alarm condition along with **four** beeps then **OFF** for five seconds. The alarm horn will sound and can be reset by the **TEST/RESET** button. The CO detector has detected the presence of 70 ppm.
- Steady **red** indicates a **CO ALARM** condition. The detector has sensed the presence of levels over 100 ppm of Carbon Monoxide. The alarm horn will sound continuously until the **RESET** switch is reset.
- Alternating **red** and **green** indicates a malfunction alarm.

Alarm

When the alarm sounds have the detector and the motorhome checked by an authorized service technician as soon as possible. Never disconnect a CO detector to silence an annoying alarm. Evacuate the motorhome immediately when the **red** light is lit and the alarm sounds. Do a head count to check that all persons are accounted for. Call the nearest fire department and ask them to determine the source of the Carbon Monoxide. Do not re-enter the motorhome until it has been aired out and the problem corrected.

Potential Sources of CO when operating the motorhome:

- Engine Exhaust
- Portable Space Heaters
- Gas Stoves and Ovens
- Defective Engine Exhaust System
- Nearby Motorhomes
- Portable Grills
- Camp Fires
- Generator Exhaust
- Portable Generators

Testing

Test Procedures:

Test the Carbon Monoxide detector operation after the motorhome has been in storage, before each trip and at least once a week during use. Test the alarm by holding the **TEST/RESET** button in until the alarm sounds. The alarm will sound four beeps and the indicator lamp goes steady **red**. Six seconds later the alarm will again beep four times and the indicator light goes steady **green**.

Peak Level Memory:

The CO detector has the capability to remember the level of Carbon Monoxide that activated the alarm. Press the **TEST/RESET** button for less than one second and observe the visual and audible signals.

- One beep and a **green** flash indicate memory is clear.
- Two beeps and two **red** flashes indicate less than 100 ppm.
- Three beeps and three **red** flashes indicate less than 200 ppm.
- Four beeps and four **red** flashes indicate greater than 200 ppm.

NOTE:
Memory is erased when power is disconnected for 15 seconds.

Use a vacuum cleaner to remove dust or any other buildup on the detector. Do not wash. Wipe the detector with a damp cloth and dry with a towel. Do not open the detector for cleaning. Do not paint the detector. It is recommend that the Carbon Monoxide detector be replaced every 10 years.

The CO detector has **NO** user service parts. If there is a problem with the detector refer to an authorized service center. **DO NOT REMOVE POWER**.

INSPECT:
Check the CO detector weekly and at the beginning and end of each trip.

FIRE EXTINGUISHER

The fire extinguisher in the motorhome is located near the main entrance door. Please read the operating instructions that are printed on the fire extinguisher. If there is any doubt on how to operate the fire extinguisher practice using it. Be sure to replace or recharge the extinguisher immediately after use.

Inspect the fire extinguisher at least once a month. Do so more frequently if the extinguisher is exposed to weather or possible tampering. Do not test the extinguisher by partially discharging. Internal pressure will escape and the fire extinguisher will need to be replaced.

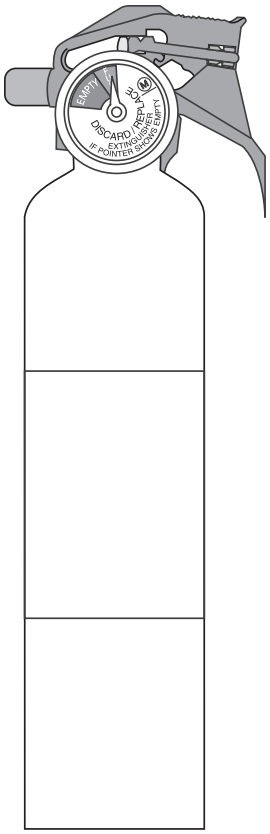

020073

Use the PASS word!

Pull the pin to unlock the extinguisher.

Aim at the base (bottom) of the fire and stand 6 to 10 feet away.

Squeeze the lever to discharge the agent.

Sweep the spray from left to right until totally extinguished.

WARNING:
Road vibration will cause extinguisher powder to compact and may cause extinguisher malfunction. Invert and shake extinguisher monthly.

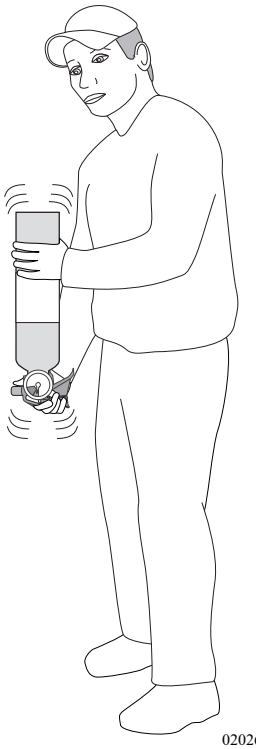

020261

There are three classes of fire to be concerned with in a motorhome. Any fire can fall into more than one class; a fire that involves both burning paper and kitchen grease would be a Class AB fire.

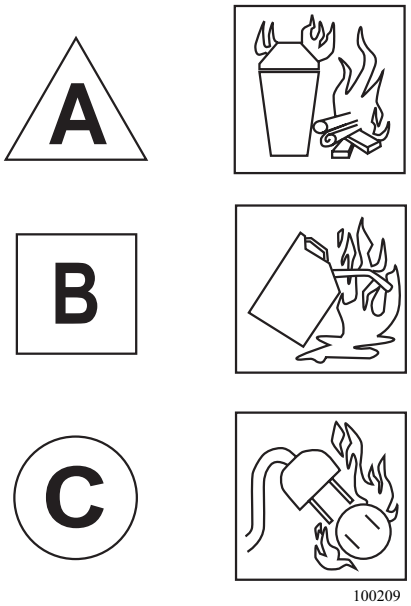

Classes of Fire:

A - Fires that are fueled by materials that leave a residue when they burn: paper, wood, cloth, rubber, and certain plastics.

B - Fires that involve flammable liquids and gases: gasoline, paint thinner, kitchen grease, propane and acetylene.

C - Fires that involve energized electrical wiring or equipment. If electricity to the equipment is turned off, a class C fire becomes one of the other two class fires.

ESCAPE (EGRESS) WINDOW

The Egress window, designated for use as an emergency exit, is identified inside of the motorhome by a red locking handle and Exit label. To open, lift the red handle and push outward. Pull closed and lower handles to lock the Egress window.

Hinges along the outside window top identify the Egress window on the motorhome exterior. The glass slider in the Egress window operates the same as all other windows in the motorhome. Occasionally open and close the Egress window to prevent the rubber seal from sticking.

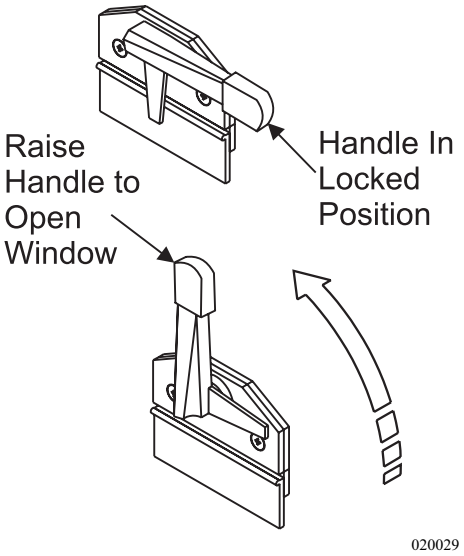

Egress Window Handle

~ NOTES ~

~ NOTES ~

Signature 2005

Exterior & Interior Care • Section 3

EXTERIOR CARE **119**
Corrosion 119
Washing 119
Drying 120
Waxing 120
Paint Codes 121
Tire Care 122
Wheels - Coated Aluminum 122
Bright Metal 123
EXTERIOR MAINTENANCE **124**
Fiberglass 124
Roof Care & Seal Inspections 124
INTERIOR CARE **126**
Cockpit 126
FABRICS **126**
Fabric Cleaning Codes 127
Fabric Specifications Charts 128
Fabric Specifications Charts - Ralph Lauren 131
Vinyl 133
Leather 136
Sensuede 136
FLOORS **137**
Carpet Cleaning Guide 137
Tile Floors 138
Laminate Floor (Opt.) 139
SHOWER **140**
CEILING **140**
WALL COVERINGS **141**
WOOD CARE **142**
COUNTERTOPS **144**
Solid Surface 144
STAINLESS STEEL SURFACES **145**
WINDOWS **145**
Condensation 145
WINDOW TREATMENTS **146**
Mini-blinds 146
Day/Night Shades 146
MOLD & MILDEW **147**
PEST CONTROL **149**
STORAGE **152**
Short Term 152
Long Term 153
Winter Storage Checklist 155
Removal from Storage 156

Corrosion

The most common cause of corrosion to the motorhome exterior is accumulation of road salts, grime and dirt. These elements, combined with moisture, may possibly cause early component failure. The undercarriage, around wheel openings and the radiator charge air cooler package require periodic cleaning to prevent component failure caused from corrosive materials collected from roadways. If the motorhome is driven in areas where road salts are used it should be washed at least once a week. Otherwise, it is recommended to hose off the undercarriage area at least once a month to help minimize the corrosion process. High pressure washers or steam cleaners are the most effective way of cleaning off the underside and inside wheel openings. **Avoid directly spraying the painted surface with a high-pressure washer.**

CAUTION:
Exercise caution when cleaning the radiator charge air cooler package. Damage to the fins can result when using a high pressure washer or steam cleaner. Nozzle discharge pressure can exceed 1800 psi. Avoid using high pressure steam cleaners on the exterior paint surfaces. Remove all spattered washing debris from the exterior paint surfaces as soon as possible.

Washing

Periodic cleaning will help to preserve the paint finish. The motorhome is painted with a “base coat, clear coat system.” Clear coat is a polyurethane-based material which brings out the shine and luster to the base coat paint. Care should be used when washing the motorhome. Use only mild detergents or (preferred) specifically designed automotive detergents. Avoid using abrasive cleansers or laundry detergents that will scratch the clear coat and leave a soap film. Use a soft cloth to wash the paint finish. Avoid using brushes as they can scratch the surface and damage the paint. Before washing the motorhome, remove most of the accumulated dirt and “road wash” behind wheel openings, below the windshield and on the rear of the motorhome. If build up is excessive, run water over a soft cotton cloth while gently wiping the surface in one direction. This will help float away the “build-up” from the clear coat. Avoid back and forth or circular motions as this may act like sandpaper, scratching the clear coat and leaving a haze or “swirl marks.” After removing the heavy build-up, use the mixed detergent solution to wash the motorhome. Start washing at the top of the motorhome working towards the bottom. If possible, wash the motorhome in a shaded area when the exterior is not hot to the touch. If necessary, turn the motorhome around to keep the area being washed in the shade. Try not to allow the detergent to dry onto the clear coat surface. Use plenty of water when rinsing the surface to remove all detergent residue.

Drying

Chamois cloths come in natural and synthetic materials. Either type is acceptable as long as the surface is clean. Soak the chamois in clean water, then wring it dry. Remove the water from the surface, starting at the top and working towards the bottom, using a downward "S" pattern. Wring out the chamois as needed. Using a chamois cloth to remove the rinse water is not necessary, but the effort can be worthwhile.

Waxing

To wax or not to wax? This is a good question. There are many schools of thought on this issue. The two most common thoughts are:

- The clear coat needs to "breathe." A layer of wax will seal the clear coat not allowing it to breathe, possibly leading to failure of the clear coat.
- If the surface is not waxed, what is protecting the surface from the environment (road salts, acid rain, road tar, ultraviolet light)?

It is recommended to wax the motorhome twice a year: spring and fall. Many types of protective barriers are available today that may be applied to the clear coat: glazes, waxes, polishes, rubbing compounds or combinations of these products.

NOTE:
Use a grease and wax remover before applying another coat of wax. Chemicals can become trapped between layers of wax, possibly damaging the paint finish.

INFORMATION:
When selecting a product, follow the product manufacturer's recommended application instructions.

Types of Products:
Glazes: Glazes are generally used to fill very fine scratches in the clear coat. They are applied either by hand or by using a polisher with a special pad.

Waxes: Waxes come in many types of chemical make-up. The popular Carnauba wax is a natural occurring wax from the leaves or fronds of the Carnauba palm tree. Mineral waxes have a paraffin base. There are also waxes which contain silicone.

Polishes: Polishes usually contain a combination of wax based substances with an abrasive, getting the two for one idea. These products can be too abrasive for clear coats and are not recommended for use.

Rubbing Compounds: These types of products are generally applied by using a buffer. The use of rubbing compounds should be left to professionals as undesired results can quickly occur. These types of products are generally used to correct or flatten a surface by removing high spots or small amounts of material.

When selecting a product the container should be marked, “safe for clear coats” or “clear coat safe.” Carefully follow the application instructions when using a product. Upon first use of a product, try it on a “small test spot” in an inconspicuous area in case an undesired reaction occurs.

Observe the test area from different angles to check for hazing or swirl marks. If an abnormal reaction to the finish occurs, discontinue product use and consult the product manufacturer. If the product is a paste, do not allow dried paste to be baked on by the sun. Remove paste shortly after drying. Clean, dry, 100% cotton cloths or cotton baby diapers are best suited for the removal of dried paste. Turn the cloth often. Use a separate clean cloth to buff. The surface should feel “slick” when rubbing the cloth lightly over it. Avoid repeated wax applications which can cause wax to build up. Some very fine scratches or swirl marks may be removed by an application of a glaze. These types of glazes fill the scratches or swirl marks.

The motorhome has a large surface area. Washing and waxing may not be completed in one afternoon. Select sections to wax until the motorhome is complete. If the task seems overwhelming, have an automotive detailer perform the task.

Paint Codes

The motorhome color scheme is comprised of specific paint colors, each assigned a code used to achieve a desired color of paint. "Touch-up" paint may be used to repair a small scratch or imperfection in the paint surface. To paint a larger area, it is necessary to obtain the paint code to get the correct color match.

To Obtain the Paint Code:

1. Contact ***National Parts*** at ***1-877-466-6226***.
2. Specify the year, model, serial number and exterior color scheme name (if known).
3. Once the paint code has been obtained for the desired color, contact ***Industrial Finishes*** at ***1-800-531-1305***. They will use the paint code to get the mixing formula.
4. This formula can be mixed at a local BASF paint store.

NOTE:
All special paint schemes require contacting Monaco Coach directly for paint codes.

Tire Care

Road oil will cause deterioration of the rubber. Dirt build-up can hold chemicals in the air, next to the tire, to also cause deterioration.

Proper care and methods in cleaning must be used to obtain the maximum service years out of the tires. Use a soft brush and a mild detergent to clean the tires. If a dressing product is used to “protect” the tires from aging, use extra care and caution. Tire dressings that contain petroleum products or alcohol may cause deterioration or cracking.

In many cases it is not the dressing that causes a problem but the chemical reaction that subsequently occurs. When these same dressing products are used on a passenger car tire that is replaced every three to four years, it is rare to see a major problem. However, in most cases recreational vehicle tires may last longer due to limited annual mileage and exposure.

Wheels - Coated Aluminum

Outside:

The coated surface of the wheels should be treated the same as the paint finish on the motorhome. Road soils, grime and brake dust trap moisture which can cause corrosion over a period of time.

1. Clean frequently with high-pressure water.
2. Using a 100% cotton cloth and a mild soap solution (dish soap or carwash soap is recommended) to speed up the cleaning process.
3. Rinse all remaining soap residue with high-pressure water and wipe dry using a 100% cotton cloth to avoid water spots.
4. A secondary hand washing may be required to remove some stubborn road films.
5. Carnauba wax can be applied to help protect the finish.

NOTE:
Allow wheels that are extremely hot to cool before spraying with cold water.

CAUTION:
DO NOT use the following items on coated aluminum wheels:
- **Polishes (unless marked "safe for clear coat" or Alcoa Aluminum Care).**
- **Synthetic cleaning pads, wire or abrasive brushes, steel wool or scouring pads (these can mar or scratch the finish).**
- **Strong detergents, alkaline or acidic cleaners, acids or lye-based chemical products or solvents.**

CAUTION:
Rinse aluminum wheels using high-pressure water to remove debris from the surface before washing. Do not scrub. Rubbing debris against the surface of the wheel can result in scratches. Do not allow soap solution to dry on the finish of the wheel as spotting will occur.

INFORMATION:
Scratches and minor imperfections in the coating can be repaired. Contact Accuride for "Accuride Technical Bulletin 2.0038" at 1-800-823-8332.

Inside:

If the tires are removed, inspect and clean the entire rim. Air used to fill the tire may contain moisture and can cause the areas of the wheel under the tire to severely corrode. Using a soft brush, remove any foreign materials from the tire side of the rim. Lubricate the rim and tire bead with a non-water-based lubricant before mounting the tire and ensure the inside of tire is dry before installing.

NOTE:
For further information contact Accuride at 1-800-823-8332.

WARNING:
DO NOT use a flammable solution to coat the inside of the rim. This can lead to an explosion during tire inflation or in subsequent operation of the motorhome.

Bright Metal

All chrome and stainless steel should be washed and cleaned each time the motorhome is washed. Use only automotive approved non-abrasive cleaners and polishes on exterior bright work. Do not use rubbing compounds. Do not use abrasive cleaners or compounds to clean the mirrors.

NOTE:
When using chemicals to remove road tars, use only automotive products that are recommended for use on painted surfaces and fiberglass. Observe the warning recommendations and directions printed on the container of any agent being used.

EXTERIOR MAINTENANCE

The motorhome is subject to a great deal of outside conditions. When parked, the motorhome is exposed to extreme temperatures, humidity, ultraviolet rays, acid rain and other environmental conditions. While in operation the motorhome is subject to twisting and flexing caused by rough roads, potholes and winding mountain roads. Maintenance is necessary not only to keep the exterior looking nice, but also to keep it in proper working order.

Fiberglass

Inspect the fiberglass exterior. Periodic inspection may reveal that flexing of the fiberglass exterior has created imperfections in the surface commonly known as "spider" or "hairline" cracks. A crack that has opened up to reveal the cloth weave threatens the integrity of the fiberglass. If the exterior exhibits signs of damage, prevent moisture penetration, particularly in freezing climates. Cover the area using plastic sheeting and/or tape, and have the damaged fiberglass repaired as soon as possible.

Roof Care & Seal Inspections

Periodic resealing of the joints and seams is necessary to prevent the entrance of moisture into the motorhome. Enough emphasis cannot be placed on this issue. Extreme damage from a water leak can rapidly occur. Never leave the vehicle unattended with a slide room extended. If the motorhome is to be stored outdoors during the winter months, perform a full interior inspection for water leaks every two weeks.

Extensive sealing has been done at the factory, but the normal twisting and flexing that occurs while traveling may compromise a seal or a seam. Inspect all joints and seams at least twice each year, and replace caulking as necessary. Special attention should be directed toward the roof air conditioner seals, ceiling and plumbing vents, skylights, roof mounted antennas, windows, door molding, clearance lights and beltline molding.

Specific sealant products, available at most RV supply outlets, should be used in most areas for which they are designed. Listed below are some common sealants and the areas for which they are designed.

INSPECT:
All joints and seams should be inspected at least twice a year and recaulked as necessary.

WARNING:
Some products may contain hazardous materials which require special handling. Read labels carefully. Follow all product manufacturer safety requirements.

Sealant Types

Acryl-R:

Used on all roof openings such as vents, skylights, roof-mounted antennas and ladder roof mounts. Sealant should be applied only where equipment bases meet the roof. Acryl-R is generally available in a caulking tube. Two colors are available - white and silver. Silver is used on items mounted on the forward painted area of the roof. White is used at all other points. Remove old sealant that is not adhered. Sealant that is secured need not be removed. Dirty or damp surface areas will compromise sealant effectiveness. Thoroughly clean and dry the surface area before applying new sealant. Lay masking tape around the area to be sealed to stop sealant from spreading beyond the desired area. Using a caulking gun, apply new sealant as needed, working the caulking gun in a manner that will cause the sealant to fully adhere to the applied area. Allow adequate cure time. Roof air conditioners use a closed cell foam base gasket and do not require sealant. The roof air conditioners should be regularly inspected for tightness at the four mounting bolts, one located in each interior corner of the air conditioner roof opening. Torque specification is 40 to 50 in/lbs. The base gasket should be compressed to approximately one-half inch.

Acrylic Sealants (geocel 2300):

Used where items are sealed under a painted surface such as the metal corners of slide out rooms. The material is specially formulated to allow paint adhesion.

Black Urethane:

Used for sealing windshields, not designed to fill holes or other imperfections. Black Urethane is available in a tube that applies similar to silicone. Clean up using solvents such as paint thinner. Gloves are required when using this hazardous material.

Silicone:

Primarily used on the sidewalls around windows, doors, handles, beltline molding, latches and bases of surface mounted items such as clearance lights. Old peeling sealant should be removed with nylon sticks or equivalent. Metal utensils can scratch the painted surface. Avoid lacquer thinners or ketone based solvents as these chemicals can damage painted surfaces. Confirm that surface is clean and dry before a new application. Cut the tube at an angle with the smallest usable opening. Avoid a heavy bead. A little goes a long way.
Use finger at a 45° angle on beaded surface to smooth out product. Do not moisten finger, use a disposable latex glove. Keep rags or paper towels handy for clean up. Use care when applying silicone. Plan ahead before starting a bead, look for obstacles that may impede application.

Spray Foam:

This product is used as a sealant where a hole has been made for items such as water lines or wires that are coming through a floor opening.

INTERIOR CARE
Cockpit

The cockpit area dashboard is a molded-fiberglass, vinyl-wrapped pod. The instrument panel is comprised of various gauges and switches. The dashboard and instrument panel each have different cleaning requirements. Clean the vinyl wrapped dash pod following the instructions under Vinyl Care in this section. In the event a blemish or small cut occurs in the vinyl, contact a professional upholstery repair service.

Clean the plastic or Plexiglas® instrument panels using a cloth dampened in a mild soap and water solution. Dry using a separate cotton cloth. Plastic polish products that will help to brighten the appearance of plastic or Plexiglas instrument panels are Novus Plastic Care®, a three-part system; Meguires®; and Johnson Paste Wax®, which will require extensive buffing and rubbing.

Glass lens gauges can be cleaned using glass cleaner. Spray cleaning on the cloth, not directly onto the lens, to prevent over spray or runoff.

CAUTION:
Do not allow glass cleaners to come in contact with the plastic. Most glass cleaning products are volatile to plastics, and will cause it to become brittle or dull the finish.

TIP:
To determine if the lens is glass or plastic, tap the lens with a fingernail. Plastic lens will have a dull hollow sound whereas glass will have a clear ping sound.

Use glass cleaners on glass lens only.

FABRICS

Special care needs to be taken when the motorhome is exposed to a very humid climate for an extended period of time. Protect the fabric from any unnecessary exposure to moisture. Cover all upholstery and make sure window coverings are down to protect fabrics from sun damage. Frequently used items require more attention than those items not regularly used.

Guidelines for Cleaning Upholstery Fabrics:
- Water-based cleaners are not recommended.
- If a spill does occur, blot the soiled area. Do not rub it.
- Some solvents may have an adverse reaction on a specific backing of the upholstery fabric and are not recommended.
- To prevent overall soiling, frequent vacuuming or light brushing are recommended to remove dust and grime.
- Clean spots using a mild water-free solvent or dry cleaning product.
- Clean only in a well ventilated area and avoid any product containing carbon tetrachloride or other toxic materials.
- Use a professional furniture cleaning service for overall cleaning.

The codes listed below detail cleaning instructions recommended by the fabric manufacturing industry. Refer to the fabric charts, located on the following pages, for particular fabrics and follow the recommended cleaning code.

If a spill occurs, blot the moisture as quickly as possible. **Do not** use soap and hot water as this may set a stain. Clean the spot as soon as possible.

"W" - Clean this fabric with the foam only of a water-based cleaning agent to remove the overall soil. Many household cleaning solvents are harmful to the color and life of a fabric. Cleaning only by a professional furniture cleaning service is recommended. To prevent overall soil, frequent vacuuming or light brushing to remove dust and grime is recommended.

"S" - Clean this fabric with pure solvents (petroleum distillate-based products such as Energine, Carbona, Renuzit, or similar products may be used) in a well ventilated room. Cleaning only by a professional furniture cleaning service is recommended.

CAUTION:
Use of water-based or detergent-based solvent cleaners may cause excessive shrinking. Water stains may become permanent and unable to be removed with solvent cleaning agents. Avoid products containing Carbon Tetrachloride as it is highly toxic. To help prevent overall soiling, frequent vacuuming or light brushing to remove dust and grime is recommended.

"S/W" - Clean this fabric with the foam only of a water-based cleaning agent or with a pure solvent in a well ventilated room (petroleum distillate-based products such as Energine, Carbona, Renuzit, or similar products may be used). Cleaning only by a professional furniture cleaning service is recommended. To help prevent overall soiling, frequent vacuuming or light brushing to remove dust and grime is suggested.

"P" - The article is resistant against perchlorethene, cleaning benzine (spirit), white spirit, R-11 and R-13.

"Dry Clean Only" - Cleaning only by a professional dry cleaner or furniture cleaning service is recommended for this fabric.

"X" - Vacuum only. A non-metallic brush may be used.

***Machine Washing for 100% Polyester:**

"Wash Cycle" - Use synthetic setting and high water level with mild agitation. A mild soap or detergent in water not to exceed 160º F. No bleach or fabric softener.

"Drying" - Use low temperatures, a synthetic setting of 85º F to 90º F maximum should be used. Do not exceed three to five minutes time on the synthetic cycle. If washed at 160º F, the maximum temperature which can be used to dry is 140º F. Hang or fold immediately after drying.

"Finishing" - If necessary, press as following:
- Iron on low setting (275° F) with damp cloth or steam iron using a dry press cloth.
- Grid Head press for short intervals with minimum steam. Do not lock the head.
- Flat bed press dampened drapery using cloth covering.
- Avoid prolonged contact with heat.

Fabric Specifications Charts

COLOR/PATTERN	APPLICATION	CONTENTS	CODE
Woodland Spice .14d			
Tumbleweed Buff	DR/Pass Chairs	Leather	Leather
Lambskin Buff	DR/Pass Chair Inserts	Leather	Leather
Palomino	Main Dash Color	Vinyl	Vinyl
Tumbleweed Buff	Vinyl Accents	Vinyl	Vinyl
Johnson Cream	Windshield	100% Polyester	Dry Clean
Savoy Tobacco	Sofa, J-Lounge, L-Lounge	60% Rayon, 40% Polyester	S
Frontier Sand	Opt. J-Lounge, Opt. L-Lounge, J-Dinette, Recliner, Euro Recliner, Dinette Seat & Base	Leather	Leather
Plush Grounds Chocolat	LR Valance, LR Pillows, Dinette Back, FSD	64% Rayon, 36% Polyester	S
McAngus Chocolat	LR Pillows, BR Chair, Bedskirt, BR Pillows	100% Polyester	S
Invigorate Chocolat	Club Chair, LR/SE Valance, LR Pillows, BR Sham Accent	61% Polyester, 39% Cotton	S
Meadowlands Chocolat	Duvet, BR Valance, BR Pillows, BR Shams	100% Spun Rayon	S
Atelier Byblos 5250-4907-523	Duvet Accent, BR Valance, BR Pillows	47% Wool, 29% Polyester, 19% Silk, 5% Nylon	S
20802 Woodland Spice 1-3/4" Fringe	Decorative Fringe	17% Acetate, 26% Chenille, 24% Polypropylene, 14% Rayon, 17% Spun Polyester, 2% Polyester	N/A
50488 Woodland Spice 3/8" Cord with Lip	Decorative Cord	41% Polypropylene, 26% Rayon, 7% Chenille, 10% Spun Polyester, 16% Acetate	N/A
Woodland Spice 5" Boullion	Decorative Boullion	28% Polypropylene, 12% Acetate, 8% Rayon, 24% Spun Polyester, 19% Chenille, 8% Acrylic, 1% Polyester	N/A
TS 1790	Decorative Tassels	N/A	N/A
Sensuede 0009 Cordovan	LR/BR Ceiling Accent A	88% Polyester, 12% Polyurethane	S - Dry Clean
Sensuede Oatmeal	LR/BR Ceiling Accent B	88% Polyester, 12% Polyurethane	S - Dry Clean
Sensuede Latte	LR/BR Ceiling Accent C	88% Polyester, 12% Polyurethane	S - Dry Clean

COLOR/PATTERN	APPLICATION	CONTENTS	CODE
Black Hills Gold .15d			
Tumbleweed Buff	DR/Pass Chairs	Leather	Leather
Lambskin Buff	DR/Pass Chair Insert	Leather	Leather
Palomino	Main Dash (Vacuumed)	Vinyl	Vinyl
Tumbleweed Buff	Vinyl Accents (Wrapped)	Vinyl	Vinyl
Johnson Cream	Windshield	100% Polyester	Dry Clean
Penfield WB-DNT #1-U12194-E	Sofa, J-Lounge, L-Lounge, LR Pillow, BR Chair	73% Rayon, 26% Polyester, 1% Nylon	S
Tumbleweed Black	Recliner, Euro Recliner	Leather	Leather
Parisienne Pecan	Opt. Sofa/J-Lounge/L-Lounge, J-Dinette, Dinette Seat and Base	Leather	Leather
Lattice Charcoal	LR Valance, LRSE Valance, Dinette Back, FSD	76% Rayon, 24% Polyester	Dry Clean
Connery Antique	LR Valance, LRSE Valance, Club Chair, LR Pillows, BR Shams	44% Viscose Chenille, 24% Spun Rayon, 22% Polyester, 13% Cotton	S
Minda-F Praline	LR Valance, Duvet, BR Shams	100% Polyester	S
Minda-F Beeswax	Duvet Accent, BR Shams, BR Pillows	100% Polyester	S
Micor Sheen 0303	BR Valance, BRSE Valance	62% Polyester 38% Rayon	S
Nature Valley Black	BR Valance, BRSE Valance, Duvet, BR Pillows	100% Egyptian Mercerized Cotton	Dry Clean
Dollar-F Leopard	Bedskirt, BR Pillow	79% Viscose, 16% Polyester, 5% Acrylic	S
20802 1-3/4" Cut Fringe	Decorative Trim	17% Acetate, 26% Chenille, 24% Polypropylene, 14% Rayon, 17% Spun Polyester, 2% Polyester	N/A
50487 3/8" Cord/Apron Black Hills Gold	Decorative Cord	8% Chenille, 20% Polypropylene, 60% Rayon, 10% Spun Polyester, 2% Acetate	N/A
30244 5" Bullion	Decorative Bullion	14% Acetate, 13% Polypropylene, 12% Rayon, 37% Spun Polyester, 16% Chenille, 7% Acrylic, 1% Polyester	N/A
TS 1780	Decorative Tassel		N/A
Sensuede 0049 Cinder	LR/BR Ceiling Accent A	88% Polyester, 12% Polyurethane	S - Dry Clean
Sensuede 9068 Chamois	LR/BR Ceiling Accent B	88% Polyester, 12% Polyurethane	S - Dry Clean
Sensuede 9047 Sand	LR/BR Ceiling Accent C	88% Polyester, 12% Polyurethane	S - Dry Clean

Gentlemans Retreat .36a			
Tumbleweed Buff	DR/Pass Chair	Leather	Leather
Lambskin Buff	DR/Pass Chair Insert	Leather	Leather
Palomino	Main Dash Color	Vinyl	Vinyl
Tumbleweed Buff	Vinyl Accents	Vinyl	Vinyl
Johnson Cream	Windshield	100% Polyester	Dry Clean
Habanera-H Hazel	Sofa, J-Lounge, L-Lounge	70% Rayon, 23% Cotton, 7% Linen	S
Frontier Sand	Opt. J-Lounge, Opt. L-Lounge J-Dinette, Recliner, Euro Recliner, Dinette Seat & Base	Leather	Leather
Albert Hall Golden Chive	LR/SE Valance, LR Pillows, FSD, Dinette Back	85% Rayon, 15% Polyester	Dry Clean
Indochine-H Oregano	LR Valance, LR Pillow	55% Viscose, 45% Cotton	S
Burattino-H Basil	Club Chair, LR Pillow	78% Rayon, 22% Cotton	S
Opinion-H Fern	LR Pillow, BR Chair, BR Pillow	55% Polyester, 45% Cotton	S
Shinto-H Hickory	LR Pillow, LR Valance Cord	100% Silk	Dry Clean
Ellie-Sage	BR Valance, Duvet, BR Shams, BR Pillow	100% Silk	Dry Clean
Haiku-H Seamoss	BR Valance, Duvet Accent, BR Pillow	100% Silk with 100% Rayon Embroidery	Dry Clean
Tuxedo-H Patina	Bedskirt, BR Shams, BR Pillow	100% Silk	Dry Clean
2" Brush Fringe FR31829	Trim	N/A	N/A
1/4" Tri-Cord w/Tab CD31829	Trim	N/A	N/A
3" Tassel w/1" Loop M2258831829	Tassel	N/A	N/A
Sensuede Haze 1051	Ceiling	88% Polyester, 12% Polyurethane	S - Dry Clean
Sensuede Frond 1148	LR/BR Ceiling Accent A	88% Polyester, 12% Polyurethane	S - Dry Clean
Sensuede Latte 8065	LR/BR Ceiling Accent B	88% Polyester, 12% Polyurethane	S - Dry Clean

COLOR/PATTERN	APPLICATION	CONTENTS	CODE
Black Hills Gold .15d			
Tumbleweed Buff	DR/Pass Chairs	Leather	Leather
Lambskin Buff	DR/Pass Chair Insert	Leather	Leather
Palomino	Main Dash (Vacuumed)	Vinyl	Vinyl
Tumbleweed Buff	Vinyl Accents (Wrapped)	Vinyl	Vinyl
Johnson Cream	Windshield	100% Polyester	Dry Clean
Penfield WB-DNT #1-U12194-E	Sofa, J-Lounge, L-Lounge, LR Pillow, BR Chair	73% Rayon, 26% Polyester, 1% Nylon	S
Tumbleweed Black	Recliner, Euro Recliner	Leather	Leather
Parisienne Pecan	Opt. Sofa/J-Lounge/L-Lounge, J-Dinette, Dinette Seat and Base	Leather	Leather
Lattice Charcoal	LR Valance, LRSE Valance, Dinette Back, FSD	76% Rayon, 24% Polyester	Dry Clean
Connery Antique	LR Valance, LRSE Valance, Club Chair, LR Pillows, BR Shams	44% Viscose Chenille, 24% Spun Rayon, 22% Polyester, 13% Cotton	S
Minda-F Praline	LR Valance, Duvet, BR Shams	100% Polyester	S
Minda-F Beeswax	Duvet Accent, BR Shams, BR Pillows	100% Polyester	S
Micor Sheen 0303	BR Valance, BRSE Valance	62% Polyester 38% Rayon	S
Nature Valley Black	BR Valance, BRSE Valance, Duvet, BR Pillows	100% Egyptian Mercerized Cotton	Dry Clean
Dollar-F Leopard	Bedskirt, BR Pillow	79% Viscose, 16% Polyester, 5% Acrylic	S
20802 1-3/4" Cut Fringe	Decorative Trim	17% Acetate, 26% Chenille, 24% Polypropylene, 14% Rayon, 17% Spun Polyester, 2% Polyester	N/A
50487 3/8" Cord/Apron Black Hills Gold	Decorative Cord	8% Chenille, 20% Polypropylene, 60% Rayon, 10% Spun Polyester, 2% Acetate	N/A
30244 5" Bullion	Decorative Bullion	14% Acetate, 13% Polypropylene, 12% Rayon, 37% Spun Polyester, 16% Chenille, 7% Acrylic, 1% Polyester	N/A
TS 1780	Decorative Tassel		N/A
Sensuede 0049 Cinder	LR/BR Ceiling Accent A	88% Polyester, 12% Polyurethane	S - Dry Clean
Sensuede 9068 Chamois	LR/BR Ceiling Accent B	88% Polyester, 12% Polyurethane	S - Dry Clean
Sensuede 9047 Sand	LR/BR Ceiling Accent C	88% Polyester, 12% Polyurethane	S - Dry Clean

COLOR/PATTERN	APPLICATION	CONTENT	CODE
Landsdown .45b			
Passport Sand	Driver / Passenger Chairs	Vinyl	Vinyl
Tracker II Passport Sand	DR/Pass Vinyl Surround & Vinyl Accents	Vinyl	Vinyl
Johnson Cream	Windshield Drape	100% Polyester	Dry Clean
Palomino	Main Dash	Vinyl	Vinyl
Hewitt Herringbone Brown LCF-18585F	Sofa, LR Pillows, LR Val, Dinette Surround	100% Cotton	Dry Clean
Africana Dark Brown	Sofa Accent, Recliner Accent, J-Lounge Accent	Leather	Leather
Amalfi Dark Brown	Sofa Acnt, Opt. Sofa, Recliner Seat Back, Euro-Recliner, J-Lounge, D/P Seat Welt	Leather	Leather
Terrazo Color 3 Walnut	FSD, Dinette Cushions	60% Cotton, 40% Polyester	Dry Clean
Landsdown Brown LFY-11975F	LR Pillow	75% Cotton, 25% Wool	Dry Clean
Houndstooth Cranberry LCF 14646F	LR Pillows	100% Cotton	Dry Clean
Kathleen Courtyard Floral Burgundy	Bedspread, BR Lambrequin, BR Pillow	57% Linen 43% Cotton	Dry Clean
Palace Color 17 Cider	Bedspread Accent / BR Lambrequin, BR Pillow	39% Spun Viscose, 35% Wool, 22% Polyester, 4% Nylon	Dry Clean
Glengariff Plaid Loden	Bedroom Pillow	100% Wool	Dry Clean
Vociferous 6 Lion	Bedskirt, BR Desk Chair, BR Pillow	57% Polyester, 43% Silk	Dry Clean
Fremont Stripe Burgundy LFY-20621-F	BR Pillow, LR Pillow	100% Wool	Dry Clean
Hamilton Ivory	Main Ceiling	Vinyl	Vinyl
Sensuede 505 Biscuit	Ceiling Accent	88% Polyester, 12% Polyurethane	S - Dry Clean
Sensuede 505 Latte	Ceiling Accent	88% Polyester, 12% Polyurethane	S - Dry Clean
Sensuede 0009 Cordovan	Ceiling Accent	88% Polyester, 12% Polyurethane	S - Dry Clean
FRB 1171 2" Brush Fringe Polo	Decorative Fringe 2" - LR/BR Pillow	45% Polyester, 45% Acrylic, 10% Rayon	S
CD 1171 4-ply Cord w/tab Polo	Decorative Cord - LR/BR Pillow, Bedspread	48% Acrylic, 43% Polyester, 9% Rayon	S
BU 1171 4" Bullion Fringe	4" Boullion Fringe - LR/BR Pillow	55% Acrylic, 33% Polyester, 12% Rayon	S
RST 1171 1 1/4" Rosette w/3" tassel Polo	Decor Tassel Button - LR Lamb, BR Lamb, BR Pillow	47% Polyester, 38% Acrylic, 15% Rayon	S

COLOR/PATTERN	APPLICATION	CONTENT	CODE
Londonderry .46b			
Tumbleweed Milkweed	DR/Pass Chairs	Leather	Leather
Johnson Cream	Winshield Drape	100% Polyester	Dry Clean
Milkweed	Main Dash (Vacuumed)	Vinyl	Vinyl
Tumbleweed Milkweed	Vinyl Accents (Wrapped)	Vinyl	Vinyl
Chelsea Windowpane Harvest LFY19566F	Sofa, Dinette Cushions	100% Linen	Dry Clean
Amalfi Dark Brown	Opt. Sofa, J-Lounge, Recliner, Euro-Recliner, Sofa Welt	Leather	Leather
Sport Mahogany REC20623F	Headboard	78% Polyvinyl Clorue, 22% Cotton	soap & water
Rustic Teju - Brown	FSD, LR Pillow	Leather	Leather
Dragonwell Damask Chocolate LFY19428F	LR Val, Optional Cloth J-Lounge, LR Pillow, Dinette Surround	79% Cotton, 21% Silk	Dry Clean
Mackay Metallic Chamois LFY20662F	LR Pillow	100% Silk	Dry Clean
Grassmere Silk Champagne LFY 20810F	BR Accent, BR Lambrequin, Pillow Shams, BR Pillow	100% Silk	Dry Clean
Banana Leaf Coffee LCF18802F	Bedspread, BR Lambrequin, Pillow Shams, BR Pillow	75% Cotton, 25% Linen	Dry Clean
Rourke Rib Tan LFY20724F	BR Val, BR Desk Chair	100% Cotton	Dry Clean
Runyon Plaid Olive LFY18150F	BR Pillow	100% Wool	Dry Clean
Hamilton Ivory	Main Ceiling	Vinyl	Vinyl
Sensuede 505 Biscuit	Ceiling Accent	88% Polyester, 12% Polyurethane	S - Dry Clean
Sensuede 9065 Latte	Ceiling Accent	88% Polyester, 12% Polyurethane	S - Dry Clean
Sport Mahogany REC20623F	Ceiling Accent	78% Polyvinyl Clorue, 22% Cotton	soap & water
CD 1303B Bisque	Decorative Cord - Living Area	59% Acrylic, 20% Olefin, 10% Rayon, 9% Vinyl, 2% Polyester	S
CD 1297A Brown	Decorative Cord - Bedroom	41% Olefin, 34% Polyester, 20% Acrylic, 5% Vinyl	S
BTN 1303 Bisque	Decorative Buttons - Living Area	72% Acrylic, 18% Rayon, 10% Vinyl	S
BTN 1297 Brown	Decorative Buttons - Bedroom	41% Olefin, 34% Polyester, 25% Acrylic	S
TSFR 1303 Bisque	Tassel Fringe - Living Area	69% Acrylic, 26% Rayon, 5% Polyester	S
TSFR 1297 Brown	Tassel Fringe - Bedroom	59% Acrylic 21% Rayon, 17% Polyester, 3% Vinyl	S

COLOR/PATTERN	APPLICATION	CONTENT	CODE
Churchill (Limited Edition) .47b			
Amalfi New Camel	Driver/Passenger Chairs	Leather	Leather
Illusion Joe Camel	DR/Pass Chair Vinyl Surround and Vinyl Accents	Vinyl	Vinyl
Johnson Cream	Windshield Drape	100% Polyester	Dry Clean
Palomino	Main Dash	Vinyl	Vinyl
Buff	Vinyl Accents (Wrapped)	Vinyl	Vinyl
Bronson Geometric Navy LFY-20601F	Sofa, LR Pillow, Dinette Surround	100% Linen	Dry Clean
Sonoma Camel	Opt. Sofa, J-Lounge, Recliner, Euro-Recliner	Leather	Leather
Dotcom Color 18 Sumac	LR/BR Val, FSD, Dinette Cushions, BR Pillow, BR Desk Chair	40% Cotton, 34% Polyester, 20% Acrylic, 6% Spun Viscose	N/A
Stapleton Plaid - Navy LFY-21921F	LR Pillows	100% Cotton	Dry Clean
Valiant Belting Red LFY-21901F	LR Pillows	100% Cotton	Dry Clean
Sahara 0027 Midnight	Bedspread, BR Pillows	96% Cotton, 4% Linen	S
Edwards Jacquard - Navy LFY-21723F	Bedspread Accent, BR Pillow	100% Lambswool	Dry Clean
Jardinieve Flora - Scarlet LFY-14810F	BR Pillow	100% Cotton	Dry Clean
Hamilton Ivory	Main Ceiling	Vinyl	Vinyl
Sensuede 505 Biscuit	Ceiling	88% Polyester, 12% Polyurethane	S - Dry Clean
Sensuede 1141 Loam	Ceiling	88% Polyester, 12% Polyurethane	S - Dry Clean
Sensuede 9065 Latte	Ceiling	88% Polyester, 12% Polyurethane	S - Dry Clean
FRL 1186 2" Loop Fringe Equestrian	Decorative Fringe - LR/BR Pillow	54% Acrylic, 27% Polyester, 15% Rayon, 4% Polypropylene	S
CD 1186 1/2" 4-ply Cord w/tab Equestrian	Decorative Cord - LR/BR Lambrequin, LR/BR Pillow	36% Olefin, 32% Acrylic 18% Polyester, 9% Rayon, 5% Vinyl	S
BTNX 1186 1 1/2" Button Equestrian	Decorative Button - BR Pillow	58% Acrylic, 24% Polyester, 12% Spun Rayon, 6% Polypropylene	S
BU 1186	Decorative Bullion Fringe - LR/BR Pillow	22% Olefin, 42% Acrylic, 25% Polyester, 11% Cotton	S

Vinyl

Several areas of the motorhome, such as the dash, ceiling and items of furniture, may be covered in vinyl. The care and cleaning of these areas are as follows:

Normal Cleaning:

Most common stains can be cleaned using warm soapy water and a clear water rinse. Moderate scrubbing with a medium bristle brush will help to loosen soil from the depression of embossed surfaces. For stubborn stains use the following commercially available mild detergents in accordance with the manufacturer's instructions: *Mr. Clean* or *Fantastik*.

Full strength rubbing alcohol or mineral spirits may be tried cautiously as a last resort on very stubborn stains if the above suggestions do not work. Indiscriminate use of any solvent, or solvent containing cleaner, can severely damage or discolor the vinyl. Stains may become permanent if they are not immediately removed.

NOTE:
Detergents should never be used on a regular or repeated basis for normal cleaning.

CAUTION:
Powdered cleaners containing abrasives, steel wool and industrial strength cleaners are not recommended for vinyl.

Bird Excreta & Vomit Stains:
Sponge the area with soapy water containing a diluted bleach until the stain is removed. Rinse thoroughly with clean water.

Urine Stains:
Sponge with soapy water containing a small amount of household ammonia. Rinse thoroughly with clean water.

Surface Mildew:
Wash with diluted bleach and use a soft brush for stubborn growth. Rinse repeatedly with clear, cold water.

Ballpoint Ink:
Wipe the stain immediately with rubbing alcohol in a well ventilated area.

WARNING:
If flammable solvents such as alcohol, turpentine or varsol are used for cleaning, use only small quantities while in a well-ventilated area. Exercise proper caution by notifying any persons in the area. Keep away from any ignition source. Always wear protective gloves.

Oil-Base Paint:
Use turpentine in a well ventilated area to remove any fresh paint. Dried paint must be moistened using a semi-solid, gel-type stripper. The softened paint can be gently scraped away. Rinse with soap and water.

CAUTION:
Lacquer solvent will cause immediate irreparable damage to the vinyl. Do not use wax on vinyl upholstery as it will cause premature embrittlement and cracking. Dilute chlorine bleach before using. Never use full strength bleach. Paint strippers will remove the print pattern and damage the vinyl if it comes in direct contact.

Latex Paint:
Fresh paint can be wiped off with a damp cloth. Hot soapy water will normally remove dried latex.

Tar or Asphalt:
Remove immediately. Prolonged contact will result in a permanent stain. Use a cloth lightly dampened with mineral spirits and rub the stain gently, working from the outer edge of the stain toward the center to prevent spreading. Rinse with soap and water.

Crayon, Mustard or Ketchup:
Sponge with mild soap and water. For stubborn stains that have set, use a cloth soaked in diluted mild detergent with gentle rubbing. Any remaining stain should be washed with diluted bleach. Rinse repeatedly with cold water.

Chewing Gum:
Scrape off as much gum as possible using a dull knife. Rub the gum with an ice cube to harden and for easier removal. In a well ventilated area, use a cloth saturated with mineral spirits and gently rub the remaining gum. Rinse thoroughly with clean water.

Lipstick, Grease, Oil, Make-Up or Shoe Polish:
Apply a small amount of mineral spirits with a cloth. Rub gently. Be careful not to spread the stain by smearing beyond the original source. Remove shoe polish immediately as it contains a dye which will cause permanent staining. Rinse thoroughly with clean water.

Candy, Ice Cream, Coffee, Tea, Fruit Stains, Liquor, Wine, Tanning Lotion or Soft Drinks:
Loose material should be gently scraped with a dull knife. Use lukewarm water and sponge repeatedly. Any soiled area that remains after drying should be gently rubbed with a cloth, dampened with a mild detergent solution. Rinse thoroughly with clean water.

Blood or Plant Residue:
Rub out spots using a clean cloth, soaked in cool water. For stubborn spots, use household ammonia and rinse repeatedly with a clean, wet cloth. Do not use hot water or soap suds as this will set the stain.

TIP:
Vinyl requires periodic cleaning to maintain its appearance and to prevent the buildup of dirt and contaminants that may permanently stain or reduce the life of the vinyl if left untreated. Frequency of cleaning and procedures used depend upon the amount of use and the environmental conditions in which the vinyl is subjected. Tears or holes in the vinyl can be temporarily covered with clear tape to prevent further damage. Repairs should be made by a professional upholstery shop. Commercial repair products may contain lacquers and cause the vinyl to become brittle and more difficult to repair.

Leather

Spots & Spills:
Absorb excess liquid immediately with a clean cloth or sponge. Use water only if necessary. Do not use a cleaning product. If water is used, clean the entire area where the spot occurred. An example would be the entire seat cushion or the entire arm. Allow to air dry. Do not dry the wet areas with hair dryers, etc.

Stubborn Spots and Stains:
Use lukewarm water and a mild soap to work up a thin layer of suds on a piece of cheesecloth. Scrub the surface. Rinse with a piece of clean, damp cheesecloth. Allow to air dry. Do not use saddle soap, cleaning solvents, furniture polish, oils, varnish, abrasive cleaners, soaps or ammonia water.

NOTE:
These are recommended or suggested methods of cleaning. The manufacturer is not responsible for damage incurred while cleaning. Always test the cleaning method in an inconspicuous area first before applying to the entire area.

Sensuede

Sensuede is an easy care fabric designed to be wrinkle resistant, washable and colorfast. Everyday upkeep is quick once-overs with a suede brush to restore the nap and soft luster appearance of Sensuede.

Laundering/Dry Cleaning:
Sensuede is machine-washable. However, when combined with materials for lining that do not stand up to a washing machine, the fabric should be professionally dry-cleaned.

Stain Removal:
Generally a stain can be removed using a dampened soft cloth. Light stains should be brushed using a suede brush. Deep stains may require rubbing with an eraser or fine sand paper. A knife or spoon may be used to remove sticky stains. Always avoid rubbing the stain into the material.

For Persistent Stains:
Liquid Stains - Coffee, tea, juice, milk, soda, beer, wine, sauce, ink, ketchup, etc.: Blot the stain to remove excess residue. Use a cloth soaked in warm sudsy water to remove the stain. A dry cloth should be placed on the reverse side to absorb excess water. Repeat until the stain is removed and no soap residue remains.

Oil Based Stains - Lipstick, cosmetics, shoe polish, ball point pen, markers, butter, salad oil, machine oil, etc. Use the same process as for liquid stains. If the stain remains, a cloth dampened with benzine, alcohol, or a dry cleaning agent can be gently rubbed over the spot.

Paints or Varnish - Use the remover designed for the staining agent. However, as chemicals can harm or discolor the material, test the remover on a corner of the material.

Once stain is removed, blot with a dry cloth to remove any excess water and allow to air dry.

Use the solution specified in order from 1-8 until stain is removed.	A DRY CLEANING FLUID	B NAIL POLISH REMOVER	C DETERGENT SOLUTION	D WARM WATER	E VINEGAR SOLUTION	F AMMONIA SOLUTION	G STAIN REMOVAL KIT	H CALL PROFESSIONAL	I PERMANENT CHANGE
SPOTS									
Acid				2		1		3	*
Acne Medication		1		2	5	4	3	6	*
Alcoholic Beverage			1	4	3	2			*
Ammonia				2	1				*
Bleach		1	2					3	*
Blood		1	3		2	4			
Candle Wax	1					2			
Cement & Glue	2	1	3		5	4	6		*
Chalk		1	2						
Charcoal		1	2						
Chewing Gum	1								
Coffee			1	3	2		4	5	*
Cosmetics		2	1	3	6	5	4	7	*
Crayon	1		2	3					
Drain/Toilet Cleaner			2	1	3			4	*
Dye	1		2		4	3	5	6	*
Food			1	4	3	2	5	6	*
Fungicides, Insecticides, Pesticides	1		2	5	4	3	6	*	
Furniture Polish (Water Based)			1	4	3	2	5	6	*
Furniture Polish (Solvent Based)	2	1	3	6	5	4	7	8	*
Furniture Stain	2	1	3	6	5	4	7	8	*
Graphite		1	2						
Grease	1	2	3				4	5	*
Ink	2	1	3	6	5	4	7	8	*
Iodine	1		2	5	4	3	6	7	*
Lipstick	2	1	3	6	5	4	7	8	*
Medicine	2	1	3	6	5	4	7	8	*
Merthiolate			1	4	3	2	5	6	*
Nail Polish	2	1	3				4	5	*
Oil	1		2	4		3		5	*
Paint	2	1	3				4	5	*
Plant Food			1	4	3	2	5	6	*
Rust			2	3	1		4	5	*
Shoe Polish	2	1	3	5		4	6	7	*
Soft Drinks			1	4	3	2	5	6	*
Soot	1		2	3				4	*
Tar	1						2	3	*
Toothpaste			1						
Urine			1		2		3	4	*
Vomit			1	4	3	2	5	6	*

* While recommended cleaning agents are effective, some stains may become permanent.

Cleaning Solutions:

A. Dry Cleaning Fluid: A nonflammable spot removal liquid, available in grocery and hardware stores.

B. Nail Polish Remover: Any acetate, which often has a banana fragrance. Do not use if it contains acetone.

C. Detergent Solution: Mix two cups of cold water and 1/8 teaspoon mild liquid detergent (no lanolin, non-bleach).

D. Warm Water: Lukewarm tap water.

E. Vinegar Solution: One cup white vinegar to one cup water.

F. Ammonia Solution: One tablespoon household ammonia to one cup water.

G. Stain Removal Kit: Available from retail carpet stores or professional cleaners.

H. Call Professional: Additional suggestions, special cleaning chemicals or the ability to patch the area may be available.

I. Permanent Change: Due to the nature of the stain, there may be color loss. The carpet has been permanently dyed or the carpet yarns have been permanently damaged.

NOTE:
While the recommended cleaning agents have proven to be effective, some stains may become permanent.

Spot Removal Procedures:

- Act quickly when anything is dropped or spilled. Remove spots before they dry.
- Blot liquids with a clean, white absorbent cloth or paper towel.
- For semi-solids, scoop up with a rounded spoon.
- For solids, break up and vacuum out as much as possible.
- Pretest the spot removal agent in an inconspicuous area to make certain it will not damage the carpet dyes.
- Apply a small amount of the cleaning solution recommended for the particular spot. Do not scrub. Work from the edges of the spot to the center. Blot thoroughly. Repeat until spot is removed.
- Follow steps on the Carpet Spot Removal Guide.
- After each application, absorb as much as possible before proceeding to the next step.
- Absorb remaining moisture with layers of white paper towels, weighted down with a non-staining glass or ceramic object.
- When completely dry, vacuum or brush the pile to restore texture.
- If the spot is not completely removed, contact a professional carpet cleaner.

Tile Floors

Tile floors vary in porosity and surface irregularities. Regular maintenance is important to keep the tile in the motorhome looking showroom new. Once the slide-out has been extended, keep the tile floor clean to prevent dirt from scratching the tiles prior to retracting the slide-out.

NOTE:
Tile is ceramic and will chip and break easily. Avoid dropping heavy or sharp objects on the tile.

Cleaning Tile:

Use a damp sponge mop or a cloth to clean tile. If moderate staining occurs, cleaning with a window cleaner such as *Windex* should do the job. A mild solution of hot water and all-purpose cleaner for tile floors, walls and countertops can also be used. Rinse well with clear water and dry with a soft cloth to prevent streaking. Avoid cleaning tile with soap. Soap forms a film to dull the luster. Soap also promotes the growth of mildew and bacteria. Do not use powdered cleaners on unglazed tile floors. Undissolved powder will dull the surface. Grout sealers are available that protect the porous surfaces. If a sealer is used, follow the sealant manufacturer guideline for application. Never use sealers on unglazed tile. With the exception of terra cotta, which may be oiled or waxed, tile does not need to be polished or buffed to maintain its finish.

NOTE:
Before using any solution to clean the tile, check the manufacturer's warning label to ensure the safety of the product. If there is any doubt, apply several test patches of the solution in an inconspicuous place to determine product suitability.

Grout:

The grout used is a two part concrete mix. It is normal for this type of grout to develop surface cracks over time. In motorhome application, due to the constant flexing of the flooring, this process may accelerate. If the grout requires cleaning, scrub with a plastic brush. Do not use steel wool as small particles may remain and produce unsightly stains.

Sealing the Tile:

Apply sealant to the tile floor and grout to prevent discoloring from soils and spills. One pint of 511 Impregnator sealer, provided with the motorhome, is sufficient to seal the floor. Follow application instructions carefully.

070182

NOTE:
It is recommended to test a small amount of sealant on an inconspicuous area before applying to the entire floor. Avoid getting sealant onto surfaces other than the flooring.

To Apply:

1. Extend slide room(s) and clean floor. Allow floor and grout to thoroughly dry.
2. Working from rear towards doorway, apply sealant direct from container onto a cloth towel or broom handle applicator. Grout sealant applicators are available at large hardware stores.
3. Apply only enough sealant to wet surface. Do not allow sealant to puddle in grout lines. Extra care should be used to make sure all grout has been sealed. Only one application is necessary.
4. Allow five hours to dry. Sealant will fully cure in 72 hours.

NOTE:
If a spill occurs before sealant has cured, it may be necessary to clean and additionally treat area with sealant as needed.

CAUTION:
Product contains petroleum distillate. Open windows, vents and doors to provide adequate airflow during application.

Laminate Floor (Optional)

Laminate flooring used in the motorhome provides style, durability and ease of maintenance. This high-pressure laminated flooring is designed to be incorporated as a floating floor.

Laminate flooring is constructed of three main material components. The surface, similar to many countertops, contains aluminum oxide particles to form an extremely hard, durable outer layer. The carrier, or core layer, is constructed from high density fiberboard. A tongue and groove design provides a tighter bond. The backer or bottom layer is also made of laminate for strength.

Cleaning and Maintenance:

For everyday cleaning, vacuum the floor to remove dirt and debris. It is recommended to occasionally mop the floor using a cotton string mop and a minimal amount of water. Use a mixture of soap-free household cleaner (either vinegar or ammonia work well) and water for a more thorough cleaning.

SHOWER

Showers are susceptible to soap build-up. To control mildew growth, spray the shower with household chlorine bleach. Allow it to stand for five minutes, then rinse with clear water. Clean the glass shower doors with window cleaner on a weekly basis to maintain shine. If water spots cannot be removed from glass, rub lightly with the flat edge of a razor blade to remove deposits.

To prevent excessive moisture and a continual growth of mildew, use the shower only with adequate ventilation. The sealant in a regularly used shower should be replaced once a year. To replace sealant, remove the old sealant using a sharp non-metallic instrument. Apply a new sealant, which can be found at most recreational vehicle supply stores.

CEILING

The ceiling of the motorhome can be a variety of materials or fabrics:

Hardwood Vinyl and Decorated Paneling:

Certain cleaning agents will affect the surface on both printed and unprinted vinyl. Use only a mild, non-abrasive detergent and warm water with a soft cloth or sponge to clean. Do not use bleach, alcohol, oil-based spray cleaners or cleaning agents that contain solvents, citrus oil or harsh chemicals.

Decorative Ceiling Mirror:

Household cleaners, ammoniated detergents or glass cleaners may be used on A-Look Decorative Metals. Use a glass cleaner applied to a soft cloth to clean.

Suede Fabric:

Restore suede surfaces using a soft brush. Remove dust from the suede fabric using the soft brush attachment of a vacuum.

Time is very important when removing substance from wall coverings that are solvent based or contain color. Do not use abrasive cleaners containing chlorine bleach or solvents. Fidelity and Jolie brands are recommended. Always begin with a mild detergent or soap and warm water. To remove normal dirt, clean with a soft sponge. Rinse and wipe dry.

Care for the Tower Wall Covering:

Remove ordinary stains with mild soap and warm water. Sponge on. Rinse well and dry with a soft cloth. **For special cleaning problems:** To remove ball point pen, blood, lipstick, etc., use a sponge or soft bristle brush and *Formula 409*, *Fantastik* or a similar product. Rinse well and dry. Finish cleaning by applying full strength isopropyl alcohol with a sponge or soft brush. Rinse well and dry.

070200

Care for the Satinesque Wall Covering:

Remove stain quickly to minimize the reaction on the wall covering, especially if the stain is solvent-based or pigmented. Examples: nail polish, oil, shampoo, lacquer, enamel, paint, ink and lipstick.

Begin cleaning the stain with a mild soap-based detergent; and if necessary, move to a stronger cleaner such as household bleach, liquid household cleaners or rubbing alcohol. Before applying a stronger cleaner, test the cleaning agent on a small inconspicuous portion of the wallcovering to ensure the cleaner does not affect the color or gloss of the wall covering.

Stain Removal Procedures for Specific Stain Types:

Normal Dirt - Remove normal dirt using a mild soap or detergent and warm water. Allow it to soak for a few minutes then rub briskly with a cloth or sponge.

Nail Polish, Shellac or Lacquer - Remove liquid using a dry cloth. Use care not to spread the stain. Quickly clean the remaining stain with rubbing alcohol. Rinse with clean water.

Ink - Remove immediately by wiping with a cloth dampened in rubbing alcohol. Rinse with clean water.

Chewing Gum - Rub with an ice cube to cool and harden. Gently pull off the bulk of the gum. Remove remaining gum with rubbing alcohol.

Pencil - Erase as much of pencil mark as possible. Wipe remaining marks with rubbing alcohol.

Blood, Feces or Urine - Remove these staining substances as quickly as possible. Wash the stained area with a strong soap. If the stain does not disappear, rinse the soapy area thoroughly with clean water. Mix a solution of 50% water and 50% household bleach. Clean the stained area with the bleach solution. Rinse with clean water.

WOOD CARE

For general cleaning, regularly wipe wood surfaces using a soft cloth lightly dampened with clear warm water, and thoroughly dry to prevent streaking. For stubborn stains, use a clean cloth dampened with a solution of mild non-alkaline soap (dishwashing liquid) and water and rinse. Dry thoroughly, buffing in the direction of the wood grain. Never use abrasive cleaners, scouring pads or powdered cleansers. Polishing products used on the solid wood surface depends on individual preference. Always follow product instructions.

Excessive dampness, dryness, heat, or cold can damage solid wood finishes. Sunlight can change the color or age the wood. Never allow moisture or spills to stand, always blot dry immediately. Solvents, alcohol, nail polish and polish removers, as well as harsh cleaners, should not be used on finished wood surfaces.

Minor damage to solid wood surfaces can be repaired quickly and effectively with a bit of hard work, some careful attention to details, and most importantly, the right materials. However, any wood repair or finishing job is best left for a professionally trained individual.

NOTE:
It is important to inform the service technician of any products used for the care and cleaning in the event of wood repairs.

Sanding and Sandpaper:

The following table is a general guide, but this may vary from wood type to type. The key to sanding is using the right sandpaper for the repair that is needed. Always sand with the grain.

GRIT	GRADE	USE
80-120	Medium	Smoothing the surface, removing small marks.
150-180	Fine	Final sanding prior to finishing.
220-240	Very Fine	Sanding between coats of sealing.
280-320	Extra Fine	Removing dust spots or mark between finish coats.
360-600	Super Fine	Removing luster or surface blemishes.

Steel Wool:

Abrasive material composed of long steel fibers of varying degrees of fineness that are matted together. Coarser grades are used to remove paint and other finishes; the finer grades for polishing or smoothing a finished surface.

Nail Holes and Small Cracks:

Fill nail holes and small cracks with wood putty or dough for unstained woods prior to any sanding. Stained finishes require filling holes and cracks after the stain has been applied. Putty should match the stain closely in color.

TIP:
A little sawdust and wood glue can be used to make putty for end grains.

Scratches and Nicks:

"Quick and simple" rarely describes repairs to stained wood finishes; however, a few tricks used by professional woodworkers can be tried to repair nicks and scratches.

Fixing scratches in stained woodwork:

Light scratches will often disappear when carefully rubbed with furniture polish or paste wax. When scratches appear lighter than the surrounding dark-stained woodwork, it usually means either that the scratch goes through the stain into the wood or that the varnish is flaking off. Deeper scratches can be hidden by carefully rubbing with a piece of oily nut meat such as Brazil nut, black walnut or pecan. Be careful to rub the nut meat directly into the scratch to avoid darkening of the surrounding wood. Color the scratch with brown coloring crayon or liquid shoe dye (especially good on walnut). Always test a procedure on an inconspicuous area on the wood to ensure no damages to the finish occurs.

Staining the scratch with iodine:

Mahogany - Use new iodine.

Brown or Cherry Mahogany - Use iodine that has turned dark brown.

Maple -Dilute one part iodine with one part denatured alcohol.

Commercial scratch removers, or stick wax to match the wood finish, can also be used. After the scratch has been hidden, polish or wax the entire area. Deep scratches should be repaired and finished by a professional.

Dents:

Small dents may be repaired by using steam. To raise a small dent, place a damp cloth over the area and hold a medium-hot iron on it. The steam causes the wood fibers to swell back into place. It may be necessary to repeat this process until the dented area is level with the surface. Allow the area to dry.

Restoring the clear finish:

Check the scratches carefully. If flaking varnish is visible with dark-stained wood underneath, only the clear finish may need to be restored. Rub the loose varnish with fine steel wool or fine synthetic steel wool until you have removed the flaking varnish and slightly roughened a small area of the finish surrounding the scratch. With the tip of a rag, a small brush, or even a cotton swab, apply a thin coat of wipe-on finish. Apply finish to the damaged area only. Several coats may be needed to hide the scratch.

Re-staining the wood:

If bare wood is visible at the bottom of the scratch, the wood will need to be re-stained. To remove damaged varnish, lightly roughen a small area around the scratch with sandpaper, steel wool or synthetic steel wool. Find a stain that is a shade lighter than the wood finish. Stain the bare wood with a very small amount of stain on a rag, brush or cotton swab. If the color is too light, apply several coats. Rub away excess stain with a dry rag. If the wood becomes too dark, use a rag moistened in mineral sprits to lighten the wood. Select a lighter color stain and continue.

Several companies have simplified this repair process by designing oil-based wood stain into marker-like containers to rub on to the scratch. Start with a stain color that is lighter than the original finish, because torn and scratched wood fibers will absorb stain and darken quickly. A second coat can always be applied if the color of the first coat is too light. Once the color is blended, patch the clear finish as described above and apply a wipe-on finish.

COUNTERTOPS
Solid Surface

Guidelines to maintain the countertop surface:

Routine Care:
The motorhome solid surface countertops and sinks have a matte/satin finish. Soapy water or ammonia-based cleaners will remove most dirt and stains from all tops and bowls. Individual techniques may be used to remove different stains. Follow the recommendations below.

Cleaning the Countertops:
- Most dirt and stains: Use soapy water or ammonia-based cleaner.
- Water marks: Wipe with damp cloth and towel dry.
- Difficult stains: Use soft scrub and a Grey *Scotchbrite* Pad.
- Disinfecting: Occasionally wipe surface with diluted household bleach (one part water and one part bleach).

Cleaning the Solid Surfaces Sink:
Occasionally clean by using *Soft Scrub Liquid Cleanser* and a Grey *Scotchbrite* pad. Scrub the sink, rinse and towel dry.

Removing Cuts and Scratches:
Solid Surface countertops are completely renewable. Use the following instructions to remove minor cuts and scratches.

- Sand with 180 grit sandpaper, followed by 320 grit, until the scratch is gone.
- Restore the finish using a Grey *Scotchbrite* pad. Never sand hard in one small area. Feather out lightly to blend restoration.

Preventing Heat Damage:
Hot pans and heat-generating appliances, such as frying pans or crockpots, can damage the surface. To prevent heat damage, always use a hot pad or a trivet with rubber feet to protect the surface.

Other Important Tips:
Avoid using strong chemicals on the Solid Surface such as paint removers or oven cleaners. If these chemicals come in contact with the Solid Surface, quickly wash with water. Avoid contact with nail polish or nail polish remover. If contact is made, quickly wash with water.

NOTE:
Do not cut directly on the solid surface. When pouring boiling water into the Solid Surface sink, run cold water to prevent damage.

STAINLESS STEEL SURFACES

Clean stainless steel once a week with a damp sponge. Apply stainless steel cleaner/polish with the grain, not across, using a non-abrasive cloth or sponge. Do not use steel wool, a wire brush or abrasive sponge pad as these will mar the finish. Cleaner containing chloride is not recommended; however, if used, thoroughly rinse the surface to prevent corrosion. To avoid water spots, do not allow water to evaporate on the surface.

WINDOWS

Water Spots:

Glass will develop water spots if not properly cleaned. Water spots are magnified when the glass has a reflective finish. Use a squeegee immediately after washing to reduce water spotting. To remove stubborn water stains from reflective glass we recommend *Cerium Oxide Polishing Compound*, made by C.R. Lawrence, available at most glass shops.

Condensation

Condensation occurs from water vapor present in the air. More vapor is added by breathing, bathing, cooking, etc. and collects wherever there is available air space. When the temperature reaches the dew point, the water vapor in the air condenses and changes to liquid form.

Controlling Moisture Condensation:

Reduce or eliminate interior moisture condensation during cold weather by using the following steps:

- Partially open the roof vents and windows so that outside air can circulate into the interior. Increase the ventilation when large numbers of people are in the motorhome. Even in raining or snowing conditions the air outside will be far drier than the interior air.
- Install a dehumidifier. Continuous use of a dehumidifier is effective in removing excess moisture from interior air. Using a dehumidifier is not a cure-all, however, it will reduce the amount of outside air needed for ventilation.
- Run the range vent fan when cooking and the bath vent fan (or open the bath vent) when bathing, to reduce water vapor. Avoid excessive boiling or use of steam producing hot water.
- Do not heat the motorhome interior with the range or oven. Heating with the range or oven increases the risk of toxic fumes and depletes oxygen. Open flames also add moisture to the interior air and increase condensation.
- In very cold weather, leave cabinet and closet doors partially open. Air flow will warm and ventilate the interior storage compartments and exterior walls to reduce or eliminate condensation and prevent the possibility of ice formations.

WINDOW TREATMENTS
Mini-blinds

Dusting:
Regular dusting will maintain the appearance of the mini-blinds. Keep aluminum blinds looking their best by periodically wiping them with a soft cloth or a dusting mitt. By tilting the slats down, not quite closed, most of the top surface of each slat can be cleaned. Blinds may be cleaned while hanging in place using this method.

Vacuuming:
For deeper cleaning, vacuum gently with a soft brush attachment of a vacuum cleaner.

Compressed Air or Hair Dryer (non-heat setting):
Blow dust off each slat. Dust will be air-borne using this method so ventilate the motorhome.

Spot-Cleaning:
Spot-clean shades and blinds using a soft cloth or a moistened sponge with lukewarm water. Add mild detergent, if needed. Blot gently to avoid creasing. In a dusty environment, the blinds may need to be cleaned regularly using a sponge or dampened soft cloth. Use warm (not hot) water and a mild detergent. The mild detergent cannot contain abrasives. Rinse the blinds using a clean cloth and water to prevent water spots. Place a towel directly under the blinds to absorb water that might drip down.

Ultrasonic cleaning:
Professional ultrasonic cleaning may be preferred.

Day/Night Shades

Guidelines for care and maintenance of polyester blended the day/night shades:
- Leave Day-Night shades in the **UP** position when not in use to help the shades hold their shape.
- String tension for the shades should be equal. The tension can be adjusted if the shades will not remain up.

Dusting:
Vacuum with a brush attachment, or use a dusting tool, on a regular basis.

Cleaning:
A dry foam cleaner may be used for soil and dirt removal. Follow all directions on the container, or a cleaning solution of ¼ ounce clear liquid soap to 8 ounces water.

NOTE:
Do not use colored liquid soap as a stain may appear when fabric dries.

What is Mold?

Mold is a type of fungus that occurs naturally in the environment. Mold spreads by means of microscopic spores borne on the wind, and is found everywhere life can be supported. Motorhome construction is not, and cannot be, designed to exclude mold spores. If the conditions are right, mold can grow in the motorhome. Most people are familiar with mold growth in the form of bread mold, and mildew that may grow on bathroom tile. Mold spores, as they grow, can leave a musty odor, discolor fabrics, stain surfaces, and cause considerable damage.

What Does Mold Need to Grow?

Mold requires a food source to grow. Grease films contain nutrients to cultivate mold spores. Soil on items such as fabrics and furniture may also supply nutrients for mold growth. Synthetic fabrics, such as acetate, polyester, acrylic and nylon, are mildew resistant, but soil on the surface of these fabrics are susceptible to mold.

Temperate climate and moisture help to cultivate mold growth. Moisture in the motorhome can result from unattended spills, leaks, overflows, and condensation. Moisture allowed to remain on a growth medium can develop mold within 24 to 48 hours. Minimizing moisture inside of the motorhome can reduce or eliminate favorable mold growth conditions. Good housekeeping and regular maintenance are essential in the effort to prevent or eliminate mold growth.

Consequences of Mold:

All mold is not necessarily harmful, but certain strains of mold have been shown to cause, in susceptible persons, allergic reactions, including skin irritation, watery eyes, runny noise, coughing, sneezing, congestion, sore throat and headache. Individuals with suppressed immune systems may risk infections. Some experts contend that mold causes serious symptoms and disease which may even be life threatening. However, experts disagree about the level of mold exposure that may cause health problems, and about the exact nature and extent of the health problems that may be caused by mold. Moreover, the Center for Disease Control states that a casual link between the presence of toxic mold and serious health conditions has not been proven.

Standards or threshold limit values for concentration of mold or mold spores have not been set. Currently, there are no EPA regulations or standards for airborne mold contaminants. There is simply no practical way to eliminate all mold and mold spores in the indoor environment. For example, studies have shown that ozone cleaners are not effective at killing airborne mold or surface mold contamination.

Controlling Mold Growth:

The motorhome owner can, and should, reduce or eliminate the occurrence of mold growth in the motorhome; thereby, minimizing any possible adverse effects. Take the following steps to help reduce or eliminate mold growth in the motorhome.

1. Check for signs of mold prior to bringing items in the motorhome. Potted plants (roots and soil), furnishings, or stored clothing and bedding material, as well as many other household goods, may already contain mold growth.
2. Regular vacuuming and cleaning will help reduce mold levels. Mild bleach solutions and most tile cleaners are effective in eliminating or preventing mold growth.
3. Indoor humidity can be reduced by 30 to 60% when venting clothes dryers to the outdoors. Ventilate the kitchen and bathroom by opening windows, using exhaust fans or a combination of both. Operating the air conditioning will remove excess moisture in the air, and help facilitate evaporation of water from wet surfaces.
4. Promptly clean up spills, condensation and other sources of moisture. Thoroughly dry any wet surfaces or material. Do not let water pool or stand in the motorhome. Promptly replace materials that cannot be thoroughly dried.
5. Inspect for leaks on a regular basis. Look for discolorations or wet spots. Repair leaks promptly. Inspect condensation pans (refrigerators and air conditioners) for mold growth. Take notice of musty odors, and any visible signs of mold.
6. Should mold develop, thoroughly clean the affected area with a mild solution of bleach. First, test to see if the affected material or surface is color safe. Should mold growth be severe, call on the services of a qualified professional cleaner.
7. If mold cannot be removed from an item, properly disposed of it.

Whether or not a motorhome owner experiences mold growth depends largely on how the motorhome is managed and maintained. As a manufacturer, our responsibility is limited to things that we can control. As explained in the written warranty, we will repair or replace defects in the construction (defects defined as a failure to comply with reasonable standards of motorhome construction) for the Limited Warranty coverage period provided. **THE MANUFACTURER WILL NOT BE RESPONSIBLE FOR DAMAGE CAUSED BY MOLD THAT MAY BE THE CONSEQUENCE OF OR ASSOCIATED WITH DEFECTS IN THE CONSTRUCTION.**

PEST CONTROL

Regardless of the area one lives in or travels to, it is safe in stating there will be pests waiting. These pests are not only annoying; they can pose a health risk and create serious damage to the motorhome.

- Common pests include insects such as ants, cockroaches, termites, flies, pantry pests and wasps as well as wildlife such as rodents, raccoons, bats, birds and snakes. It is important to remember that pests are searching for food, water and a place to live. Eliminating any one of those elements will help control the pest infestation. Take immediate steps to remove pests as soon as their presence is detected.

Steps to help control pests:

- Reduce the clutter inside the motorhome and storage bays. All storage items, particularly food (including pet food), should be kept in tightly sealed containers. Seal all cracks and holes, and insure that window, door and vent screens are securely in place.
- Routinely clean the motorhome, including storage bays. Wipe down the water bay. Promptly remove all crumbs from areas where food is regularly prepared and eaten. Garbage should be placed in a sealed container and removed to an outside receptacle daily. Only put out pet food that will be immediately eaten.
- Keep foods such as flour, cereal, spaghetti and pet food in re-sealable containers with tight lids.
- Sweep and vacuum often (especially in eating areas) to help eliminate a food source for pests.
- Seal cracks, crevices, and gaps around doors and windows. Ensure all windows and doors are screened and that the screens fit snug in the frames.
- Many pests need moisture to successfully live and reproduce. Limit their access to water or moisture sources by sealing any cracks and leaks in pipes and faucets. Reduce moisture in the motorhome by controlling condensation, immediately wiping up spills and promptly repairing leaks. Be extra alert around areas that attract rodents and insects, including the sewer hose, fresh water hose, bay doors and items that may be leaning against the outside of the motorhome, such as fishing poles and golf clubs.
- When the motorhome is stored outdoors, clear the surrounding area of all rodent friendly hiding places - shrubs, trees and clutter. Completely seal the underside of the motorhome. Wire mesh will work well to prevent points of entry, but beware of blocking necessary air vents. Prior to operating the motorhome after storage, remove all insect and animal nests that may have developed around vents, engine compartments, the exhaust pipe and in the wheel wells.

Rodents:

Rodents may chew through wires or build nests in components of the motorhome. Signs of rodent infestation include droppings, shredded material or chewed furniture fabrics and vinyl. Rodents like to build nests with wire insulation, and are commonly attracted to the outside coating of 120 Volt AC wiring more than 12 DC Volt wiring.

NOTE:
Although the back cap of the motorhomes is well sealed, rodents are capable of chewing through the foam insulation and that area should be routinely inspected.

If there are signs of rodent infestation around the motorhome, place traps or poisons in suspected areas. Keep the traps and poisons safely away from pets and children. Cheese is not the best bait for a rodent trap. Use peanut butter or chocolate in small amounts. Place the bait on the trigger of the trap to induce the rodent to climb onto the trigger to reach the bait. Rodents do not limit invasion to unused vehicles.

Insects:

Eliminate insects when signs of infestation appear. If you are unable to identify the type of insect, purchase sticky traps from the hardware store and place the tape where the insects have been seen. Once a sample is caught, seek assistance in identifying the insect to determine what will be required to remove the infestation.

Regularly inspect the exterior of the motorhome for signs of a budding wasp nest, and promptly destroy small nests before they become too large.

Spiders can be in any structure. Immediately remove spider webs. Some types of spiders like to nest on top of the diesel tank and around the diesel hoses. Dispense of spiders using a vacuum. Use care to capture the spider and egg sacs. Throw the vacuum bag away in a sealed bag.

Fruit flies invade the motorhome by attaching to fresh fruits and vegetables. Determine what food items are generating the flies and discard that item in an outdoor trash receptacle. Fruit flies can be eliminated with a homemade trap. Pour a few ounces of vinegar into a cup and cover the cup with plastic wrap. Secure the wrap with tape or a rubber band and poke a ¼" hole in the plastic. Place the trap in the area where fruit flies are present.

Ants live in colonies. Only a fraction of the ant colony will leave to seek food. Spraying pesticides will only kill the ants that are away from the colony. To eliminate all ants, the colony must be destroyed. Keep ants away from the sewer hose by spraying the hose ends with a soap and water solution.

Fleas can be removed by properly treating pets with a veterinarian approved treatment and by thoroughly cleaning the motorhome. Vacuum vinyl areas and tile floors to remove dust, flea larva and flea eggs. Follow by thoroughly washing those areas with soap and water. Carpets must be vacuumed and treated with a residual flea control product labeled safe for indoor carpet and furniture use. Perform the cleaning treatment daily for three days to ensure that all fleas have encountered the treatment.

Flying outdoor insects are attracted to bright light. Yellow porch light covers on the motorhome work to discourage insect invasion. During nighttime hours insects will be attracted to docking lights, or other bright exterior lighting.

If the presence of moths is detected inside of the motorhome, usually by holes appearing in material, clean the affected clothing and all other items stored in the same area. Follow by completely cleaning the closet, dresser or storage area. If cracks are detected, seal the cracks and treat the area with a properly labeled indoor pest control product.

Birds:

Even birds can be considered pests, particularly when the motorhome is parked in the flight path of a flock. Bird droppings are hard to remove and will leave stains. Prevent permanent staining to the motorhome roof by regularly cleaning the surface to remove all bird droppings.

Damage from Pests:

Lizards have been known to crawl into the inverter and short out the circuit board. Lizards can be captured using glue traps. To remove the lizard from the trap, dissolve the glue with vegetable oil and release it outside and well away from the motorhome. A scorpion will glow blue-green in UV light. If the presence of scorpions in the motorhome is suspected, investigate with an UV black light during the nighttime hours.

Best sources of information about common household pests:

The Internet is a great place to find information about common pests, however, the information is not always correct. The National Pest Management Association website can be useful resource about common pests. Another good source for information are colleges and universities with entomology (study of insects) departments.

Electronic pest control devices can be costly and most likely will not work on all types of rodents and insects. When calling on the services of a professional to combat pest infestation, call a reputable business that is licensed in handling pesticides. Check references. Explain that you are seeking assistance for a motorhome, as treatments may differ from standard household jobs.

If a pest problem is suspected in the motorhome, consider professional pest control help. The following guidelines can be used for selecting a pest control service.

- Seek referrals from those who have used pest control services. Inquire about the type of pest problem encountered and if they were satisfied with the service.
- Membership in the national, state or local pest control associations is a good indicator that the company has access to modern technical information and is committed to further education.
- Reach a complete understanding with the company before work starts; find out what the pest is, how the problem will be treated, how long the period of treatment will be, and what results can be expected.
- Be sure to understand what is guaranteed and what is not.

STORAGE
Short Term

Short term storage is defined as storing the motorhome for a period of thirty days or less. Properly preparing the motorhome during periods of short term storage will make bringing the motorhome out of storage a much easier process. Winterize the plumbing system if the motorhome is stored in winter months, or if stored when temperatures are below 32º F.

Checklist - Short Term Storage:

- Retract the slide rooms. Do not store the motorhome with slide rooms extended.
- Shut off all appliances. Close the primary LP-Gas valve.
- Remove all articles from refrigerator/freezer and clean thoroughly. Prop doors open to prevent mildew.
- Holding tanks should be drained and fresh water system winterized with potable antifreeze or winterize the plumbing system using air pressure.
- Retract and secure all awnings.
- Turn **OFF** the interior house power.
- Cancel the Automatic Generator Start program.
- Batteries should be stored fully charged. Batteries stored in a discharged state will readily freeze.
- If possible, park the motorhome so that the batteries are accessible for charging or changing without having to move the motorhome.
- If available, leave the motorhome hooked to shore power. Leave the main battery disconnect switches **ON**.
- Careful placement of a small heat source in the interior will help control moisture. Desiccate filter systems will help remove interior moisture.
- If AC power is not available, turn the chassis battery disconnect switch **OFF**.
- If possible, store the motorhome inside a storage building.
- If stored outside, inspect all seams and seals bi-monthly for possible leakage.
- Store the motorhome with a full fuel tank to minimize moisture condensing at top of fuel tank.
- Vents and windows should be closed to prevent wind driven rain entrance.
- Tires should be stored at maximum inflation pressure.
- A full interior **inspection** for water leaks should be made bi-monthly. Be sure to check behind all cabinet doors and drawers.

Long term storage of the motorhome can be defined as leaving a motorhome unattended for a period of thirty days or more. A motorhome requires protection from the elements just as a house or a car would. When left out in the environment without proper storage or maintenance, a motorhome, house or car is vulnerable to the moisture and oxidation processes inherent in the environment.

NOTE:
The natural process of moisture in the air condensing will occur with temperature changes of 30º F or more in one day. Humidity readings of 60% or greater will allow the accumulated moisture to remain for extended periods of time.

If AC power is not available in storage area:

- Turn off all the appliances.
- Turn off the interior battery disconnect switch.
- If possible, situate the motorhome so the batteries remain accessible. This allows a battery to be charged or replaced without moving the motorhome.
- Charge the batteries to a full state of charge.
- Cancel the Automatic Generator Start program.
- Turn the main battery disconnects OFF.
- When stored outside, use the Aladdin™ system to make a quick reference check of the battery voltage while the motorhome is in storage. If the motorhome is stored outside, solar panels may offset the parasitic loads. Preventative measures should be used if the voltage readings are low. Removing the motorhome from storage or moving the motorhome in case of an emergency will be a much easier process.

NOTE:
Batteries in a low state of charge will readily freeze. Freezing will damage the battery.

If AC power is available:

The chassis battery disconnect switch will remain **ON**. The inverter will charge both house and engine battery banks. A 30 Amp shore power service will be more than adequate.

CAUTION:
A 20 Amp service using light duty extension cords and the required adapters create serious voltage losses. Line voltage loss and the resistance at each electrical connection is a hazardous combination and should be avoided. Damage to sensitive electronic equipment may result!

Type of surface to park and store the motorhome on:

- Parking the motorhome on a grass surface, with the tires supported by blocks, is a perfect situation for moisture to accumulate.
- A gravel parking area still allows moisture to evaporate from the ground, through the gravel and to the underside of the motorhome.
- Concrete pads seal the surface allowing better ventilation under the motorhome.
- Storage buildings with concrete floors, or heated storage facilities, greatly reduce the amount of moisture accumulation and protects the motorhome from moisture damage.

Outdoor Storage Area:

- The interior should be heated to help prevent mold and mildew growth. Moisture removing desiccate filter systems are available from hardware and RV supply stores. Place the filter system inside the motorhome to reduce interior moisture condensation or humidity.
- Proper winterization of the fresh water system will prevent potential damage in extreme cold.
- Ultraviolet radiation affects soft goods and rubber products such as privacy curtains, window shades and tires. These items should be protected. Store Day/Night Shades in the **Up** position.
- Cardboard templates can be made for the windows to protect the interior from exposure to direct sunlight.
- Tire covers are available to protect the sidewall of the tires from cracking. Make sure tires in storage contain the correct air pressure to prevent damaged caused by underinflation.
- Regularly washing the exterior to help control moss accumulation. Waxing the motorhome twice a year will augment these substances.

Inspect the motorhome:

- Perform a full interior inspection for water leaks every two weeks while the motorhome is in storage. Check inside all cabinets for signs of dampness or leaks. Inspect the ceiling areas around roof vents or other roof openings.
- The roof and sidewall seams should be inspected and cleaned at least twice a year. Inspect for exterior sealant gaps of all roof seams, vents, skylights, roof air conditioners and windows.

Fuel:

Storing the motorhome with a full tank of fuel will minimize moisture condensing at the top of the tank. Diesel fuel is an organic material which will develop a microbe growth (black slime). Fuel stabilizers may be added to control microbe growth and degrading of the fuel. Consult the engine manufacturer's owner's manual or a distributor for further detailed information on fuel stabilizers and additives.

Brakes:

Brakes suffer from non-use during periods of storage. The bare metal machined surfaces of brake drums or rotors have only a light coating of dust from the brake lining friction material. The brake dust is the only thing protecting the bare metal surfaces from rusting. Only regular brake applications dry the moisture preventing rust on brake drum or rotor surfaces. During periods of non-use, oxygen and moisture oxidize the machined surfaces. Only occasional use keeps these surfaces from oxidizing. Rusty brake drum or rotor surfaces permeate the brake lining upon the first few applications, reducing the friction action of the linings.

Engine:

Internal combustion engines need to be "exercised" on a regular basis to ensure an adequate supply of lubricating oil coats the cylinder walls and piston rings. Valve and valve seat surfaces also suffer from non-use. Some valves will remain open depending at which part of the combustion cycle the engine has stopped. The heat and cold of the day allows moisture to accumulate through the exhaust system. Start the generator at least once a month.

Electric Motors:

Electric motors in the motorhome should be occasionally operated to help lubricate and keep surfaces rotating freely. These items include the roof air conditioners, dash fans, dash blower motor, Aqua-Hot motors, heat exchangers and powered roof vents.

Winter Storage Checklist

- **Plumbing Lines** - Drain and protect. (See *Winterizing* - Section 6)
- **Fresh Water Tank -** Drain.
- **Body -** Clean and wax. Oil locks and hinges. Repair roof seams as needed.
- **Countertop and Cabinets -** Wash with mild soap and water.
- **Curtains -** Remove and clean according to care specifications.
- **Windows -** Cover windows by pulling blinds, closing shades or using a separate cover such as a sheet.
- **Holding Tank -** Drain and rinse. Close valves.

NOTE:
Add a small amount of antifreeze to waste holding tanks to keep valves and gaskets lubricated.

- **Drain Traps** - Pour RV antifreeze down all drains.
- **Refrigerator -** Clean and leave both doors propped open. Cover exterior panels and roof vents.
- **Batteries -** Add distilled water and recharge if needed. If necessary, disconnect the cables, remove the batteries and store them in a cool dry place. Check and recharge as needed.
- **Air Conditioner -** Remove the air filters. Clean or replace.
- **Roof -** Keep clear of snow accumulation or damage may occur.
- **Interior/Exterior -** Storing under cover or indoors helps extend interior and exterior life.
- **Fuel Tank -** Diesel fuel tank should be full of fuel.

Removal from Storage

If the motorhome was properly and carefully prepared for storage, removing from storage will not be difficult. The following checklist pertains to items or areas which should be checked before operating or moving the motorhome. If the motorhome was not properly winterized, extensive freeze damage or other serious deterioration may have occurred. Consult a dealer or an authorized service center for advice.

- Thoroughly **inspect** the outside of motorhome. Look for animal nests in the wheel wells or in other out of the way places.
- Remove all appliance flue vent covers, ceiling vent covers and air conditioning covers. Be sure the refrigerator openings are free of debris, insect nests, webs, etc.
- Open all doors and compartments. Check for animal or insect intrusion, water damage or other types of damage which may have occurred.
- Check the state of charge of the batteries. If necessary fill the cells with distilled water only and charge as necessary. Inspect the cable ends and terminals. They should be clean and free of corrosion.
- Check all the chassis fluid levels: engine oil, engine coolant, hydraulic fluid reservoir, transmission oil and rear axle oil.
- Start the engine, allowing it to reach operating temperature. Ensure the engine instruments are indicating proper readings.
- While the engine is running check the operation of headlights, taillights, turn signals, back-up lights, license plate light and emergency flasher. Operate the dash air conditioner. If the air conditioner does not work, or the compressor makes unusual noises, have the system checked by a qualified air conditioner technician.
- Shut the engine down. Adjust or add fluids as necessary. **Inspect** the engine for fluid leaks. Look under the motorhome for fluid leaks.
- Drain, sanitize and flush the fresh water system as outlined in the ***Water Systems - Section 6***. **Inspect** the sewer drain hose and connections for leaks. Replace if necessary.
- Operate all faucets and fixtures in the fresh water system. Run a sufficient amount of fresh water through all the water lines and faucets to thoroughly purge any potable antifreeze from the fresh water system.

NOTE:
Discard at least the first two trays of ice from the icemaker to ensure the ice does not contain traces of antifreeze or other contaminates.

- Open cabinet doors and drawers. Inspect for water leaks at joints or fittings. Repair as necessary.
- Operate all 12 Volt DC lights and accessories. If something does not work there may be a bad 12 Volt circuit breaker or blown fuse.

- Install new batteries in battery operated safety detectors or devices. Test the Carbon Monoxide, LP-Gas and smoke detectors for proper operation.
- Check that the monitor panel is properly functioning.
- Inspect the 120 Volt AC electrical system which includes the power cord, inverter/converter, all outlets and exposed wiring.

NOTE:
Prepare the generator for operation following the instructions in the Generator Manual.

- Start and run the generator.
- Confirm that the batteries are charging. Operate the 120 Volt AC appliances and air conditioners. If an electrical item or appliance is not properly functioning, contact the dealer or an authorized service center to have it evaluated.
- Have a qualified technician **inspect** the LP-Gas system and perform an LP-Gas leak test. The leak test should also include an LP-Gas regulator adjustment (if needed). The test can also verify if the regulator is faulty and should be replaced. Have the LP-Gas tank inspected.
- Operate each LP-Gas appliance. Observe all burner/pilot flames for proper color and size.
- **Inspect** and clean the interior.
- Check the sealant around all roof and body seams and windows. Reseal if necessary.
- **Lubricate** all the exterior locks, hinges and latches with a graphite lubricant.
- Check the windshield wiper blade condition. Check the wiper/washer operation.
- Wash and wax the exterior. Check the body for scratches or other damage; touch up or repair as necessary. Flush the underside thoroughly.
- Run through the operational checks for steering, brakes, engine and transmission. Operate the motorhome slowly during these checks to allow sufficient circulation of fluids and resetting of the components.
- If desired, have the dealer or repair center double-check preparation to make necessary adjustments and/or correct defects.

~ NOTES ~

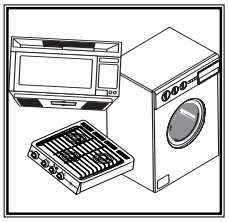

Signature 2005

Appliances • Section 4

APPLIANCES - INTRODUCTION 161
REFRIGERATOR 161
Operation Specifics 162
Control Panel 163
Icemaker 164
Refrigerator Alarm 165
Cooling Unit Fans 165
Doors 165
Storage Procedures 166
Interior Light 166
Service 167
Air in LP-Gas Supply Lines 167
REFRIGERATOR - RESIDENTIAL (Opt.) 167
WATER DISPENSER - HOT 170
MICROWAVE/CONVECTION OVEN 172
Setting the Clock 173
Cleaning the Microwave/Convection Oven 173
AUTOMATIC APPLIANCE SELECTOR 176
COOKTOP 177
Care & Cleaning 178
COOKTOP - ALL ELECTRIC (Opt.) 179
WALL THERMOSTAT 180
AIR CONDITIONING - ROOF 181
Operations 181
Return Air Filters 183
AQUA-HOT 185
Fuel Filter/Water Separator 190
Aqua-Hot Overview 191
ELECTRIC BASEBOARD HEATER (Opt.) 192
WASHER-DRYER 193
Test Procedure 193
Washer-Dryer Maintenance 195
Winterizing the Washer-Dryer 196
WASHER (Opt.) 197
Test Cycle 198
Operating Instructions 198
Cleaning the Washer 200
Winterizing the Washer 200
DRYER (Opt.) 201
Dryer Operation 201
Dryer Maintenance 202
DISHWASHER (Opt.) 203

APPLIANCES - INTRODUCTION

This section covers operation and care of various appliances found in the motorhome: a refrigerator, cooktop range, microwave, Aqua-Hot, roof air conditioner and optional appliances. These appliances operate on AC or DC current, LP-Gas or a combination of the three.

INFORMATION:
Detailed information with CAUTION or WARNING instructions for the various appliances, other than what is found in this section, can be found in the manufacturer manuals.

WARNING:
Before entering any type of refueling station turn off all LP-Gas operated appliances. Most LP-Gas appliances used in recreational vehicles are vented to the outside. When parked close to a gasoline pump it is possible for fuel vapors to enter this type of appliance and ignite, resulting in an explosion or fire.

WARNING:
Carbon Monoxide gas may cause nausea, fainting or death. Operating an LP-Gas appliance with inadequate ventilation or partial blockage of the flue can result in Carbon Monoxide poisoning. Do not store flammable liquids such as lighter fluid, gasoline or propane in the outside refrigerator compartment.

NOTE:
Features and options vary with floorplans.

REFRIGERATOR

The refrigerant is heated to circulate and vaporize using gravity. To ensure longevity and proper operation of the refrigerator, follow the specific guidelines in the refrigerator manual. With proper care and maintenance, the refrigerator should provide years of trouble-free service.

INFORMATION:
Refer to the refrigerator manual for detailed operating and maintenance instructions.

NOTE:
To reduce the possibility of food spoilage, keep the interior box temperature at or below 40º F. The refrigerator will consume more energy to maintain low temperature, especially in hot, humid climates. Lower temperature may also lead to quicker frost build-up.

Operation Specifics

- The refrigerator operates from LP-Gas or 120 Volts AC electric.
- DC Voltage for control pad operation must be no higher than 15.4 Volts DC or lower than 10.5 Volts DC.
- AC voltage must be no higher than 132 Volts AC or lower than 108 Volts AC.
- **Important:** Operate refrigerator only when level. Level the refrigerator, (from front view) within 3º side-to-side and 6º front-to-back, using a torpedo or bulls eye (fence post) level. Place the level on the freezer plate. The level should be within the circle by a half of a bubble. Generally, this is within comfortable living conditions.

CAUTION:
Operating the refrigerator "off level" separates chemicals, causing them to crystallize and block the circulation action of the cooling unit. Damage is cumulative and irreversible.

WARNING:
Do not use the refrigerator if there is an ammonia smell inside or outside of the refrigerator, or if a yellowish substance appears inside or at the outside access compartment. This can be an indication of a refrigerant leak. Contact an authorized repair facility.

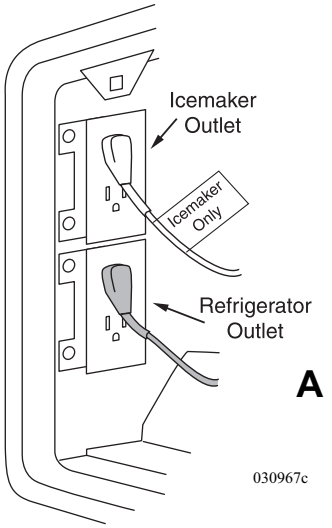

For the refrigerator to operate:
- The house batteries must be charged.
- The battery cut-off switch must be on.
- The primary LP-Gas valve must be on, the electric gas valve must be on or an AC source must be available.
- **Figure A:** The refrigerator 120 Volt AC cord(s) must be plugged in (located outside behind refrigerator access door).
- **Figure B:** The water valve must be open if the refrigerator is equipped with an icemaker.
- **Figure C:** If controls do not light up, check house batteries charge status or see if the 12 Volt DC wires are plugged into the refrigerator's circuit board (located outside behind refrigerator access door).

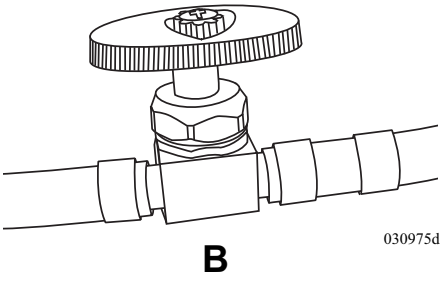

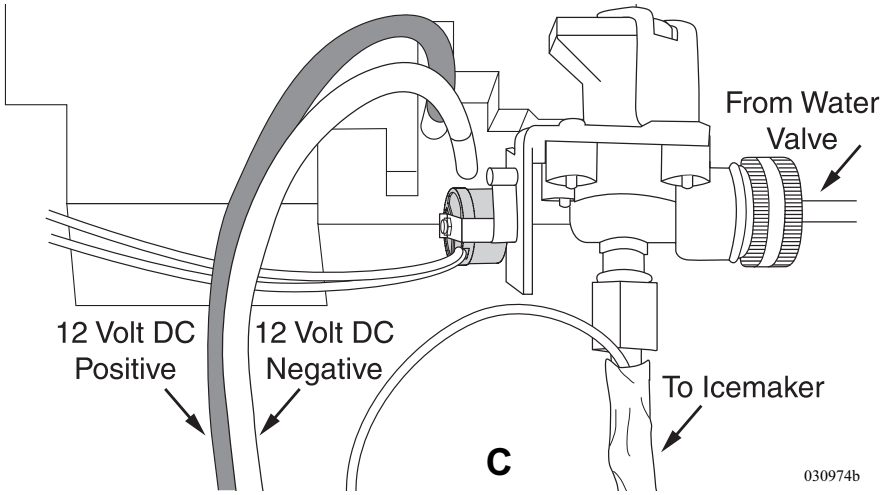

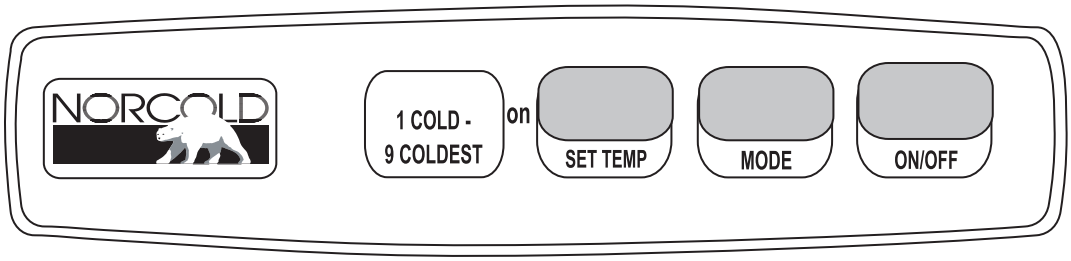

The Refrigerator Control Panel requires 12 Volt DC to operate.

030864d

• **ON/OFF** Button - Turns the refrigerator on or off.
- Push the **ON/OFF** button to start the refrigerator in Auto mode.
- Push and hold the **ON/OFF** button for two seconds to shut it off.

• **LED Display** - This screen is used for mode, temperature and fault code display.

• **MODE** Button - Controls the operation mode of the refrigerator.
- Press the **MODE** button to select between Automatic AU, AC or LP operation.

• **SET TEMP** Button - Adjusts the temperature.
- To adjust push and hold the **SET TEMP** button.
- Number "9" is the coldest setting.

Manual Mode:
When one of the two manual modes is selected:
1. **AC** = The refrigerator is operating on AC electric.
2. **LP** = The refrigerator is operating on LP-Gas.

Automatic Mode (AU):
This feature selects AC over LP-Gas operation. If AC discontinues, the alarm sounds and the refrigerator switches to LP-Gas operation. If the refrigerator fails to light, the alarm sounds and a code displays.

• Press the **MODE** button until **AU** displays.
• Press and hold the **SET TEMP** button until the desired temperature displays. Release button.
• In **AUTO** mode, **AU/AC** or **AU/LP** will alternate three times when a mode has changed.

If the LP-Gas does not ignite within 30 seconds, the control changes to a different energy source or the gas safety valve closes and “NO” “FL” displays. Turn the refrigerator off then back on. If the gas does not ignite after several attempts consult a dealer or authorized Norcold service center.

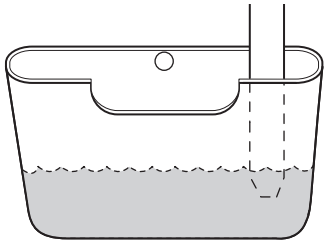

Drip Pan: Located behind the outside access.

Tips:

- Cool items first, if possible, before putting them into the refrigerator.
- Keep the doors shut. Know what you want before opening the doors.
- Allow the refrigerator 24 hours of operation before actual use to help get a "head start" with the refrigeration process.
- A box of open baking soda will help absorb food odors.
- Refrigerator icing can be slowed in high humidity if the end of the drain tube is submersed in drip pan.

Icemaker

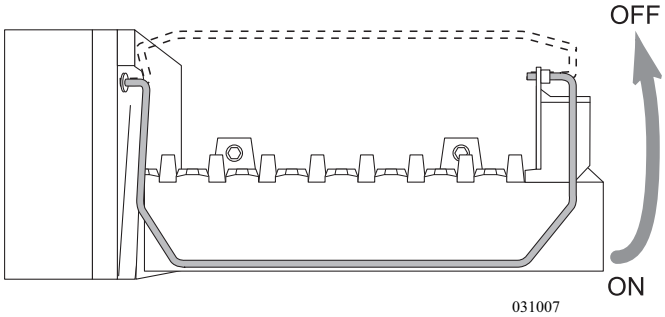

The icemaker requires 120 Volts AC to operate. Only after the freezer reaches freezing temperature will the icemaker function. City water or the water pump must be on and the valve for the water supply line to the icemaker must be on.

- Pull the metal arm (bail) down to turn the icemaker on.
- Push the arm up to turn the icemaker off.

<u>NOTE:</u>
If the icemaker is in operation while the motorhome is in motion, water may spill out of the ice tray. Raise the icemaker arm to stop ice production while in transit. Do not use the first one or two trays of ice if the refrigerator has been in storage. Ice cubes may have contaminates. Do not operate the icemaker without water pressure supplied to the refrigerator as this can damage the icemaker assembly.

Water Line Heater:

A thermal disc supplies voltage to heater tape when ambient temperature is less then 38° F (+/- 4°) and shuts off at temperature greater than 48° F (+/- 5°). The water line heater is only for the line from the solenoid to the icemaker. The line from the icemaker shut-off valve to the water valve is protected with foam insulation.

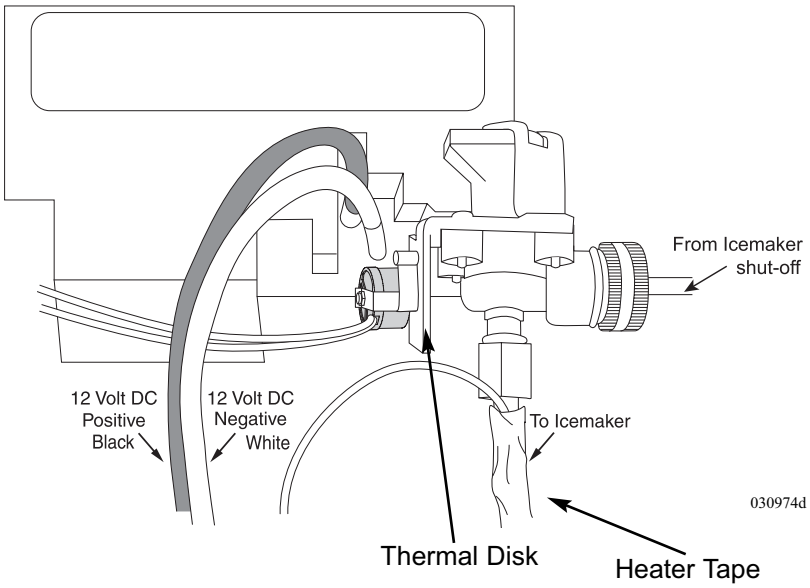

Refrigerator Alarm

The refrigerator audible alarm will sound for the following reasons:

1. DC or AC voltage is higher or lower than allowed.
2. Refrigerator is set to Auto and 120 Volts AC is discontinued.
3. The refrigerator fails to light on LP-Gas or fails to light after a period of operation.
4. Door is open longer than two minutes.
5. The circuit board detects a failure. The control panel will display a code.

NOTE:
If the alarm sounds, note the code in the LED display and turn the refrigerator off to silence the alarm.

INFORMATION:
Refer to the manufacturer's manual for the list of codes and their meanings.

Cooling Unit Fans

The cooling unit is equipped with a pair of cooling fans that pass air across the cooling unit. These fans start automatically and are audible when in operation.

Doors

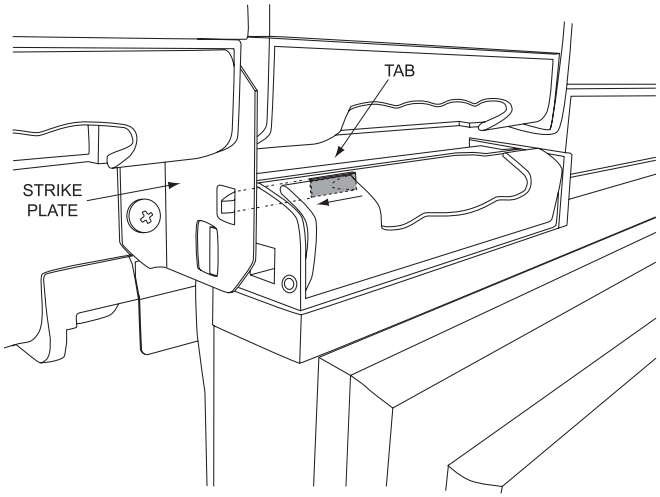

Storage Feature

030965c

The refrigerator doors use a positive latch that secures the door with a "click" to prevent the door from opening during travel. The doors use a heating element located in the flapper on the left door. The heating element activates when operating the refrigerator in any mode to help prevent moisture accumulation in high humidity conditions.

In storage, a completely sealed refrigerator is a perfect environment for mold and bacteria to grow. When storing the motorhome, reduce odor from mold and bacteria in the refrigerator by using the door storage feature to lock the doors partially open.

To use the storage feature, open doors enough to slide tab into the cut-out of the strike plate.

Storage Procedures

Storage Feature:

- Turn the refrigerator off and remove all items. Leave the drip tray under the cooling fins.
- Shorten defrost time by using trays of warm water. Do not use a heating gun, hair dryer or sharp objects to remove frost as these can damage the interior or cooling unit.
- Wash the interior using mild spray cleaners or a solution of liquid dish detergent and warm water. Do not use scouring pads or abrasive cleaners as these can damage the interior finish.
- Rinse with a solution of baking soda and water. Dry with a clean cloth.
- Lock the doors open.

CAUTION:
When defrosting, do not use a hot air blower. Permanent damage could result to plastic parts. Do not use a knife, ice pick or any other sharp instrument to remove ice from the freezer as they can puncture the system.

Interior Light

The interior light is located at the top of the fresh food compartment. When the door is open the light will illuminate.

Bulb Replacement:

1. Remove the light cover by pulling it toward the front of the refrigerator.
2. Remove the light bulb from the holder.
3. Install a GE#214-2 replacement bulb and install the cover.

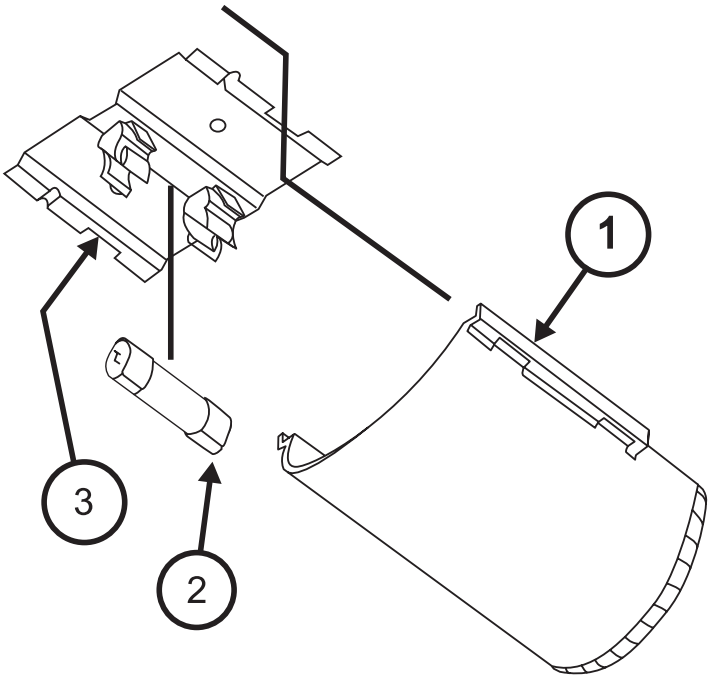

031116

Service

The LP-Gas function of the refrigerator and LP-Gas pressure will require annual service. Over time, the BTU rating of the flame can change, affecting the refrigerator's performance. Ambient temperature, high humidity and altitude above 5,500 feet can affect performance and function. If possible, switch mode operation to AC while at a higher altitude.

Air in LP-Gas Supply Lines

For safety reasons, the refrigerator will attempt to ignite on propane gas within a specified amount of time. When starting the refrigerator for the first time after storage, or after servicing the gas supply system, propane gas supply lines may contain air. Due to the air in the gas supply lines, the refrigerator may not ignite on propane gas within the specified amount of time. Follow the procedure on how to remove air from the LP-Gas supply lines.

To remove the air from the LP-Gas supply lines:

- Make sure the primary LP-Gas valve and any other necessary valves are open.
- Try lighting the cooktop burners first to quickly purge air from the main distribution line.
- Push the ON/OFF button to turn the refrigerator on.
- Press the MODE button until the refrigerator indicates LP. The refrigerator will start a 30 second trial for ignition during which the gas safety valve opens and the igniter sparks.
- If the refrigerator fails to light, indicated by F or NO FL (No Flame), turn the refrigerator off then back on and set to LP mode. If after the third attempt the refrigerator fails to light, stop and consult your local dealer or an authorized Norcold Service Center.

REFRIGERATOR - RESIDENTIAL (Optional)

The refrigerator operates from shore power, the generator or the inverter. Thermostat controls for the refrigerator and freezer temperature are located inside the refrigerator. There are seven temperature settings for the refrigerator and freezer. The recommended setting is 4. The freezer door has a water dispenser and ice cube dispenser. Ice can be dispensed as crushed or cubed. An infrared sensor prevents dispenser operation with the freezer door open.

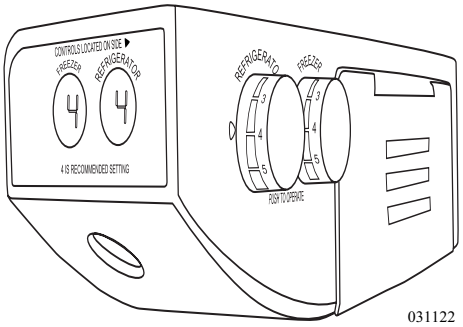

Controls

NOTE:
The refrigerator operates using a compressor, not from LP-Gas.

Tips:

- If possible, cool items first before putting them into the refrigerator.
- Keep the doors shut. Think about what you want before opening the doors.
- Allow the refrigerator 24 hours of operation before actual use to help it get a "head start" with the refrigeration process.
- A box of open baking soda will help absorb food odors. Wipe up any spilled soda.
- When dry camping use the inverter to supply AC power to the refrigerator. The refrigerator draws 6.5 Amps AC or 72 Amps DC from the batteries. It is recommended to use the Automatic Generator Start system. Due to the actual state of charge of the batteries, the amount of time the refrigerator will run from the inverter will vary depending on the state of charge of the house batteries.

While Traveling:

The refrigerator may be operated while the motorhome is traveling in order to keep the refrigerator contents cold. The electrical combination of the engine alternator and the inverter will supply the power necessary to operate the refrigerator on 120 Volts AC.

Refrigerator Operation from Inverter While Traveling:

To enable this feature:

1. Turn the inverter ON.
2. Turn the refrigerator ON.

NOTE:
It is advisable to acquire a refrigerator thermometer. Keep the interior box temperature at or below 40º F to reduce the possibility of food spoilage.

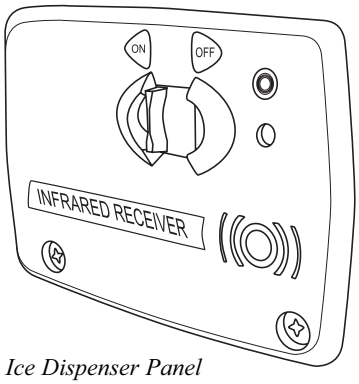

Ice Dispenser Panel

031122b

Icemaker:

The icemaker operates on 120 Volts AC and will function only after the freezer reaches freezing temperature. When the freezer door is open, the infrared signal is interrupted and shuts off the ice dispenser.

To Operate the Icemaker:

- Hook to city water or turn on the water pump. The valve for the water supply line to the icemaker must be open. The valve is located in the power cord reel bay.
- Slide the icemaker switch in the freezer compartment to ON. The icemaker sensors will automatically stop ice production.
- Manually turn the icemaker off by sliding the icemaker switch to OFF to prevent water from spilling out of the ice tray while the motorhome is in transit.

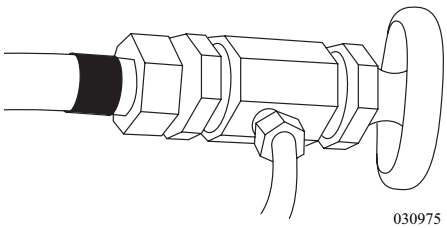

030975

Residential Icemaker Water Shut-Off Valve

NOTE:
Do not use the first one or two trays of ice if the refrigerator has been in storage. Ice cubes may have contaminates. Do not operate the icemaker without water pressure supplied to the refrigerator. Damage to the icemaker assembly may occur.

Water Filters:

The motorhome uses a 2 stage water filtration system, as well as a built-in water filter for the icemaker. The LED, located on the outside keypad of the refrigerator, indicates when the internal filter should be changed.

- **Green** = GOOD
- **Yellow** = ORDER
- **Red** = REPLACE

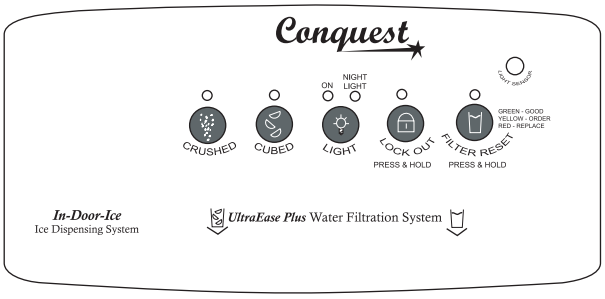

Ice Panel - Conquest 031118

After filter replacement, reset filter indicator lamp by pressing and holding the filter reset button until light turns off. Release button and indicator lamp will stay green.

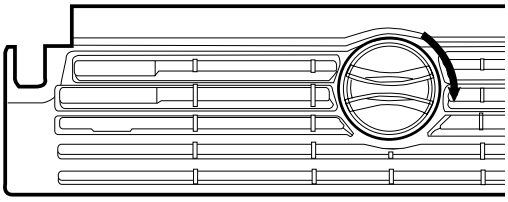

031115

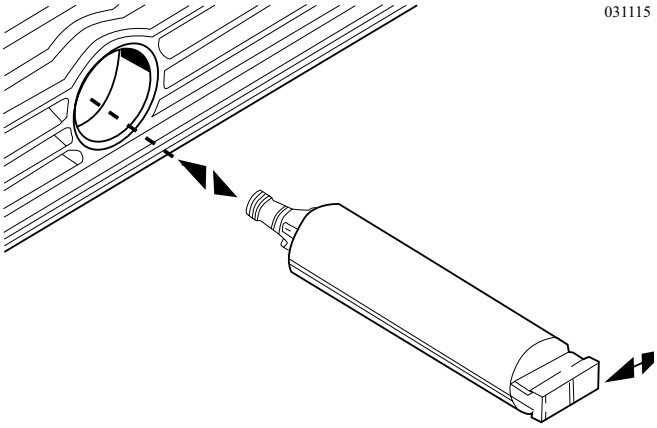

To Replace the Filter:

- Turn off water supply to the motorhome.
- Rotate knob (located below freezer door) counterclockwise 90º.
- Remove knob/filter assembly by pulling assembly out and away.
- Remove knob from filter. Do not discard knob.
- Attach knob to end of new filter.
- Insert knob/filter assembly into base. Align knob vertical.
- Push firmly to seat O-rings on filter and rotate knob 90º clockwise.

<u>INFORMATION:</u>
Replacement water filters may be obtained from Whirlpool at 800-442-9991.

Changing the Light Bulbs:

The refrigerator control panel, crisper and freezer light bulbs are 40 watt appliances bulbs. The ice dispenser bulb is 10 watts. Always replace the bulb with the same size, wattage and shape.

Storage:

- Turn the refrigerator off and remove all items. Wipe the interior using only cotton cloth and a mild detergent. Do not use scouring pads, window cleaners or an abrasive cleanser as these can damage the interior finish.
- The refrigerator doors are a magnetic lock and seal type doors. When storing the motorhome, position the doors partially open to help reduce odor from mold and bacteria. A completely closed up refrigerator in storage is a perfect habitat for molds and bacteria to grow.

<u>NOTE:</u>
Consult the refrigerator owner's manual for more details.

WATER DISPENSER - HOT

A compact tank, mounted under the sink, uses 120 Volt AC and draws 6.5 Amps to electrically heat water to the temperature of 190° F (88° C). A thermostat is installed to maintain the water temperature. The hot water dispenser system is vented to prevent tank pressurization.

WARNING:
To minimize the possibility of fire DO NOT store flammable items such as rags, paper or aerosol cans near the mounted tank. DO NOT store or use gasoline or other flammable vapors and liquids in the vicinity of this unit.

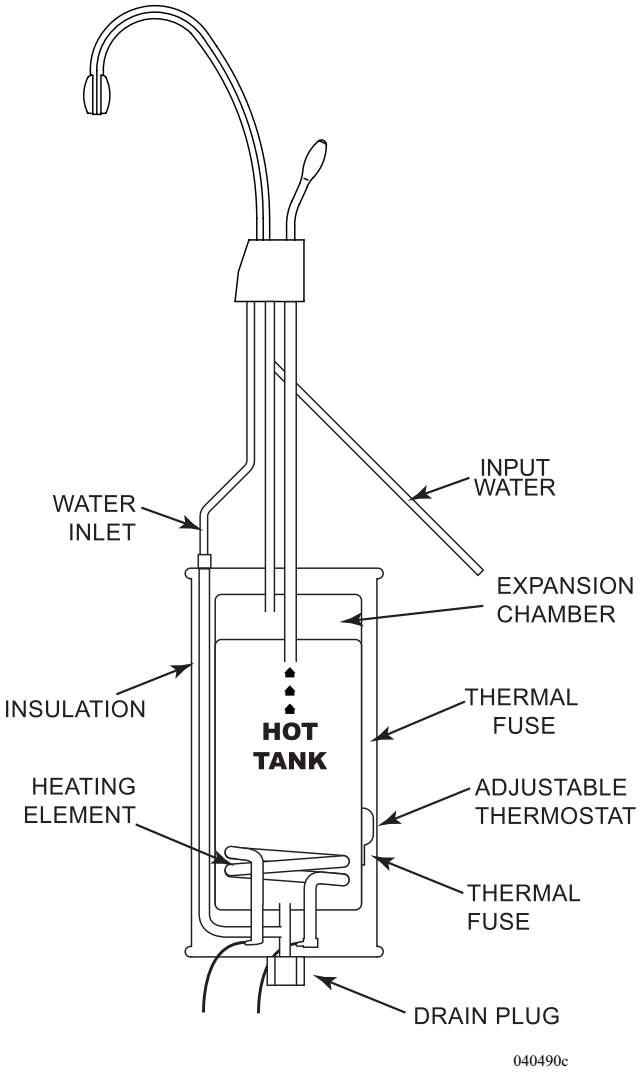

WARNING:
DO NOT remove or alter the thermal safety fuse. If the thermal fuse is open, contact an authorized service center. To prevent electrical shock turn the power switch OFF and disconnect the power cord before removing the access cover to adjust or service the thermostat.

Operation:

Turn the Insta Hot switch to the ON position. It takes approximately 10 to 15 minutes for the water to reach 190° F (88° C). **Use caution: steam or hot water may spurt from the faucet without turning it on.** After 10 to 15 minutes, turn the faucet on for about 20 seconds to release steam that may have built up in the hot water tank. Allow the water in the tank to reheat. Repeat this step one or two times. When a steady stream is dispensed, the hot water is ready for use. To shut off the system, turn the switch to the **OFF** position.

Temperature Adjustment:

If the steam continues or the water boils, adjust the temperature as follows:

- Turn the galley switch labeled Insta-Hot OFF and unplug the power cord.
- Remove the screw and access cover.
- Insert a screwdriver in the slot of the thermostat adjusting screw. Turn the screw clockwise ½ notch to increase the water temperature; counterclockwise ½ notch to decrease the water temperature.
- Reinstall the access cover, reconnect the electric power and turn on the galley switch.
- Draw three or four cups of water and allow unit to reheat.
- Repeat the procedure until desired temperature is reached.

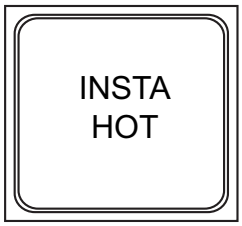

060260c

Switch located on Galley Overhead

<u>CAUTION:</u>
Do not allow the water to boil.

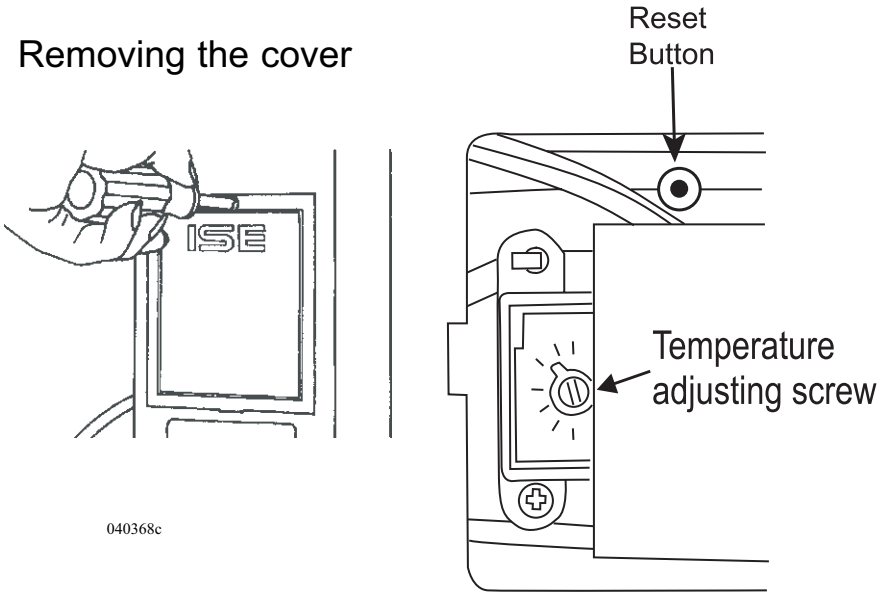

Thermal Cut-Out:

Should the Insta-Hot stop or fail to heat water, it may be a result of the thermal cut-out tripping. Open the access panel to reset the thermal cut out button.

Cleaning Hot Water Dispenser:

Use only mild cleaners to clean the dispenser spout and plastic components. Use of cleaning agents containing acids, alkalies and organic solvents will result in the deterioration of plastic components.

Draining the Insta-Hot Tank:
Drain the Insta-Hot tank before storage, or if interior temperature drops below freezing.

To Drain:
- Place a large pan or dish under the tank in the galley under the sink to catch leaks. Note that the Insta-Hot tank holds approximately ¾ gallon.
- Remove the drain plug.

WARNING:
Use care when operating this unit. DO NOT allow children to operate this unit. The tank is a non-pressure tank. DO NOT modify this system. DO NOT close the vent tube or connect other types of faucets or valves to the tank. Use only the faucet supplied. DO NOT allow the water to boil. The water and steam dispensed can instantly cause scalds or burns.

MICROWAVE/CONVECTION OVEN

The microwave/convection oven operates from 120 Volt AC supplied by shore power, the generator or the inverter.

Operation Tips:
- Check the type of cookware being used to see if it is microwave or oven safe depending on the type of cooking being done. Gold paint or glaze may contain a trace amount of gold which is electrically conductive and not compatible for microwave. Hand painted china commonly contains traces of metal.
- The glass tray and roller guide must always be in place during cooking.
- Ensure the door is firmly closed before use.
- If the control pad is not lit, plug another electrical appliance into the same outlet to verify 120 Volt AC power is present. If the test item works, contact an appliance repair facility to have the microwave/ convection oven checked.
- Steam accumulating inside or around the outside of the oven door may occur when the microwave/convection oven is operated under high humidity conditions and in no way indicates a malfunction of the unit. Wipe away steam using a soft cloth.

Microwave/Convection Oven Facts:
One of the most useful documents for the microwave/convection oven is the operations manual, located in the owner's information file box. Read it carefully and keep it for reference.

A properly functioning microwave/convection oven presents no hazard with ordinary use. Safety features should be kept in good condition. Never attempt to bypass safety interlocks or allow debris or residue to accumulate on the door or oven face. If the oven is damaged, discontinue use.

Oven adjustments or repairs should be made by qualified service personnel. Check the microwave/convection oven owner's manual for maintenance tips and other information. Remember to register the microwave/convection oven with the manufacturer.

NOTE:
If the ventilation fan has started automatically from a heated cooktop it can not be manually turned off.

NOTE:
When dry camping, minimize using the inverter to operate the microwave/convection oven due to the high rate of battery consumption.

NOTE:
The microwave/convection oven is for food preparation only. Do not use the microwave/convection oven to dry clothes, newspapers, shoes or other items.

Setting the Clock

To Set the Clock:
- Press the **STOP/CLEAR** pad.
- Press the **CLOCK** pad.
- Enter correct time in sequence using the number pads.
- Press the **CLOCK** pad to begin time.

NOTE:
The clock is a 12 hour clock only.

Cleaning the Microwave/Convection Oven

The exterior of the microwave/convection oven is plastic and metal. The interior is metal. Do not clean with scouring pads, harsh or abrasive cleaners, chemical cleaners or petroleum based thinners that can damage the finish. Use mild soap and water with a damp cloth or paper towel to remove stains or spills. When cleaning the touch pad, open the door to prevent accidental operation. Use mild soap and water with a soft cloth. Avoid using excess amounts of water on the touch pad. The turntable plate and oven racks are dishwasher safe.

Charcoal Filter:

Depending on use the charcoal filter should be replaced every 6 to 12 months. Use the following procedure to remove the louvers to replace the charcoal filter and oven light.

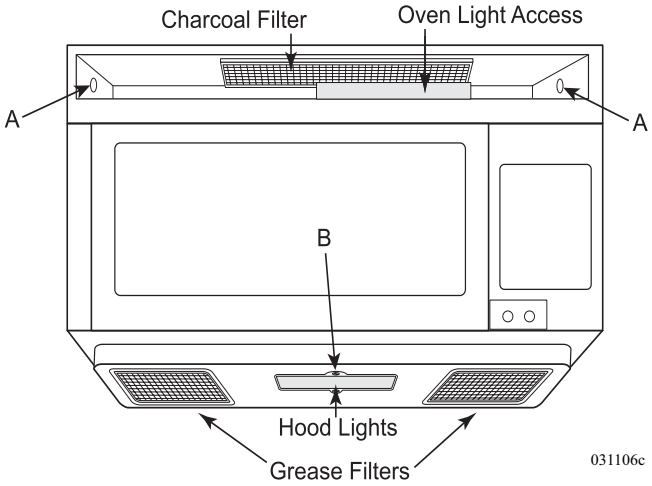

1. Remove power to the microwave/convection oven.
2. Remove the screws (**A**) securing the louver.
3. Insert a flat edge screwdriver over each tab pressing downward and move the louver away from the microwave.
4. Remove and replace the charcoal filter. Ensure the filter is positioned on the supporting tabs.
5. Replace louver and mounting screws.

Oven Light:

1. Remove the louver as indicated above.
2. Slide the metal light cover forward and lift upwards.
3. Remove the light bulb and replace only with an equivalent watt bulb. **DO NOT EXCEED 30 WATTS**.
4. Replace light cover, louver and mounting screws.

Hood Light:

1. Remove power to the microwave/convection oven.
2. Remove the screw (**B**) securing the light cover.
3. Remove the light bulb and replace only with an equivalent watt bulb. **DO NOT EXCEED 30 WATTS.**
4. Close the cover and re-secure with screw.

CAUTION:

Light cover may be hot. Do not touch glass with lamp ON. Never use the light for prolonged periods, such as a night light.

Grease Filters:

Operating the microwave/convection oven without the grease filters in place can damage the unit. Grease filters should be cleaned at least one a month. To remove the filters, use the pull-tab to slide the filter to the end of the opening and tip down. Soak the filters in the sink or in a dishpan filled with hot water and detergent.

- Do not use ammonia or other alkali-based products that may darken the filter material.
- Agitate the filter. Use a scrub brush to remove caked on grease.
- Rinse the filter thoroughly and shake dry. Place the filter back into the opening, tip upward and slide filter to the end of the opening. Lock in place. Be careful not to kink or warp the filter upon installation.

Cleaning Tips:

- Turn the oven off before cleaning.
- Cover food while cooking to keep food spattering to a minimum.
- Clean up all spills or spatters before they dry. Wipe up food spatters or spilled liquids with a damp cloth. Mild detergent may be used for stubborn spills. Do not use harsh detergent or abrasive cleaner.
- It is occasionally necessary to remove the glass tray for cleaning. Wash the tray in warm, sudsy water or in a dishwasher.
- The roller guide and oven cavity floor should be cleaned regularly to avoid excessive noise. Wipe the bottom surface of the oven with mild detergent water or window cleaner and then dry. The roller guide may be washed in mild sudsy water.
- Food odors may linger inside oven. To help eliminate odors, combine the juice and the peel from one lemon, several whole cloves and 8 oz. of water into a two cup bowl. Place in oven on high power; bring to a boil for several minutes. Let cool in the oven for several minutes.
- Clean the outside oven surface with soap and water. Wipe away any residue using a damp cloth. Dry with a soft cloth. To prevent damage to the operating parts inside the oven, do not allow water to seep into the ventilation openings.
- If the control panel becomes wet, clean with a soft, dry cloth. Do not use harsh detergents or abrasive when cleaning the control panel.

AUTOMATIC APPLIANCE SELECTOR

The Automatic Appliance Selector limits the possibility of shore power overload by allowing only the priority appliance to operate. The system uses automatic switching relays to control AC power to the appliances hooked to Automatic Appliance Selector.

The appliances are listed in the order in which they are controlled by the Automatic Appliance Selector.

Standard:
1. Washer-Dryer
2. Bedroom Roof Air Conditioner

All Electric:
1. 120 Volt AC Cooktop
2. Washer-Dryer
3. Bedroom Roof Air Conditioner

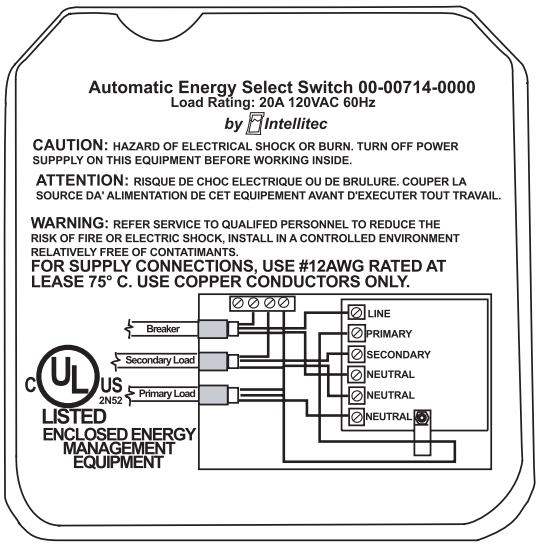

Located on the floor in curbside rear closet.

031108

The priority appliance is the cooktop. When the cooktop is operating, the washer-dryer and bedroom roof air conditioner will not operate until the cooktop is turned off. The bedroom roof air conditioner will not operate unless the washer-dryer and cooktop are off. Likewise, the washer-dryer will be automatically turned off if the cooktop is turned on. The bedroom roof air conditioner will be turned off if the washer-dryer is turned on.

NOTE:
Only one of the following can be used at a time: Bedroom A/C, Washer-Dryer, or Cooktop. This is due to the automatic appliance selector limiting the use of appliances according to priority, to prevent electrical overload.

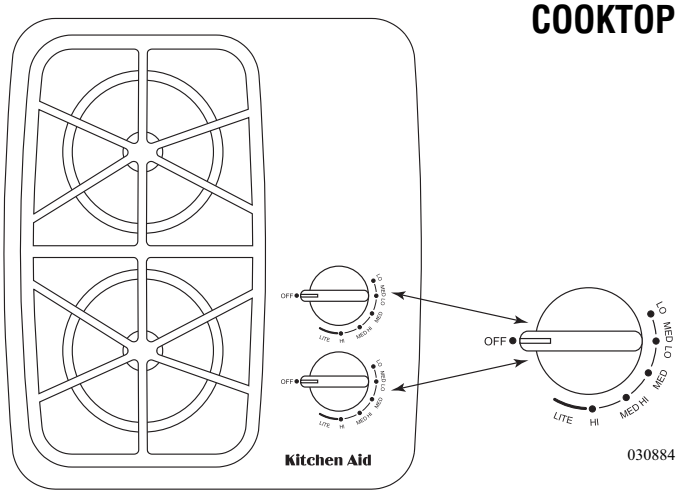

The cooktop uses an electric ignition system that requires 120 Volts AC to operate. The cooktop should be used for cooking purposes only, not as a heating source. When the burner valve is opened the fuel source flows through the valve into the mixture tube. The fuel passes by a hole or venturi in the mixture tube, which draws air in with the fuel for a proper fuel/air ratio. The flame should have a blue appearance with a lighter blue defined flame at the burner head. A yellow flame or yellow flame tips indicate a rich fuel mixture, which can leave a black color or carbon on the bottom of the cookware.

The cooktop operates under the following conditions:

- The battery cut-off switch is on and the batteries are charged.
- The primary LP-Gas valve on the LP tank is open.
- The LP-Gas valve in the cabinet under the cooktop (located next to the regulator) must be open.

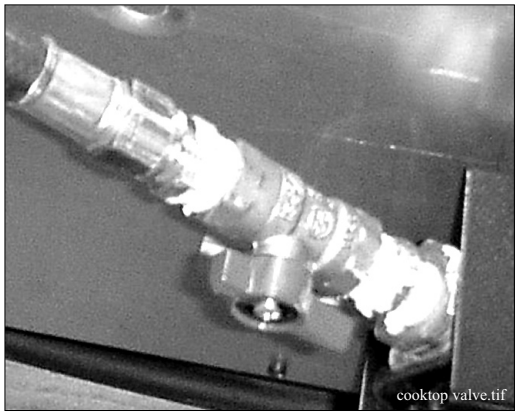

LP-Gas Valve: Located in cabinet under cooktop next to the regulator. Must be open.

Using the Cooktop:

1. Place the cookware on the burner grate over the desired surface burner.
2. Open the burner valve by applying a downward pressure on the knob and rotating counter-clockwise from the OFF position to LITE.
3. When the burner lights, rotate knob to the desired flame setting. In the event of a power outage or igniter failure, the cooktop can be manually lit.

Surface Burners:

Surface burners have an independent heat ratings of 6,000 and 12,000 BTUs. The lower BTU burner (located next to the control knobs) can be used for smaller cookware. The highter BTU burner should be used for larger cookware.

The flames at the surface burners should have an even appearance at the burner base. Uneven flames may indicate the need to clean the burners.

Control Knobs:

- Press down knob and rotate to **LITE** to activate electric spark to light the burner.
- **HI -** Used to start the cooking process and bring liquids to a boil quickly.
- **MED HI -** Used to hold a boil in liquids.
- **MED -** Used for gravy and large quantities of vegetables.
- **MED LO -** Used to keep food cooking at a reduced heat after starting from higher settings.
- **LO -** Used to keep food warm or simmer.

WARNING:
Do not leave burners unattended during cooking. Do not leave burner valve(s) open while burner(s) are not lit. LP-Gas is heavier than air and will settle on the floor and "hide" in corners. If you smell gas, extinguish all open flames. Open all windows and doors. Do not touch any electrical switches. They may cause a spark that can ignite. Evacuate the motorhome and shut off the primary LP-Gas valve. Liquid propane is highly volatile, highly explosive and extremely dangerous. Explosion, fire, property damage, injury or death can result. Contact a qualified service center to have the problem correctly diagnosed and repaired before resuming operation.

Cooktop Tips:

- A yellow flame is an indicator of incorrect fuel/air ratio. Lowered BTU output and carbon build up can occur.
- When cooking at an altitude above 5,000 feet, the flame may change appearance and the flame BTU output will be lowered. Allow extra cooking time.
- Do not allow the tips of the flame to extend beyond pan or pot edge. When this occurs, heat is wasted and possibility of injury increases.
- Cooking time can be reduced if the least amount of liquid is used. The choice of cookware selected can make a big difference.
- Additional information can be found in the "*Cooktop Use and Care Guide*" located in the Information File Box.

Care & Cleaning

Regularly wipe down the cooktop with a soft cloth and a warm detergent solution to keep it clean. Do not clean the cooktop with abrasive or harsh cleaners such as steel wool, bleach, ammonia or oven cleaner.

Use a dry paper towel or cloth to wipe up spatters or spills when the cooktop surface is still slightly warm. To avoid accidental burns, **do not** clean the cooktop when it is hot to touch. Do not allow food to bake on. Clean the surface burner grate and caps using the same guidelines as the cooktop surface.

Porcelain Enamel:

Sharp blows, radical surface temperature changes, etc., will cause enamel to chip or crack. Some foods, such as vinegar, lemon juice, tomatoes and milk, contain acids that can dull the finish of the enamel. To avoid dulling the finish, wipe up the spill before it is baked on. Steel wool and course, gritty cleanser will scratch or mar the surface. Use gentle kitchen cleanser powder or grease cleaner. For further information on care and maintenance of the porcelain, call "*Hopes Cultured Marble Polish*" at 800-325-4026.

COOKTOP - ALL ELECTRIC (Optional)

The electric cooktop operates from 120 Volts AC supplied from either shore power or the generator. The washer-dryer and bedroom A/C will not operate until the cooktop is turned off.

To Operate the Cooktop:

- Hook to shore power or start the generator.
- Push down and rotate knob to the desired heat setting.
- Red indicator lamp glows when a knob is on.

NOTE:
Only one of the following can be used at a time: bedroom A/C, washer-dryer, or cooktop. This is due to the automatic appliance selector limiting the use of appliances according to priorty, to prevent electrical overload.

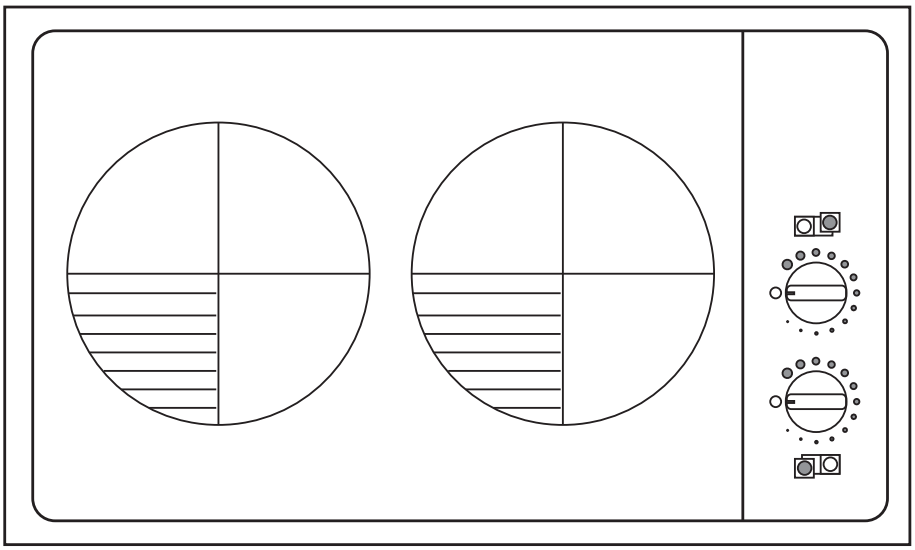

030890

WALL THERMOSTAT

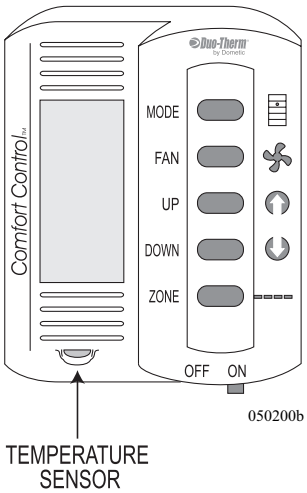

Comfort Controls to operate the **HVAC** (**H**eating, **V**entilation and **A**ir **C**onditioning systems) are located in the living room and in the bedroom.

The living room Comfort Control operates the front roof air conditioner functions, and the dinette and living room heat exchangers. The bedroom Comfort Control operates the rear roof air conditioner, mid-roof air conditioner, and hallway, bathroom and bedroom heat exchangers. Both Comfort Controls use a liquid crystal display to show the current mode status.

The HVAC system provides five different functions: **Off**, **Fan**, **Cool**, **Heat Pump** and **Furnace** that are selected by pressing the **Mode** button.

Fan controls blower speed of the roof air conditioner. Two speeds are available - low and high. Selecting fan speed **Auto** adjusts the fan speed automatically, based on temperature set point and actual temperature in a selected zone.

The motorhome is divided into three operating zones: front, middle and rear. The selected Zone will flash. Control individual zone temperatures using the **UP** or **DOWN** buttons.

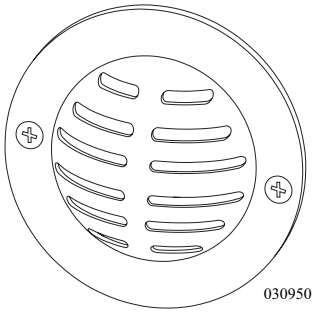

Remote Temperature Sensor: Located in the bathroom.

Living Room = Zone One
Middle = Zone Two
Bedroom = Zone Three

NOTE:
The bedroom is designated Zone One at the Bedroom Comfort Control.

NOTE:
The Comfort Control must be ON to operate any HVAC function. Do not select conflicting modes of operation. One zone cannot be on Cool while another zone is set to Furnace.

NOTE:
The motorhome will not heat or cool faster by selecting a very high or very low temperature setting.

NOTE:
Only one of the following can be used at a time: bedroom A/C, washer-dryer, or cooktop. This is due to the automatic appliance selector limiting the use of appliances according to priorty, to prevent electrical overloads.

The roof air conditioners operate from 120 Volts AC supplied by shore power or the generator.

NOTE:
The air conditioning system freezes moisture in the air. It is recommended to set the blower fan speed to high when operating in high humidity.

NOTE:
There are ambient air temperature limitations in Heat Pump mode. The roof air conditioner will not operate in Heat Pump mode with ambient temperatures of 30º F and below.

Operations

The roof air conditioner will operate only when the following needs are met:

- 120 Volts AC, from either shore power or the generator, is supplied.
- The interior house power is ON and the house batteries are charged.

Fan Operation:
Circulates interior air by using the roof air conditioner blower. The fan speed controls the roof air conditioner blower speed in the following modes: **Fan**, **Cool** or **Heat Pump**.

- Press the **MODE** button repeatedly until **Fan** is displayed.
- Press the **FAN** button to select the desired fan speed.

Air Conditioner Operation:
The living room comfort control operates the front roof air conditioner functions.

- Press the **MODE** button repeatedly until **Cool** is displayed.
- Set desired fan speed by pressing the **FAN** button.
- Set desired cooling temperature by pressing the **UP** or **DOWN** buttons.

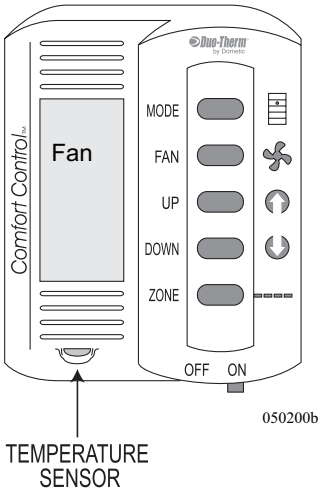

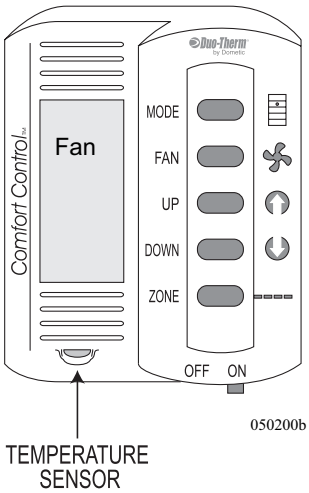

The Bedroom comfort control will operate rear roof air conditioner functions and (if equipped) the center roof air conditioner.

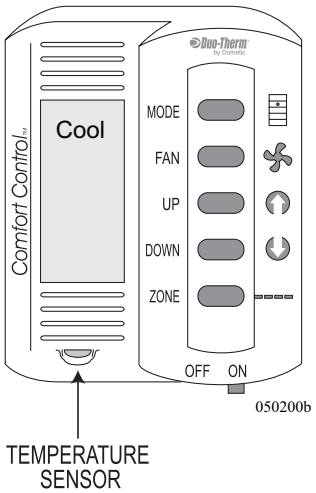

- Press the **MODE** button repeatedly until **Cool** is displayed.
- Press the **ZONE** button to alternate between Zone One and Zone Two. Zone One controls the bedroom roof air conditioner and Zone Two controls the center roof air conditioner.
- Set desired fan speed by pressing the **FAN** button.
- Press the **UP** or **DOWN** buttons to set desired cooling temperature.

NOTE:
The compressor will engage approximately two minutes after blower motor activation. This prevents accidental compressor activation against high pressure.

Heat Pump Operation:

The Heat Pump mode offers heat by using the air conditioner as a heat source. The air conditioning principle is reversed, supplying heated air to the ceiling registers instead of refrigerated air. There are ambient temperature limitations of the Heat Pump mode.

NOTE:
The roof air conditioner will not operate in Heat Pump mode with ambient temperatures at or below 30º F.

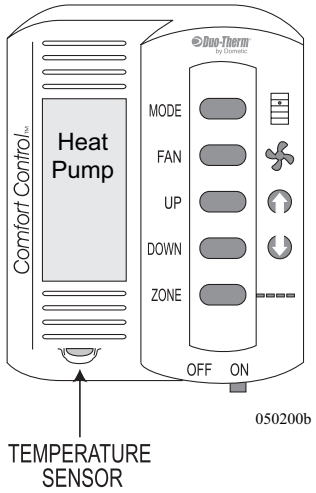

If the Heat Pump mode is selected at or below 30° F., or if operating in Heat Pump mode and temperature drops to 30º F., the air conditioner will stop Heat Pump operation and **Aux Heat** will be displayed. The Aqua-Hot will be selected as the auxiliary heat source and will begin operation. The furnace will remain the primary heat source until ambient temperature rises above 42º F. When ambient temperature is between 30 and 42º F., a defrost cycle is initiated approximately every 40 minutes of compressor operation. The blower motor will stop for five minutes and **Defrost** will be displayed. After the defrost cycle the heat pump operation will resume.

Heat Pump Operation:

- Turn **ON** the interior house power.
- Slide the **ON/OFF** switch to the **ON** position.
- Press the **MODE** button repeatedly until **Heat Pump** is displayed.
- Set desired fan speed by pressing the **FAN** button.
- Press the **UP** or **DOWN** buttons to set desired heating temperature.

Return Air Filters

Frequently clean the return air filters. The filters are located inside the A/C behind the intake vent covers. Access filters by lowering the decorative ceiling panel using a ratchet and a 7/16" socket with an extension. The panel is secured with hinges on the curb side and bolts on the road side. The living room panel is heavy. Remove the two end bolts first. Remove the center bolt while holding panel in place and gently lower panel. The filters are secured in place with screws. Operating the air conditioner without the return air filters in place may plug the evaporator core with dirt and substantially affect the performance of the air conditioner.

NOTE:
To prevent scratching the mirrored surface when accessing filters, place a protective barrier, such as a cotton towel, between the mirrored surface and work area of any tools.

To Clean:
- Wash filters in warm soapy water. Do not use solvents.
- Rinse filters thoroughly with fresh water. Allow them to dry.
- Install filters and secure the intake vent covers.

The Auto Temp Start (ATS) system will automatically engage the generator when interior temperatures rise to a temperature set point programmed into the ATS Control Module to provide 120 Volt AC power to the roof air conditioners. This feature is useful when high temperatures are expected and the motorhome is not hooked to shore power.

ATS Control Module Features:
- Adjustable temperature start between 65° and 85° F.
- Adjustable generator run time between one and five hours.
- Test button to confirm generator start up.

The temperature setting on the ATS Control Module senses interior temperature, and when a preset temperature is reached, the generator engages to operate the roof A/C in order to maintain preferred interior temperature. Time setting on the ATS Control Module determines how long the generator will run before the ATS system disengages the generator.

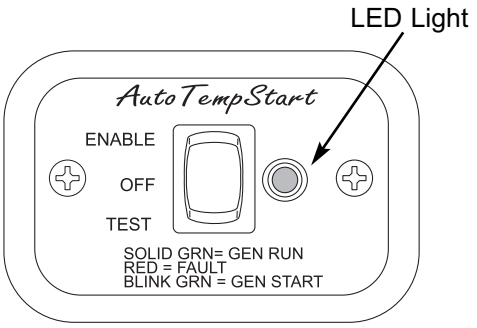

ATS Remote located on the Wall Panel.

To Enable the System:

- Set the desired interior temperature on the ATS Control Module. Run time is preset at two hours. Push the ATS remote switch to Enable.
- Turn on interior house power using the battery cut-off switch at the entry door.
- Set Comfort Control mode(s) to Cool. Set the temperature on one Comfort Control identical to the ATS Control Module temperature, and additional A/C Comfort Control settings a few degrees higher. This will permit one air conditioner to maintain desired temperatures, until it becomes necessary for additional A/C units to engage.

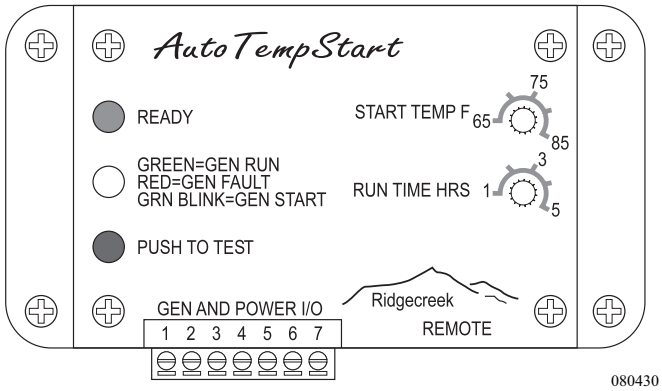

The control module is located adjacent to inverter.

When interior temperature rises to the preset temperature on the ATS Control Module, the generator will engage to supply 120 Volt AC power to the roof air conditioners. Once the present Run Time is reached, the generator will disengage. In the event that weather conditions have prevented interior temperatures from reaching the desired level, the ATS system will engage the generator for a subsequent timed cycle. This on/off procedure will continue until the interior temperature drops below the ATS Control Module set point, or the system is turned off.

NOTE:
The ATS system does not affect manually starting or stopping the generator or the RC7 GS automatic generator start program.

To Test the System:

The ATS system should be tested after changing settings, or when the motorhome is removed from storage. To test the system, press and hold the switch to the **Test** position on the remote for two seconds, or press and hold the **Test** button on the Control Module for two seconds. The status lamp will flash **green**, and the generator will engage for approximately one minute, to signify that the system is in working order.

Error:

The LED located on the Remote and on the Control Module will illuminate **red** to indicate a system error. Reset by turning the system to off. Confirm that the **green** power indicator lamp on the Control Module is illuminated. If so, turn the system to **Enable**. If the error remains, turn the system off. Disconnect the 7-pin connector at the ATS Control Module. Turn the system to **Enable**. Reinstall the 7-pin connector at the ATS Control Module.

If the error indicator still illuminates, test the Control Module. Unplug the remote cable (phone line) at the Control Module. Push and hold the **Test** button. If the generator engages, the problem may lie in the ATS remote. Discontinue ATS system use, and have the system serviced.

AQUA-HOT

The Aqua-Hot appliance is a water heater and furnace in one. A 50,000 BTU diesel fired burner and a 1650 Watt AC element work to heat a 50/50 solution of Propylene Glycol antifreeze and water to approximately 200º F. The heated antifreeze solution circulates through heat exchangers located within the motorhome to provide interior heat. Potable water is heated by the Aqua-Hot for domestic use. The Aqua-Hot can also preheat the engine, making it easier to start on cold mornings.

NOTE:
The Aqua-Hot antifreeze is propylene glycol based boiler antifreeze. Do not mix antifreeze types.

NOTE:
The Aqua-Hot must be turned ON before using any heat feature.

Diesel Burner:

The Aqua-Hot will consume approximately ½ gallon of diesel fuel for each hour of continuous burner operation (about one or two gallons a day). The diesel burner is rated at 12 Volt DC/65 watts. Circulating pumps are rated at 12 Volt DC/12 Watts each. The Aqua-Hot has a fast recovery rate when operating on diesel. To heat the Aqua-Hot with the diesel burner, turn the Diesel switch to the On position. The switch will illuminate when the Aqua-Hot is on. The burner will have to operate for 20 to 30 minutes before maximum heat is available for interior heating or hot water.

WARNING:
Do not operate the diesel burner if the motorhome is located inside the building. Carbon Monoxide gas can accumulate and cause fatal injury.

Electric Heat Element:

The electric element works well when plugged into 50 Amp service. When plugging into less than 50 Amp service, exercise care not to overload the electric service provided. The rate of recovery of the electric element is slower than the diesel burner. Allow two to three hours for the Aqua-Hot to reach operating temperature when operating from the electric element.

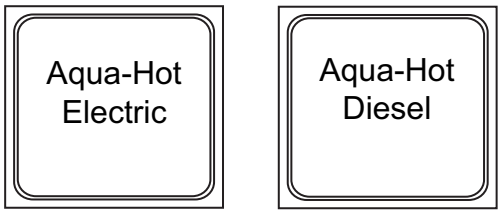

060260c

Switches located on Galley Overhead Cabinet.

Interior Heat Exchangers:

The heat exchangers are small radiators with 12 Volt DC blower motors. Current consumption is approximately ½ Amp per large heat exchanger. The small heat exchanger used in the private bath and the holding tank bay is ¼ Amp.

Engine Preheat:

The Aqua-Hot system has an engine preheat feature to aid engine starting in cold weather. Inside the Aqua-Hot is an engine coolant loop and pump that will circulate heated coolant through the engine.

To Use Engine Preheat:

- Turn On the Aqua-Hot diesel switch and allow the system to warm up.
- Turn the Aqua-Hot Engine preheat switch On to activate the engine pump inside the Aqua-Hot. The time required to preheat the engine varies with ambient temperature. Allow two or three hours of engine pre-heat time.

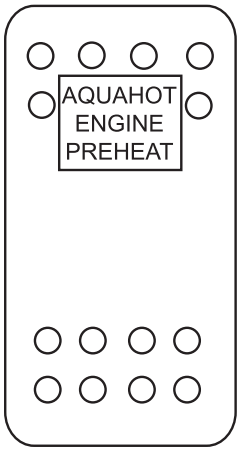

080342b

Located on Driver Console

Engine Heat Exchange System:

When traveling, the water pump on the engine circulates heated engine coolant through the Aqua-Hot. Through convection, heat transfers to the Aqua-Hot coolant, providing hot water and interior heating. Use the Comfort Control to operate the heat exchangers.

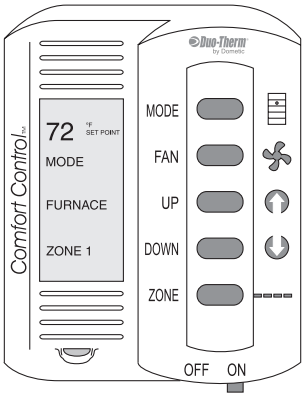

050200h

To Heat the Interior While Traveling:

- Turn on the interior house power.
- Set the Comfort Controls to Furnace.
- Select the desired Zone and Temperature.

Troubleshooting:

An electronic display panel (Electronic Controller) is located next to the Aqua-Hot in the curbside bay. The display panel has LED fault indicators that are used to diagnose a problem with the Aqua-Hot. If a heating source is selected (diesel or electric) and the Aqua-Hot does not appear to be working, check to see if any LED fault indicators are lit on the electronic display panel. A fault lamp may be overlooked due to viewing angle.

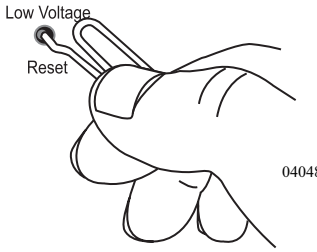

040486c

Use an end of a paper clip to manually reset the Electronic Controller. Press the plastic button inside "Low Voltage Reset."

Fault Indicators:

- **Low Tank Level Cutoff -** Heating function has shutdown due to low level of coolant in Aqua-Hot. Check coolant level.
- **Electric Heating Element Status -** Green indicator means the Aqua-Hot is being heated by 120 Volts AC.
- **Low Voltage Reset -** The Low Battery Voltage Fault LED will illuminate. Reset Controller by cycling Diesel burner switch or inserting a paperclip into the hole. Press the Low Voltage Reset button.
- **Heating Status -** Aqua-Hot is being heated by Diesel or the 120 Volt AC electric element.
- **Heating Zones Status -** A thermostat is calling for heat in a zone. Normal LED is green. Red LED means a short has occurred in that zone.
- **Pump Status -** When a pump is operating, LED is green. A red LED indicates a short in the pump.
- **Low Battery Voltage Fault -** Red LED indicates battery voltage is low. Hook to shore power or start the generator. The Aqua-Hot will not function until the Electric Controller is reset by cycling the Diesel burner switch off, then back to on or by inserting a paperclip or similar tool into the Low Voltage Reset hole. Press the Reset button.

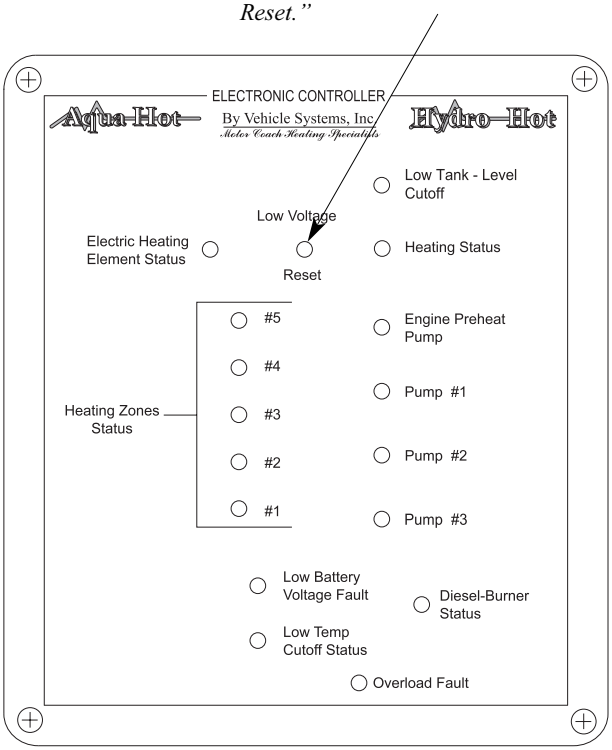

Located in Curbside Bay.

040486b

Bay Thermostat:

A small heat exchanger is located in the basement to help prevent freezing in the water system during cold weather. This thermostat turns the heat exchanger motor and Zone 2 pump on or off. The bay thermostat is located in the curbside water service bay. Adjust the thermostat between 40 and 50° F.

NOTE:
Turn on the diesel burner or electric element when heating the bay.

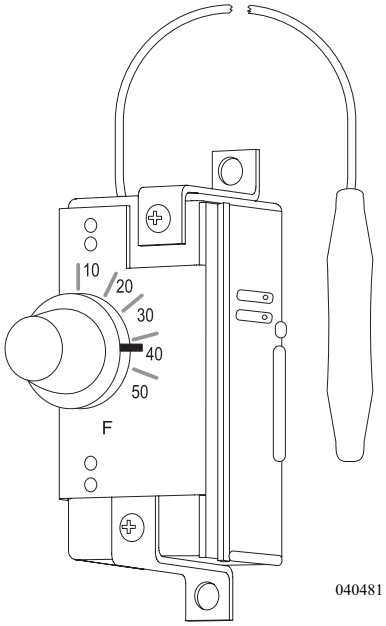

Bay Thermostat: Located in Aqua-Hot Bay.

Antifreeze:

The antifreeze is a special "boiler type" propylene glycol base. The antifreeze has low silicate content with corrosion inhibitors and heat transfer compounds. This type of antifreeze provides freeze protection and excellent heat transfer for operating efficiency. The antifreeze is mixed to a 50/50 ratio with de-ionized water (water purified by reverse osmosis). Do not mix antifreeze types as this can cause scaling and possible component failure. The antifreeze can be purchased directly from Vehicle Systems Inc.

CAUTION:
Use only a non-toxic propylene glycol based antifreeze recommended for "boiler" applications. This antifreeze is affirmed GRAS (Generally Recognized as Safe by the EPA). Contact Vehicle Systems Inc. at 1-800-685-4298 to purchase the antifreeze.

Reservoir:

The coolant reservoir is located behind the curbside fuel door. Check the reservoir coolant level monthly. Inspect the coolant level when the diesel burner has just shut off. The coolant level should be at the Full Hot level. Adding coolant to the reservoir when the Aqua-Hot is not at operating temperature may result in overflow when the Aqua-Hot attains normal operating temperature.

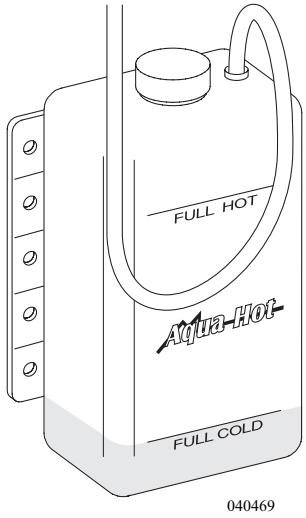

Coolant Overflow Tank: Located in the Fuel Bay.

Disinfecting:

The tubing inside the Aqua-Hot is rated for fresh water and winterizing solutions. Periodically the potable water system will be disinfected. Disinfecting the potable water system will include flushing the disinfecting solution through the Aqua-Hot. This will not affect the Aqua-Hot as long as the solution is thoroughly rinsed. However, failure to thoroughly rinse the Aqua-Hot with fresh water may result in damage to the Aqua-Hot.

CAUTION:
If not properly and thoroughly rinsed, bleach or other concentrated chlorine bearing chemicals can cause failure to the tubing inside the Aqua-Hot domestic water loop.

Winterize:

The Aqua-Hot can remain on during the winter months or it must be winterized with FDA approved RV antifreeze to prevent freeze damage. The RV antifreeze must be pumped through the Aqua-Hot until the solution appears at the hot water side of a faucet. The onboard water pump can be used (see diagram) or use a separate pump hooked to the city water fitting. Refer to the Aqua-Hot owner's manual for complete winterizing instructions.

If the Aqua-Hot is not winterized, it must remain operational to prevent freeze damage. Use caution such as not operating the diesel burner inside a building or if a power outage occurs and operating from electric.

CAUTION:
Failure to winterize the Aqua-Hot with Non-Toxic FDA approved RV antifreeze during freezing temperature will result in serious damage to the Aqua-Hot. Refer to the Aqua-Hot owner's manual for detailed winterizing instructions.

CAUTION:
If the motorhome is hooked to shore power during the winter months and the Aqua-Hot is operating on the electric element, a temporary power outage can allow the Aqua-Hot to freeze resulting in damage.

WARNING:
Do not operate the diesel burner when the motorhome is located inside a building. Dangerous Carbon Monoxide gas can accumulate which can be fatal.

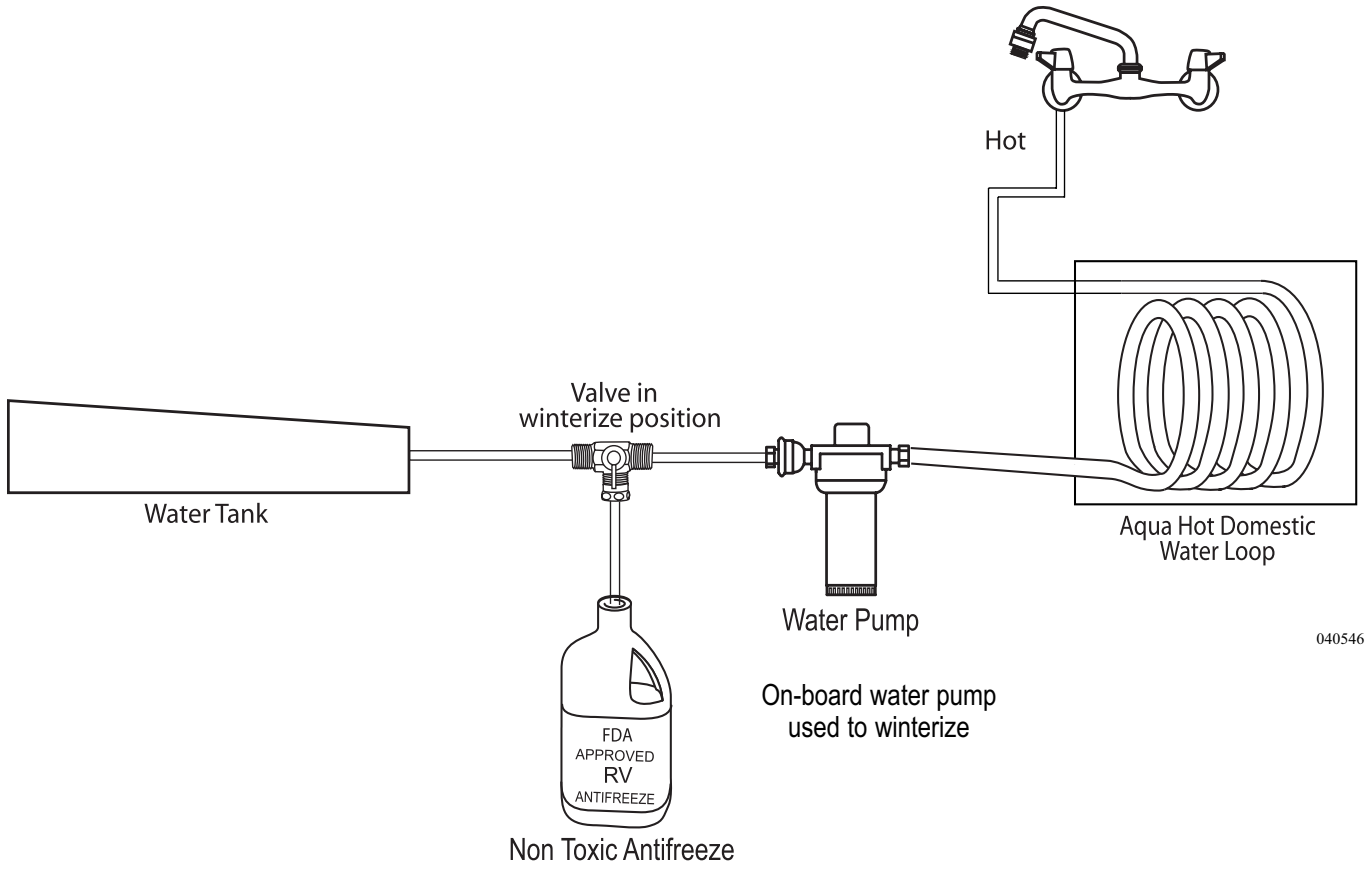

Annually:

Have the Aqua-Hot tuned up yearly. A tune up consists of a fuel nozzle and fuel filter replacement, as well as a thorough cleaning of the combustion chamber. This simple tune up will keep the Aqua-Hot running smoothly throughout the year, as well as allow service personnel to inspect for additional wear of other components. Signs that the Aqua-Hot may need servicing are continuous white exhaust smoke or poor ignition start up. When in operation, the Aqua-Hot should have a smooth, high-pitched whine. Loud growls or other abnormal noise indicates service or repair is required.

CAUTION:
Disconnect all power supplies before cleaning or servicing.

Fuel Filter/Water Separator

Aqua-Hot Fuel Filter:

The filter is located on the curbside of motorhome behind the fuel access door.

Draining the Collection Bowl:

Water is heavier than fuel. Water will settle to the bottom of a fuel bowl, making it appear different in color. In high humidity environment, check the collection bowl more often. If contaminants are present, turn off the Aqua-Hot then open the drain. Properly dispose of waste contaminant.

Element Replacement:

Contamination levels in the fuel determine the frequency of element replacement. Fuel flow to the Aqua-Hot becomes restricted as the element gradually plugs up with contaminates, resulting in noticeable heating loss and/or hard starting. If this occurs, change the element as soon as possible.

As a guideline, change the element every 500 hours, annually or at first indication of heat loss, whichever occurs first. Always carry an extra replacement element as one tank of contaminated fuel can plug a fuel filter. Replacement filters must have a 10-micron rating.

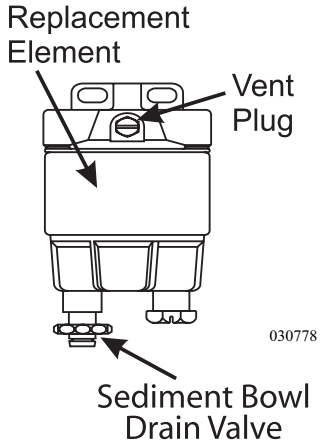

Fuel FIlter: Located in Curbside Fuel Bay.

Racor filter - Aqua-Hot R2TRA000T ten micron.

To Replace the Element:

- Open the drain valve to drain the filter unit.
- Spin bowl/element from head and remove element.
- Coat new seals with motor oil and install the new element.
- Spin bowl/element onto head and tighten firmly by hand.
- Start Aqua-Hot and check fuel filter for leaks.

NOTE:
It may be necessary to cycle the diesel burner switch on and off a few times to thoroughly purge the fuel system of air.

General Layout:

An understanding of the general layout of the Aqua-Hot system will help in operating and troubleshooting the system.

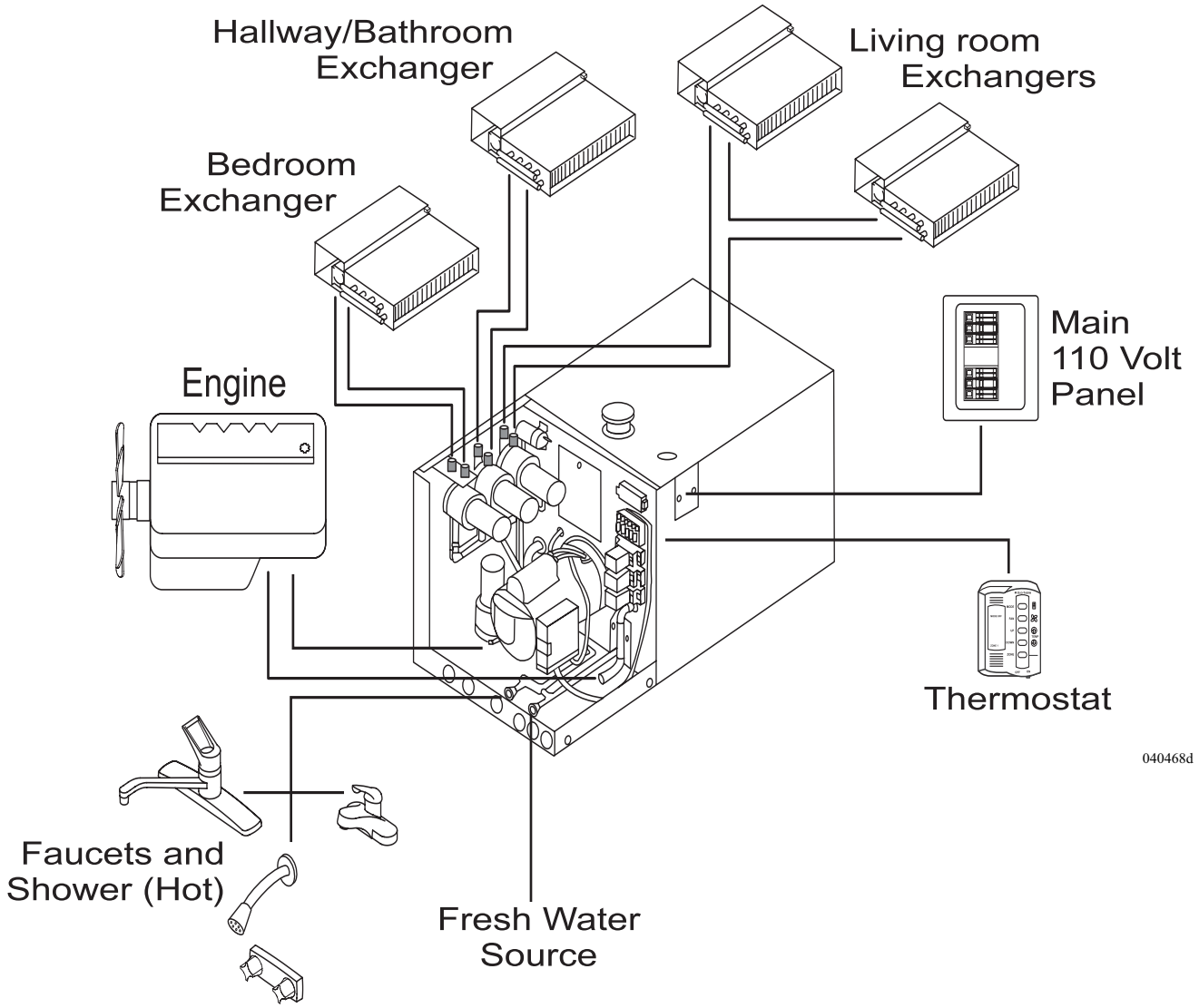

Aqua-Hot Typical Layout

ELECTRIC BASEBOARD HEATER (Optional)

The baseboard heater operates from 120 Volts AC supplied by shore power or the generator. An adjustable thermostat and remote switch controls the operation of the heater.

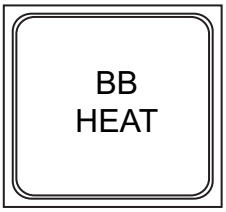

060260c

Switches located on Galley Overhead Cabinet.

To Operate the Heater:

- Hook to shore power or start the generator.
- Adjust thermostat to desired setting.
- Turn on the Heater switch.

NOTE:
The heater is rated at 1000 watts or 8.8 Amps. Use care when hooked to anything less than 50 Amp service.

TIP:
If heater operation discontinues or fails to operate, check the power supply. If the heater still does not operate, the Temperature Overload Switch may be tripped.

To Reset the Overload Switch:

- Turn off power supply.
- Remove grille to access the **Overload** switch.
- Using a pencil or small screwdriver, press the red **Reset** button down.

BEFORE PUSHING THE BUTTON: Allow 10 minutes for unit to cool, (2) Clean inside heater, (3) Push reset button. If heater does not turn back on after pushing reset button, the heater may be damaged. See Owner's Guide for more information.

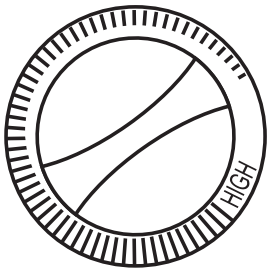

WARNING! TO AVOID ELECTRICAL SHOCK
Disconnect power at circuit breaker panel or fuse box before servicing.
CADET MANUFACTURING CO.
MODEL: UC101
WATTS: 1000
AC VOLTS: 120, 60HZ
C UL US
LISTED AIR HEATER 680J
070417 Rev.A

030940

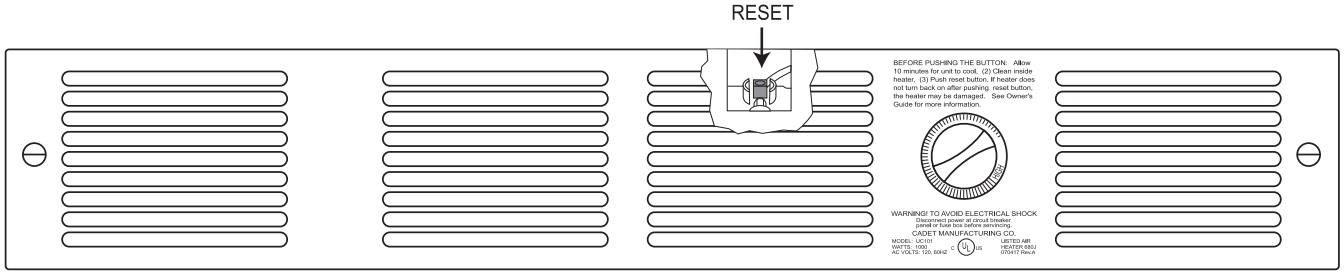

030939

WASHER-DRYER

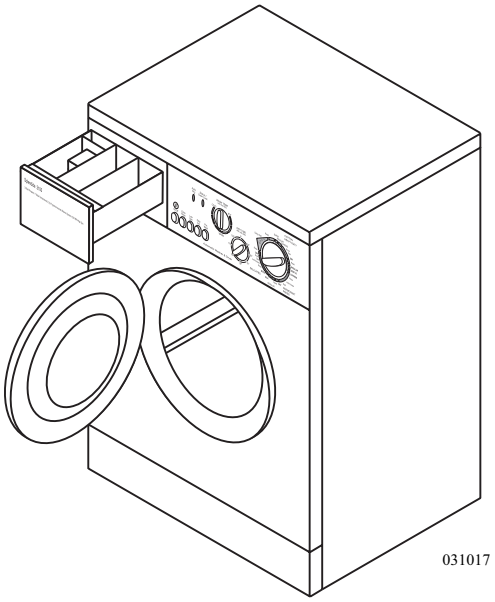

The automatic washer-dryer is front loading with an extra large door opening for easier access. Several wash and dry programs are available along with variable water temperature settings.

- The washer-dryer operates on 120 Volt AC from shore power or the generator.
- The washer-dryer will use approximately 12 to 20 gallons of water per wash cycle.

NOTE:
Only one of the following can be used at a time: bedroom A/C, washer-dryer, or cooktop (All-Electric only) due to the automatic appliance selector limiting use of appliances according to priorty to prevent electrical overload.

INFORMATION:
The washer-dryer has many features. Refer to the manufacturer's manual in the owner's information file for detailed operating instructions.

WARNING:
Open a window or vent while operating the dryer. The washer-dryer can create negative air pressure inside the motorhome that can accumulate Carbon Monoxide or LP-Gas while operating fuel-burning appliances.

CAUTION:
Do not use the washer-dryer while traveling. Suspension movement, combined with the weight of the drum while in the wash cycle, can damage the internal components of the washer-dryer.

Test Procedure

Before using the washer for the first time, after winter storage or a long period of non-use, conduct a simple test procedure to verify that all the hardware and electronic components are functioning. Wipe the interior and exterior of the washer-dryer with a damp cloth to remove dust that has accumulated.

NOTE:
Perform this test before putting the washer-dryer in use for the first time or after the winter months. This will clear the water lines and drum of winterization antifreeze.

Test Procedure Requirements:

- Make sure water lines are secure and water valves are open.
- Hook to city water or turn on the water pump.
- Hook to shore power or start the generator.

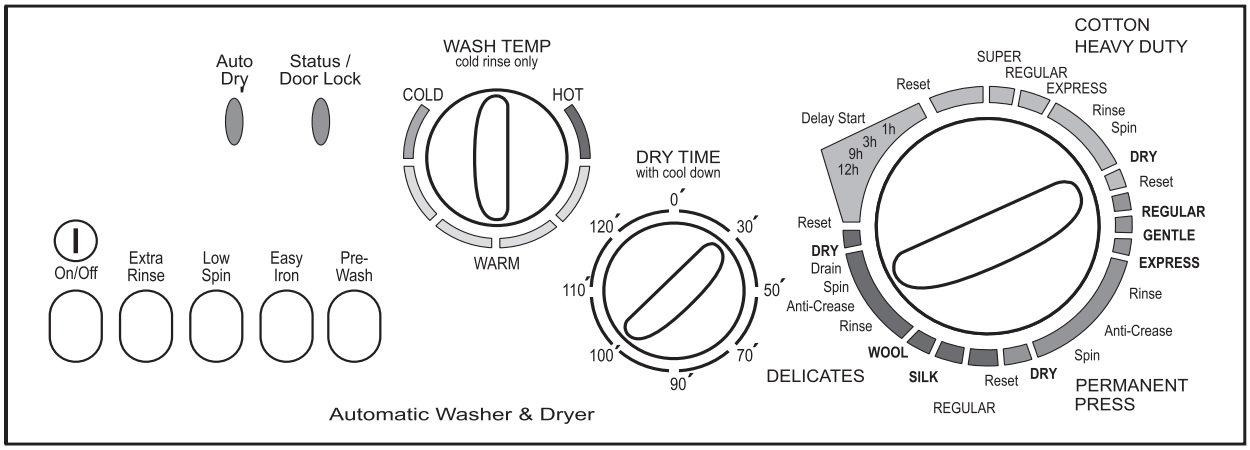

031017c

To Conduct the Test Procedure:

1. Set the selector knob to **Reset**.
2. Set the **Dry Timer** knob to 30 minutes. Push the **On/Off** button to **On**. Wait five seconds. The **Auto Dry** light should be on and the **Status** light flashes fast then slow.
3. Set the selector knob to a wash cycle. Set **Wash Temp** knob to **Warm**. Water should flow into washer and the drum should rotate both directions.
4. Set the selector knob to **Reset**. Wait five seconds.
5. Set the selector knob to **Spin**. Water should drain and the drum rotation should speed up.
6. Set the selector knob to **Reset**. Wait five seconds.
7. Set the selector knob to **Dry**. Dryer fan should begin and the drum should rotate both directions.
8. Set the selector knob to **Reset**. Wait five seconds.
9. Set the **Dry Time** knob to zero. The **Auto Dry** light should go off.
10. The door will unlock in two minutes or less. The **Status** light flashes fast then slow. The door should now open.
11. Push the **On/Off** button to **Out** (Off) position. The **Status** light should be off.

WARNING:
Do not wash or dry articles that have previously been cleaned, washed, soaked or spotted with gasoline, dry cleaning solvents or other flammable or vaporous substances that could ignite or explode. Do not add gasoline, dry cleaning solvents or other flammable or explosive substances to the wash water.

CAUTION:
Do not use heat to dry articles containing foam rubber or similar textured, rubber-like materials.

To begin a wash load:

- Sort and pre-treat clothes.
- Add the measured amount of detergent suggested by the package directions (maximum two tablespoons).
- Load the laundry loosely into the washer. Close the washer door.
- Turn the Wash Temperature knob to the desired temperature setting.
- Choose the desired washing cycle option using the Selector knob.
- Load wash tray with detergent.
- Turn the power ON.
- After the cycle is complete, wait two minutes for the door lock to release before attempting to open the door.

Washer-Dryer Maintenance

Occasionally wipe the exterior cabinet of the washer-dryer with a damp cloth or sponge. Wipe dry with a soft cloth. Do not use polish on plastic trim. In areas of hard water, detergent can accumulate in the drum. Obtain a packaged water softener. Add quantity as specified by the manufacturer directly to the drum. Run the washer through a complete cycle using hot water. Repeat the process if necessary. Remove hard water deposits using only cleaners labeled as washer safe. Wipe the inside of the washer-dryer door with a soft cloth to remove moisture. Periodically apply a thin coat of paste wax to the inner door, especially to the area that is immediately next to the door window. This will protect the door finish from laundry spills and discoloration.

If water flow to the washer-dryer is reduced, the Hot and Cold water inlet screens may be clogged. Remove water pressure and undo water lines at the back of the washer-dryer. Use tweezers or pliers to remove screens from fittings. Clean and install screens and water lines. Hook to city water or turn on the water pump. Check for water leaks before using the washer-dryer.

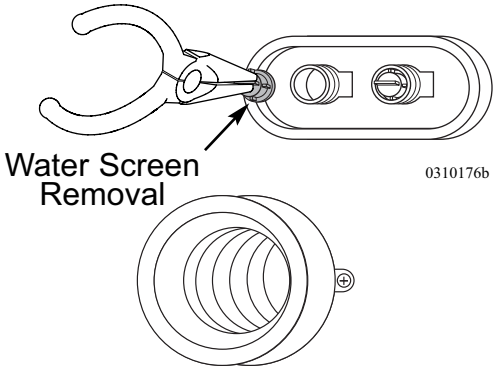

NOTE:
Should the washer-dryer need removal for service, care should be taken as the washer-dryer weighs approximately 170 lbs. Proper accommodations should be made to avoid risk of injury or damage to the cabinetry.

Winterizing the Washer-Dryer

To Winterize the Washer Dryer with Air Pressure:

1. Hook an airline (regulated to 45 psi or less) to the water inlet of the motorhome.
2. Rotate Selector knob to a wash position with the Wash Temp setting on Warm. Press the power button to On. Air pressure will clear the Hot and Cold water lines.
3. After water lines are clear, rotate Selector knob to Spin. Allow the pump to drain the drum.
4. Set Selector knob to Reset and Timer to zero. The door will unlock in two minutes or less. Open door and pour in ¼ gallon of RV antifreeze.
5. Set Selector knob to Spin. The pump will prime with antifreeze. Set selector knob to Reset and turn the power off.

To Winterize the Washer Dryer Using RV Antifreeze:

Two methods of introducing antifreeze to the water system can be used. Add antifreeze directly to the water tank or use a separate container of antifreeze with water line hooked to the intake side of the water pump.

1. Turn on the Water Pump. Rotate Selector knob to a wash position with the Wash Temp setting on Warm. Press the power button to On. Allow antifreeze to enter the drum.
2. After water lines are filled with antifreeze, rotate Selector knob to Spin. Allow the pump to drain the drum.
3. Set Selector knob to reset and Timer to zero. The door will unlock in two minutes or less. Turn the power off.
4. Any remaining liquid should contain a sufficient amount of antifreeze to be protected from freezing.

NOTE:
After winter, perform a Test Procedure before washing or drying any laundry to make sure all antifreeze has purged.

WASHER (Optional)

The Whirlpool stackable washer is a large capacity automatic washer with seven cycles and four water levels. Other features include a bleach dispenser, fabric softener dispenser and lint filter.

- The washer operates on 120 Volts AC from shore power or generator power.
- The washer will use between 16 and 35 gallons of water per load depending on cycles and water levels chosen, as well as the volume of laundry.

CAUTION:
Do not use the washer while traveling, as damage will occur to the washer and motorhome.

NOTE:
Motorhomes equipped with a centrally located washer-dryer unit have a dedicated washer-dryer breaker located in a hall cabinet.

NOTE:
Due to the automatic appliance selector limiting use of appliances according to priorty to prevent electrical overload, only one of the following can be used at a time: bedroom A/C, washer-dryer or cooktop (All-Electric only).

NOTE:
Monitor fresh water and grey water tank levels when not hooked to city water and/or sewer.

INFORMATION:
The washer has many features. Refer to the manufacturer's manual in the owner's information file for detailed operating instructions.

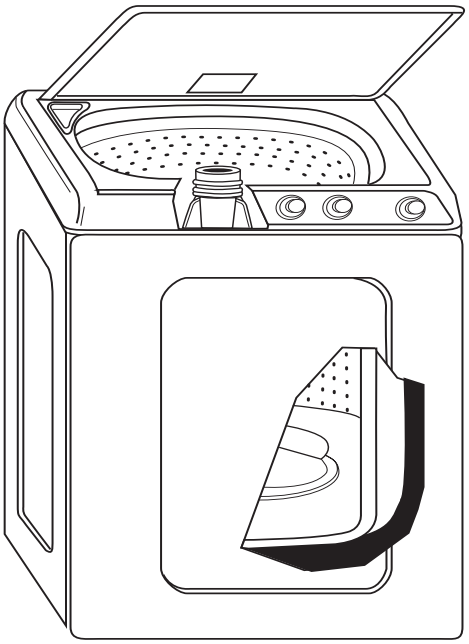

031104

Test Cycle

Before using the washer for the first time after a long period of non-use, run a test cycle. The test cycle will confirm the unit is working correctly, remove RV antifreeze that may be present and verifies all hardware, plumbing and electronic components are functioning.

Test cycle requirements:

- Wipe the exterior and interior of the unit with a damp cloth to remove dust that has accumulated.
- Make sure water lines are secure and all the necessary valves are open to supply water.
- Hook to city water or turn on the water pump (must have sufficient water in tank).
- Hook up to shore power or turn on the generator.

Conducting test cycle:

1. Measure one cup of detergent and pour into washer.
2. Close the washer lid.
3. Set the load selector to extra small.
4. Select water temp **Hot/Cold**.
5. Turn cycle knob to **Delicates**.
6. Push the **Start/Pause** button.

NOTE:
The cycle selector knob will not rotate as the cycle progresses. The cycle status lights indicate the operation being performed within the cycle. When all the cycle lights are off, the cycle is complete.

Operating Instructions

1. Measure detergent and pour into washer. If desired add powdered or liquid color-safe bleach.
2. Drop a sorted load of laundry loosely into the washer. Load evenly to maintain washer balance. Mix large and small items.
3. If desired (optional step), add a measured amount of liquid chlorine bleach to the liquid bleach dispenser.
4. If desired, add liquid fabric softener to the liquid fabric softener dispenser.
5. Close washer lid.
6. Set the load size (water level).

NOTE:
Make sure there is room available in the grey tank if not hooked to sewer.

7. Select the water temperature using the water temperature selector. (Use the warmest water safe for fabric washed.)
8. Turn the cycle selector knob to appropriate selection.
9. Push the **Start/Pause** button to start the washer.

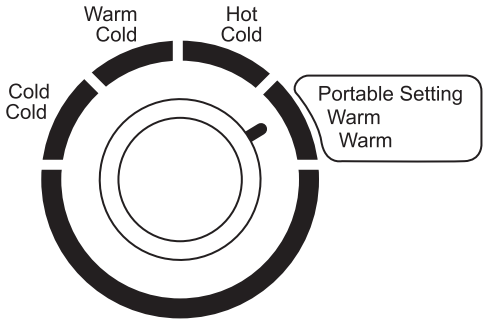

Temperature Settings

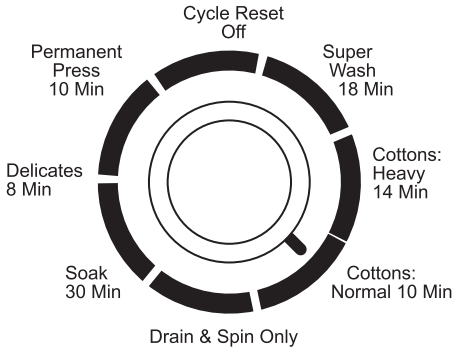

Cycle Selector

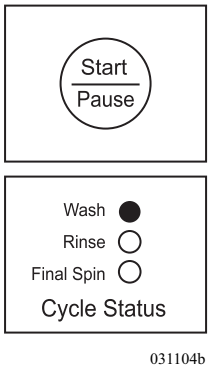

Cycle Status Indicator

<u>NOTE:</u>
The cycle selector knob will not rotate as the cycle progresses. The cycle status lights indicate the operation being performed within the cycle. When all the cycle lights are off the cycle is complete.

<u>WARNING:</u>
Do not wash articles that have previously been cleaned, washed, soaked or spotted with gasoline, dry cleaning solvents or other flammable or other vaporous substances that can ignite or explode. Do not add gasoline, dry cleaning solvents or other flammable or explosive substances to wash water.

<u>CAUTION:</u>
Do not use heat to dry articles containing foam rubber or similar textured, rubber-like materials.

To Clean the Lint Filter:

1. Pull upward on the fabric softener dispenser to remove it from the agitator.
2. Use a finger to clean the lint from the lint filter as shown in the illustration.

NOTE:
Clean the lint screen, (located on the agitator, below the fabric softener dispenser) after each use.

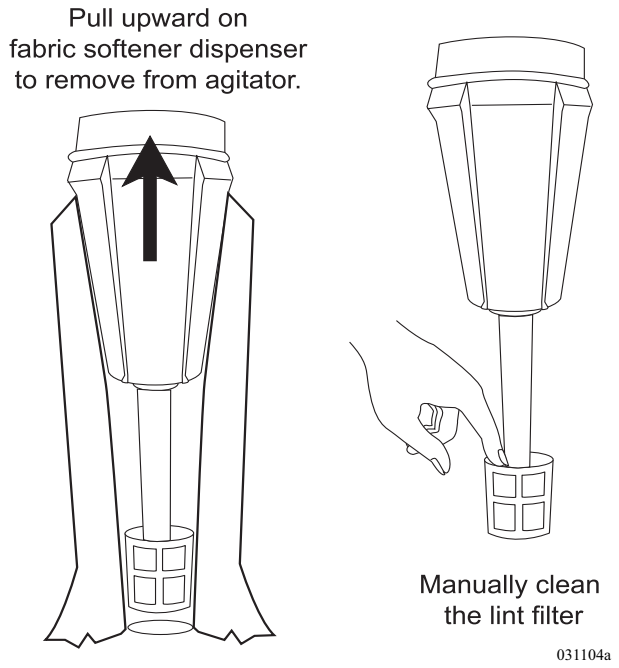

Cleaning the Washer

To clean the exterior, use a soft damp cloth or sponge to wipe up any spills such as detergent or bleach. To clean the interior, mix one cup of chlorine bleach and two cups of detergent. Pour the solution into the washer and run it through a complete cycle using hot water.

NOTE:
Cleaners used to remove hard water deposits must be labeled as safe for washers.

Winterizing the Washer

To Winterize the Washer:

1. Shut off both water faucets.
2. Disconnect and drain water inlet hoses.
3. Put one quart of RV type antifreeze in the basket.
4. Run the washer on **Drain & Spin Only** setting for about 30 seconds.
5. Unplug or disconnect power to washer.

NOTE:
When returning the unit to service be sure to run it through a complete cycle with a cup of detergent to purge the antifreeze from system before using the washer for laundry.

DRYER (Optional)

The Whirlpool® dryer is front loading, and operates on 120 Volt AC from shore power or the generator.

Features Include:

- Electronic Dry-Miser®
- 3 Cycles
- Timed Drying
- Side Swing Door
- Gentle Heat System
- Interior Lint Screen
- 2 Temperature Settings

INFORMATION:
Read the instructions in the dryer manufacturer's Care and Operations Guide located in the owner's information file.

CAUTION:
Open a window or vent while operating dryer. Negative air pressure inside the motorhome can be dangerous while operating fuel burning appliances.

CAUTION:
Do not use the dryer while the motorhome is in motion as it can damage internal components of the dryer.

NOTE:
Before using the dryer, wipe the dryer drum with a damp cloth to remove dust from storage and traveling.

NOTE:
Due to the automatic appliance selector limiting the use of appliances according to priorty to prevent electrical overload, only one of the following can be used at a time: bedroom A/C, washer-dryer or cooktop (All-Electric only).

Dryer Operation

To operate the dryer you will need to be hooked up to shore power or generator power.

WARNING:
Do not dry articles that have previously been cleaned, washed, soaked or spotted with gasoline, dry cleaning solvents or other flammable or other vaporous substances that can ignite or explode. Do not add gasoline, dry cleaning solvents or other flammable or explosive substances to wash water.

CAUTION:
Do not use heat to dry articles containing foam rubber or similar textured, rubber-like materials. Clean the lint screen, (located inside the dryer) after each use. Keep the exhaust opening area, and adjacent areas, free from accumulation of lint, dust and dirt.

To Operate the Dryer:

1. Load laundry loosely into dryer and close the door. Allow space for the clothes to tumble freely.
2. Turn the cycle control knob to the recommended cycle for the type of load being dried. Use the energy preferred automatic setting to dry most heavy-weight and medium-weight loads.
3. Push the **START** button.
4. To stop the dryer, open the door, or turn the Cycle Control Knob to **OFF**.
5. An audible signal will sound when cycle is complete.

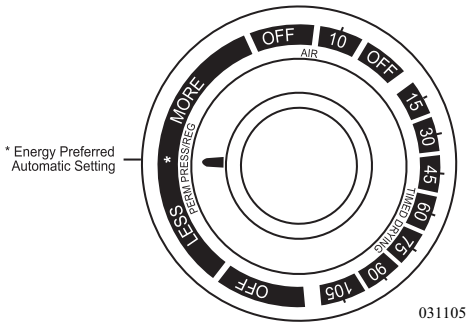

Cycle Control Knob

Dryer Maintenance

Clean the lint screen after each load:

- Open the door and pull the lint screen straight out.
- Squeeze body of lint screen slightly while pulling off cover.
- Roll lint off screen with fingers. Do not rinse or wash screen to remove lint. Wet lint is hard to remove.
- Replace cover on lint screen body. Push the lint screen firmly back into place and close the door.

CAUTION:
Do not run dryer with lint screen loose, damaged, blocked or missing. Doing so can cause overheating and damage both the dryer and fabrics.

WARNING:
Never use flammable cleaners to clean the any part of the dryer. Failure to comply with this warning could result in fire, explosion, injury, and/or death.

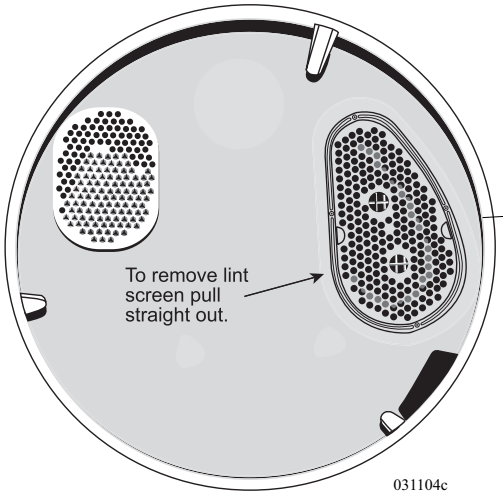

Dryer Drum

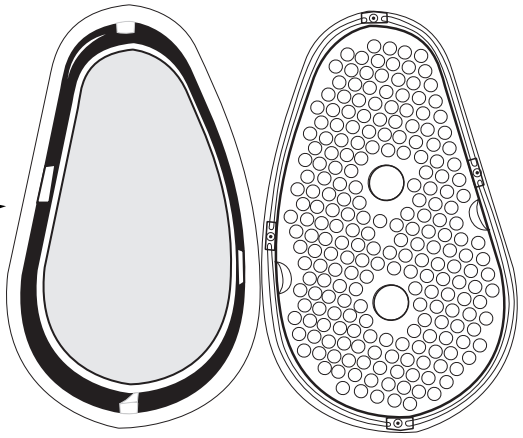

Lint Screen & Lint Screen Cover

To Clean the Dryer Drum:

- Apply a paste of powdered laundry detergent and very warm water or a liquid, non-flammable household cleaner to the stained area. Rub with soft cloth until all excess dye is removed.
- Wipe drum thoroughly with cloth dampened with clean water.
- Tumble a load of cloths or towels to dry drum.

INFORMATION:
Whirlpool customer service can be reached at 1-800-253-1301.

DISHWASHER (Optional)

The dishwasher requires an averaging of 2.4 gallons for a standard wash cycle. Variable water pressure, specific temperatures (up to 165° F) and a flexible racking system are some of the features.

The dishwasher compartment has the capacity to hold:

7 dinner plates	7 soup bowls
7 place settings of cutlery	7 dessert plates
7 saucers	7 cups

Requirements for Dishwasher Operation:

- Power requirement is 120 Volts AC 15 Amp supplied by shore power or the generator.
- Hook to city water or turn on the water pump. Inlet water pressure is 4.3 psi (minimum) to 120 psi (maximum).
- The motorhome must be level.

To Operate the Dishwasher:

1. Remove all scraps of food and load dishes. Wash water comes from the spray arm. As the arm rotates, wash water will be provided to all areas. Care needs to be taken when loading the dishes to ensure there is sufficient space for the water to reach all areas.
2. Located inside the dishwasher dispenser are two compartments; **Pre-wash** and **Main wash**. The Pre-wash markings are in one teaspoon increments. Main wash compartment markings are in two teaspoon increments.

NOTE:
Use only powdered detergent. Liquid and Tablets are not recommended for use. It is highly recommended to regularly use a liquid rinse agent for best drying results. The rinse agent dispenser is located inside the dishwasher and holds approximately 1.7 fluid ounces of rinse agent.

3. Press the **Power Button** to turn the dishwasher on and off. If the Power button is pressed in mid cycle, the wash program will end and water will pump out. Opening the door will automatically power up for 30 seconds ONLY.
4. Select the desired wash program. Standard programs are Heavy, Normal, Fast, Delicate and Rinse.

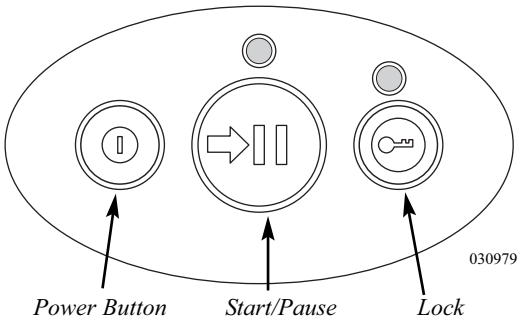

030980

5. Ensure the drain filter is flush with the filter plate and the spray arm can easily rotate.
6. Close the dishwasher and press the **START/PAUSE** button to begin wash program. To pause, press the **START/PAUSE** button and wait for three beeps prior to opening. Simply press the **START/PAUSE** button to restart.
7. Six beeps indicates the end of the wash program. The drying fan will continue to run for a set time or until the door is opened.

NOTE:
It is normal for some water to remain in the drain filter area after the wash program is complete.

NOTE:
In the event the dishwasher is operating and a power outage occurs, the dishwasher will stop and may not open. When power is restored, the dishwasher will resume the wash program.

Preparing the Dishwasher for Storage:

If the dishwasher is not used for an extended period, it is recommended to ensure the baskets are empty. Clean and dry the inside compartment. Leave the door ajar to allow air circulation. Shut off power and water supplies to the dishwasher.

INFORMATION:
For Winterization of Dishwasher, refer to the Dishwasher Manufacturer owner's manual.

~ NOTES ~

~ NOTES ~

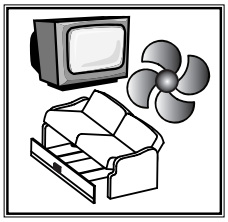

Signature 2005

Equipment • Section 5

EQUIPMENT - INTRODUCTION 209
ENTRY STEP.....209
Operation.....209
Tips.....210
Stepwell Cover.....211
ENTRY DOOR.....212
Air Seal.....212
Latch Adjustments.....213
Screen Door 213
Door Bell 214
KEYLESS ENTRY 215
Bay Doors - Unlock 215
Keyless Entry Code Programming.....216
Key Fob 216
SLIDE-OUT OPERATION.....217
Extending & Retracting Slide-out Rooms.....218
Manual Override 220
AWNINGS 221
Four Channel Remote.....221
Patio Awning 222
Window Awning.....224
Door Awning.....225
Slide-out Cover.....226
Awning Care & Cleaning 226
FANS 227
Exhaust Fan.....227
Bathroom Fan 228
BLINDS - COCKPIT (Opt.) 229
POWER SHADES (Opt.) 229
POWER SUNVISOR 229
DOOR - SLIDING.....230
PRIVACY DRAPERY ELECTRIC (Opt.) 230
SEAT CONTROLS 231
Swivel Seats.....232
SOFA BED CONVERSION 232
DINETTE BED CONVERSION (Opt.) 233
AIR MATTRESS BED 233
Troubleshooting 234
STORAGE - UNDER BED 235
SUPER SLIDE (Opt.) 236
POWER SUPER SLIDE (Opt.) 236
LADDER - REAR 237
CITIZEN BAND (CB) RADIO 238
CELL PHONE ANTENNA.....239
RECEIVER-MONITOR 239
GPS Navigation.....240
ALADDIN™ SYSTEM 240
Operations.....241
System Options 243
Compass Calibration.....243
SATELLITE RADIO (Opt.) 244
ROOF ANTENNAS 244
TV & ENTERTAINMENT COMPONENTS.....245
Television (Front) Lockout Feature.....245
Connections - Cable TV, Computer & Phone.....245
Television Inputs 245
Television - Ceiling Mounted (Opt.).....246
Antenna Boost.....246
TV Antenna.....246
Television - Flat Screen LCD 248
Operating the Components.....248
Bose System 250
SATELLITE SYSTEMS 251
In-Motion System 253
TV/ENTERTAINMENT SYSTEM - BEDROOM.....254
Radio - Bedroom 255
UNIVERSAL REMOTE 256
Bedroom Panel 258
TV/ENTERTAINMENT SYSTEM - EXTERIOR.....259

This section covers the basic operation and care of various types of equipment found in the motorhome, most of which are provided for entertainment and comfort. More detailed information about specific equipment may be found in that particular manufacturer's manual. Optional equipment will also be discussed in this section which may not apply to all motorhomes.

INFORMATION:
Detailed information with CAUTION or WARNING instructions for the various electronics, other than what is provided in this section, can be found in that specific manufacturer's manual.

ENTRY STEP
Operation

The entry step includes the exterior electric entry step, which features retractable steps, automatic retraction with the ignition key in the RUN position and a last out feature. The step switch is located on the center dash console, below the dash A/C controls. The bar light indicator on the switch, when illuminated, indicates the circuit is active.

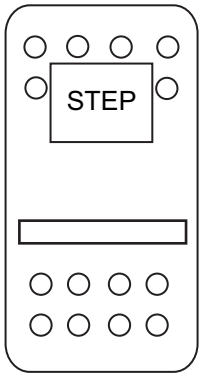

080335c

NOTE:
When dry camping, turn the Entry Step switch off to prevent unnecessary step actuation and draining of the chassis batteries.

Operating the Entry Step:

1. With the entrance door open, turn the step switch on.
2. Close the door. The step should retract and lock in the IN position.
3. Open the door. The step should extend and lock in the OUT position. The step will retract when the door is closed.
4. When the switch is turned off, the step should remain in the extended position with the door closed. Close the door and turn on the ignition switch. The step will retract for travel.
5. With the power switch off, the step extended, the entrance door closed and the ignition turned on, the ignition override system will engage to automatically retract the step.
6. Turn the ignition off and open the door. The step will extend and lock in the OUT position. This is the "last out" feature. When the ignition is on the step will always activate with door movement, regardless of the power switch position.

CAUTION:
High curbs can impede step operation. Use care when parked on side streets.

Tips

If the step fails to operate:

- Verify that the step switch is ON.
- Check the main power supply for the step: a 20 Amp fuse located at the rear run box on the R4 circuit board.
- A magnetic door jam switch is used to control step operation. Use a separate magnet to apply a "trigger" to the door jam switch. Rotate test magnet to align polarity field.
- A 5 Amp ATO blade fuse is used to illuminate the **STEP OUT** dash warning light. The fuse is located at the front run box, labeled **STP IGN**.

CAUTION:
If the Step Out warning indicator lamp is illuminated while the motorhome is in motion, the entry step is either partially or fully extended. Repair the step as soon as possible to avoid serious damage to the entry step or motorhome.

Lubrication:

Keeping the step clean is essential for smooth and reliable operation. Before applying a dry spray lubricant or graphite on the slide mechanisms, thoroughly clean the step using a pressure washer or a stiff nylon bristle-brush and automotive detergent. Allow the step to thoroughly dry.

CAUTION:
Keep fingers, clothing and other hardware away from moving components.

NOTE:
Clean and lubricate step more frequently in adverse weather conditions. Mud, snow, road salts and sand quickly breaks down lubricant and corrodes painted surfaces.

NOTE:
Only use a dry spray lubricant or graphite on the slide mechanisms. Do not use Kwik Lube spray lubricant. The slide mechanisms will become clogged with road grime accumulation.

- Lubricate points with graphite or a dry spray lubricant.
- Work step several times, allowing lubricant to work into surfaces.
- Repeat as necessary.
- Remove excess lubricant.
- Periodically apply di-electric grease at electrical connections.

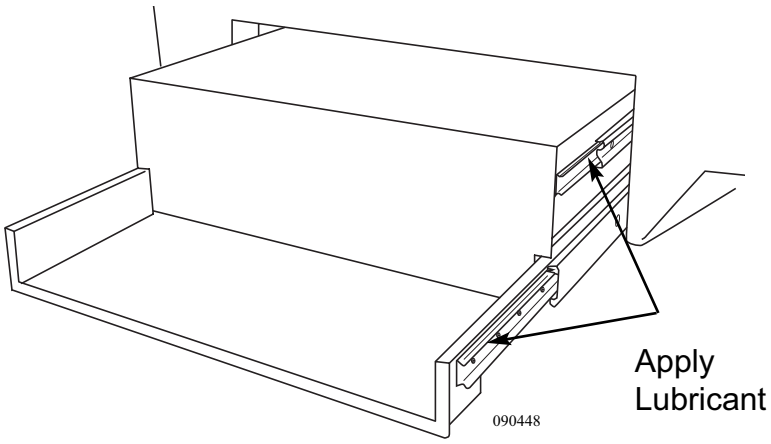

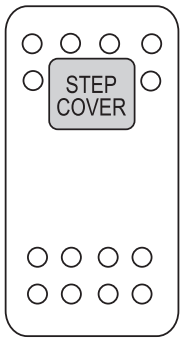

080424

An electrically operated air valve controls an air cylinder to extend and retract the stepwell cover. The air valve will direct the air pressure to either side of the dual action air cylinder, moving the stepwell cover in or out. The stepwell cover will not operate without sufficient air pressure in the system (approximately 60 psi).

CAUTION:
The stepwell cover is under air pressure. When operating the stepwell cover, make sure there are no pets, shoes or other obstructions in the stepwell area. Do not operate the stepwell cover while standing in the stepwell area.

Adjustments:

The air solenoid is located in the front of the motorhome, behind the generator door mounted to the firewall. The easiest way to identify the location is have someone operate the stepwell cover with the generator door open and listen for the release of air.

The air solenoid has two adjustment screws to regulate air flow to either side of the air cylinder. Adjusting the screws will affect the speed in which the air cylinder moves in or out: Clockwise adjustment to decrease air flow and counterclockwise adjustment to increase air flow. For proper stepwell cover operation it is recommended that adjustments be performed by a qualified service person.

WARNING:
When adjusting the stepwell cover clear the stepwell area of obstructions, pets or persons. Do not adjust the stepwell cover while stepwell area is occupied.

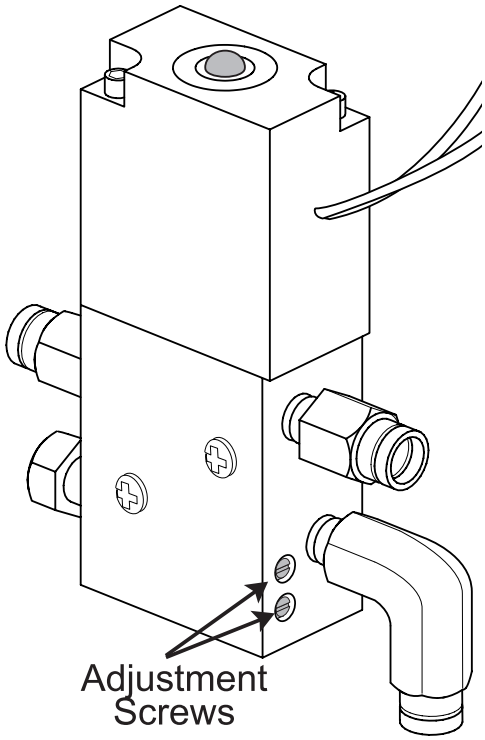

Air Solenoid 090387

ENTRY DOOR

The entry door incorporates three separate seals to eliminate wind noise during travel. The door uses two separate locks for safety and security: the door handle and a dead bolt. The door handle incorporates a primary and secondary latching system used to ensure secure and safe latching. Adjustments can be made to help maintain entry door performance.

Air Seal

The entry door is equipped with a one-piece air seal to reduce wind and road noise.

- The seal automatically inflates when the engine is running and the transmission shift selector is placed in Drive.
- The entry door seal will inflate to approximately 3 to 4 psi.
- The pressure regulator control valve is located behind the front cap on the left side of the generator.
- When the transmission is placed in neutral, the entry door seal will deflate.

CAUTION:
If the pressure regulator should require adjustment, do not exceed 5 psi. Damage to the seal may occur.

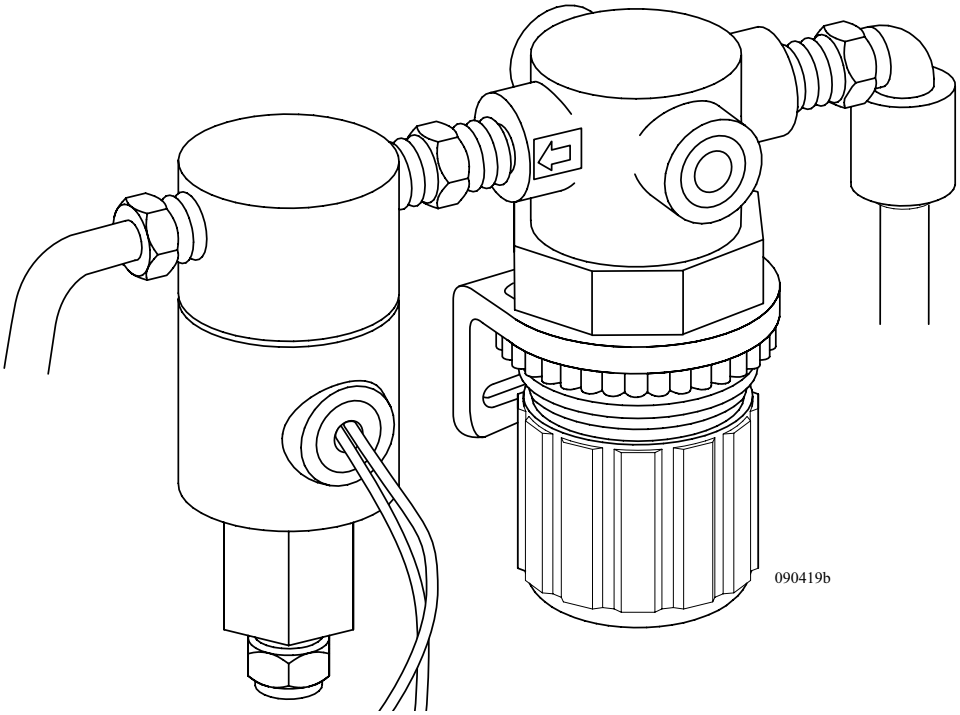

Door Seal Regulator

Latch Adjustments

Adjusting the Entry Door Latch:

- Determine which bolt needs adjustment.
- Slowly close the entry door observing the latch and strike bolt alignment. Do not attempt to latch if alignment is off. If the alignment is correct, allow the latch to catch in the first (primary) position only.
- The latch should move to the second position with just slight pressure applied to the entry door. Upper and lower latches should be evenly timed. Press on the entry door to see if there is further movement of the door.
- The handle should operate with little effort to open the entry door. Excessive amounts of pressure indicate the bolts are set too far back.
- With a 5/8" inch box wrench or socket, loosen the movable strike bolt. Make all adjustments in small increments. Tighten the bolt firmly after making adjustments. The bolts should have slight up and down movement for vibration control in travel.
- Test the operation of the dead bolt lock to ensure proper function.
- Apply silicone weekly to the entry door rubber gaskets to prevent squeaking while the motorhome is traveling. Use a one inch sponge paint brush, sprayed with silicone, for easy application.

CAUTION:
When operating the entry door ensure the dead bolt latch is fully in the unlock position prior to closing the entry door. Failure to do so can result in damage to the dead bolt and/or entry door.

Screen Door

Changing the Glass in the Screen Door:

- The screen slider is *Lexan* and can be bowed for removal and replacement.
- Replace with new *Lexan* and reverse the procedure.

Adjusting the Screen Door for In and Out Location:

- Loosen the chrome bolts on the hinge side of the screen door: Two on each of the three hinges.
- Slots in the steel hinge allow for in and out movement.

Removing the Screen:

- The top half of the screen door is removable to allow clear viewing through the entry door glass while traveling.
- Rotate the clips to remove the top half of the screen door. Store for travel.

Door Bell

The door bell button is located next to the entry door on the outside of the motorhome. The two-tone door bell chime is located in the vanity cabinet just under the sink. A momentary switch completes the 12 Volt DC circuit, activating electromagnets to pull a plunger down against a measured resonant metal plate and compress a coil spring. When the electromagnet releases, the spring forces the plunger up against another resonant metal plate with a different tone.

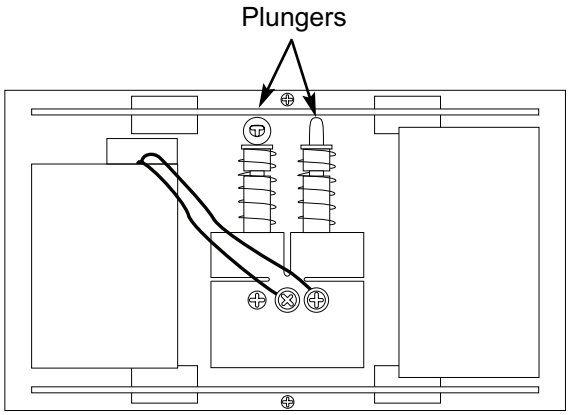

Door Bell Chime: Face-plate removed. 031081b

<u>NOTE:</u>
If the chimes seem sluggish, the plungers can be cleaned with compressed air. Never oil chime plungers.

Exterior Door Bell Button

If the chime fails to work, check the 2 Amp doorbell fuse on ATC Fuse Panel. If the fuse immediately blows again, there may be a short in that circuit and consulting a technician is recommended.

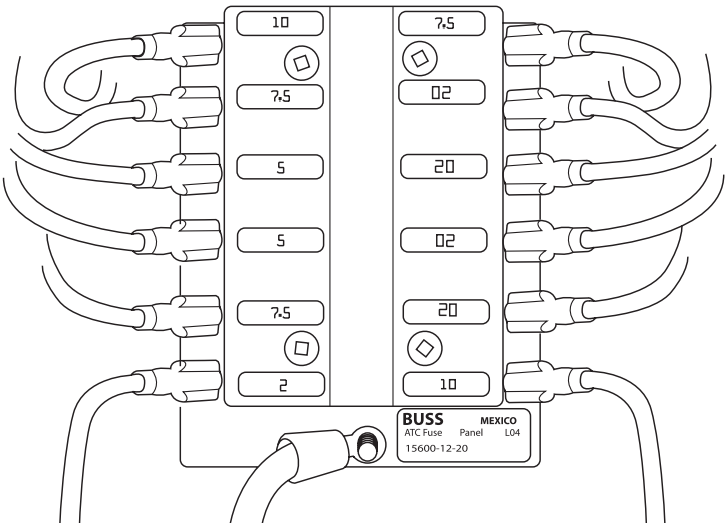

ATC Fuse Panel: Located in the hall or bedroom closet. 060273

Fuse	Amps	Circuit	Color
1	5	Vanity Fan	Orange
2	5	Lavatory Fan	Yellow/Black
3	20	Bedroom Pin Lights	Green
4	2	Bedroom Ceiling Fan	Blue
5	20	Galley & Pantry Fluorescent - Kool-A-Matic	Purple/Black
6	3	Multiplex CPU Power	Red
7	10	Toilet & Satellite	Red
8	5	Cockpit Blinds	Red
9	2	Roof A/C Power	Blue/White
10	2	Doorbell	Purple
11	30	Electric Sofa - Option	Green/Black
12	15	Ozone Water Filter - Option	Black/White

Entry and bay door locks can be operated using the touch keypad located adjacent to the entry door. Three lock codes are pre-assigned and are unavailable for future use as unlock codes.

- **555 -** Locks entry door and bay doors if connected.
- **557 -** Locks entry door and bay doors if connected.
- **559 -** Locks entry door and bay doors if connected and arms keypad (flashes momentarily once every 15 seconds).

NOTE:
Due to preassigned codes, number(s) 5/6 cannot be used at the beginning of a new unlock code.

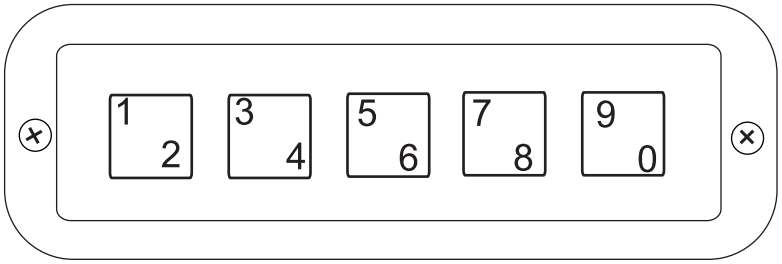

030883B

Unlock codes should be personalized upon receiving the motorhome. Unlock codes have two categories: **Master** and **Optional codes**. Master code enables motorhome entry and auxiliary control. Deleting, adding or changing of Optional codes are performed at the Master code level.

INFORMATION:
Consult the system owner's manual for further information.

- **To lock:** Shut the door. Enter one of the three lock codes to lock the entry door and bay doors, if connected.
- **To unlock:** Enter Factory Default Master code or a three to eight digit personalized Unlock code, if programmed.

Bay Doors - Unlock

The keyless entry system can be used to unlock selected bay doors.

To unlock the bay doors using the keyless entry system:
- Enter the programmed **unlock** code. The entry door will unlock.
- Within five seconds of the first sequence of numbers entered, press the number **9**.

Keyless Entry Code Programming

All motorhomes equipped with the keyless entry are shipped from the factory with default settings. It is recommended the unlock code be personalized for security purposes.

To Program a Personal Number:

1. Located under the co-pilot cup holder is the Programming Switch, identified by a small black button with 22-gauge wires connected: **Yellow** is power - **Black** is ground.
2. Press the Programming Switch until four (4) rapid beeps are audible.
3. To open the memory for accepting the personalized Master Code, enter **1119** on the keypad at the entry door.
4. Enter the new 3 to 8 digit master unlock code within five seconds.
5. Wait five seconds for two (2) rapid beeps.
6. Test the new Unlock Code.
7. If the code was not accepted, repeat the procedure.

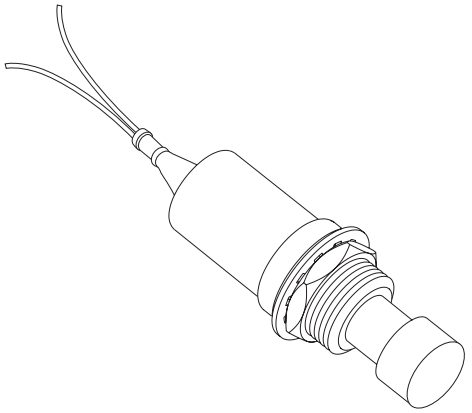

WARNING:
Ensure possession of entry door keys prior to testing new personal code.

NOTE:
These instructions are for motorhomes equipped with "keyless entry" only.

Key Fob

Keyless Entry Key Fob:

The motorhome is equipped with a Key Fob to unlock and lock the entry door and the bay doors.

- Upper left button on the Key Fob is used to lock the entry door.
- Upper right button is used to unlock the entry door.
- Bottom left button is used to unlock and lock the bay doors.
- Bottom right button is not assigned.

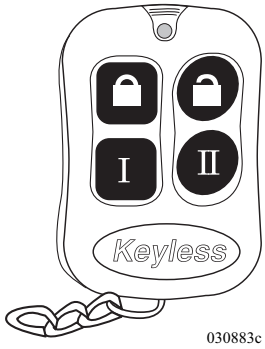

NOTE:
The key fob operation distance is approximately within 50 feet of the motorhome. If the door locking mechanism is not audible, the marker lights will flash when the doors are unlocked or locked.

NOTE:
During any service work, it is recommended all key fobs be left with the motorhome for thorough testing and check procedure.

If a Key Fob fails to respond, confirm battery power. If the battery has power, the Key Fob may need to be authorized.

To Authorize a Key Fob:
- Locate the keyless entry receiver box behind the instrument cluster.
- Turn the ignition switch to the ON position.
- Locate the program button (red).
- Situate Key Fobs within reach.
- Hold down the program button for five (5) seconds.
- While holding down the program button, press the Lock button on the Fob.
- Release the program button.
- Turn the ignition switch off.
- Test the remote Key Fob.
- Repeat the above steps for additional Key Fobs.

NOTE:
If the motorhome is factory equipped with an optional security system, the security system remote will lock or unlock the entry door and bay doors when the system is armed or disarmed. However, if the entry door is locked and armed with the security Key Fob, it must be unlocked with the security Key Fob to disarm the security system. Using the keypad to unlock will not disarm the system.

SLIDE-OUT OPERATION

Slide-out rooms operate by electric switches controlling hydraulic cylinders. Slide-out room operation uses safety features to prevent mechanical damage or physical harm. Slide-out room(s) will not operate until all safety requirements are met.

Safety Requirements:
- Ensure the ignition key is in the OFF Position.
- The park brake must be applied.
- Bay doors must be closed.

Guidelines to ensure long life of Slide-out system:

- **Inspect** the roof of the slide-out for debris such as pine needles, dirt, leaves, sticks, etc. Any debris left on the top may cause damage to the seals during retraction. If debris is present, wash with soap and water, then rinse.
- When the room is out, visually **inspect** the wipe seal for dirt or other foreign material and for tears.
- In the event the slide-out room leaks, fully retract the room. If necessary, tape the exterior opening closed with duct tape until repairs to the motorhome can be completed.
- Open a window or vent to equalize pressure during slide-out operation.

NOTE:
Do not use petroleum based products on the slide-out seal. Petroleum based products can damage the paint and will cause premature aging of the rubber seal.

WARNING:
Move the driver seat forward before activating the slide-out room. The outside area must be clear of obstructions that can restrict slide-out room operation. Ensure there is five or more feet of clear space outside the slide-out room prior to extending the room or damage to the slide-out, the motorhome or property can occur. When retracting the slide-out room, ensure there is sufficient clearance inside the motorhome. Never move the motorhome with any slide-out room extended.

CAUTION:
Continuous operation of the slide-out room can drain the batteries and damage the motor by overheating.

WARNING:
Firmly latch all cabinet doors adjacent to the slide-outs before extending or retracting the rooms. Damage to doors or the fascia may occur.

NOTE:
Do not leave the slide-out extended during severe weather. Conditions such as high winds or heavy rain may cause damage.

Extending & Retracting Slide-out Rooms

To Extend or Retract Slide-out Rooms:

- Move the driver seat forward.
- Confirm that there is enough clearance outside the motorhome for the room to extend or retract.
- Ensure the ignition key is in the **OFF** position.
- The park brake must be applied.
- The bay doors must be closed.

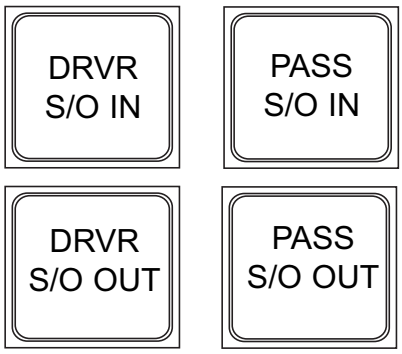

Multi-plex Slide-out Switches 060260c

- Confirm the house batteries are fully charged.
- Ensure all people, pets and objects are clear of the slide-out path.
- Before retracting the slide-out room, start the engine and allow the air bags to fully inflate to normal travel height. Retract the leveling jacks. Ensure there is no dirt or grit on the floor that could result in damage during operation.
- The switch for the slide-out room is located on the overhead compartment above the co-pilot seat.
- Press and hold the slide-out room switch to the desired (**IN** or **OUT**) position. Release the switch to stop room movement.
- Release the slide-out switch when the room is fully extended or retracted (a change in motor sound indicates full extension or retraction). The slide-out drive motor will not stop automatically; the switch must be released.

NOTE:
Perform the slide-out room operation with the air suspension system full. Extensive damage could occur to the slide-out room and awning when extending the slide-out room in snow, sleet, ice or freezing rain. In such conditions, if the slide-out room is extended, clear the awning and ensure free movement prior to operating the slide-out room.

CAUTION:
Dirt and grit trapped under the slide-out room could result in damage to the floor. Continuous operation of the slide-out could cause a drain on the house batteries and damage to the slide-out motor by overheating.

NOTE:
Ensure there is sufficient clearance on the inside of the motorhome (driver seat, etc.) before retracting the slide-out room. If the motorhome has a ceramic tile floor ensure the floor is clean before retracting the slide-out room. Trapped dirt or grit under the slide-out room can scratch the floor surface. Never move the motorhome with the slide-out room extended.

CAUTION:
Rain water can pool on the slide-out awning. The added weight will cause the awning to sag. It will be necessary to retract the room in small increments to allow the water time to run off.

Manual Override

If the slide-out room does not operate a safety feature may be engaged to prevent room operation.

If the slide-out room does not respond from the switch:
- Is the ignition key OFF?
- Is the park brake applied?
- Are the bay doors closed?

If the slide-out room does not operate after checking the safety requirements:
- Ensure all electrical connections at the switch are good.
- Ensure fuse is good.

If the pump motor operates but the room does not move:
- Check the two fuses adjacent to the hydraulic pump. If the fuses test good and the room does not operate, it is possible to manually retract the slide-out. Dual galley slide-outs use different hydraulic components. Several people (as many as eight) are needed to push in the room.
- It may be necessary to contact a repair facility to have the problem diagnosed.

To Move the Slide-out Manually:
1. Access the slide-out room hydraulic pump in the generator compartment at the front of the motorhome.
2. Use the ¼" nut driver on the end of the reservoir cap, to turn the release nuts on the solenoids counterclockwise. Do not exceed 4 ½ revolutions, as damage to the solenoids may result. The room may move slightly when valves are opened and internal pressure is released.

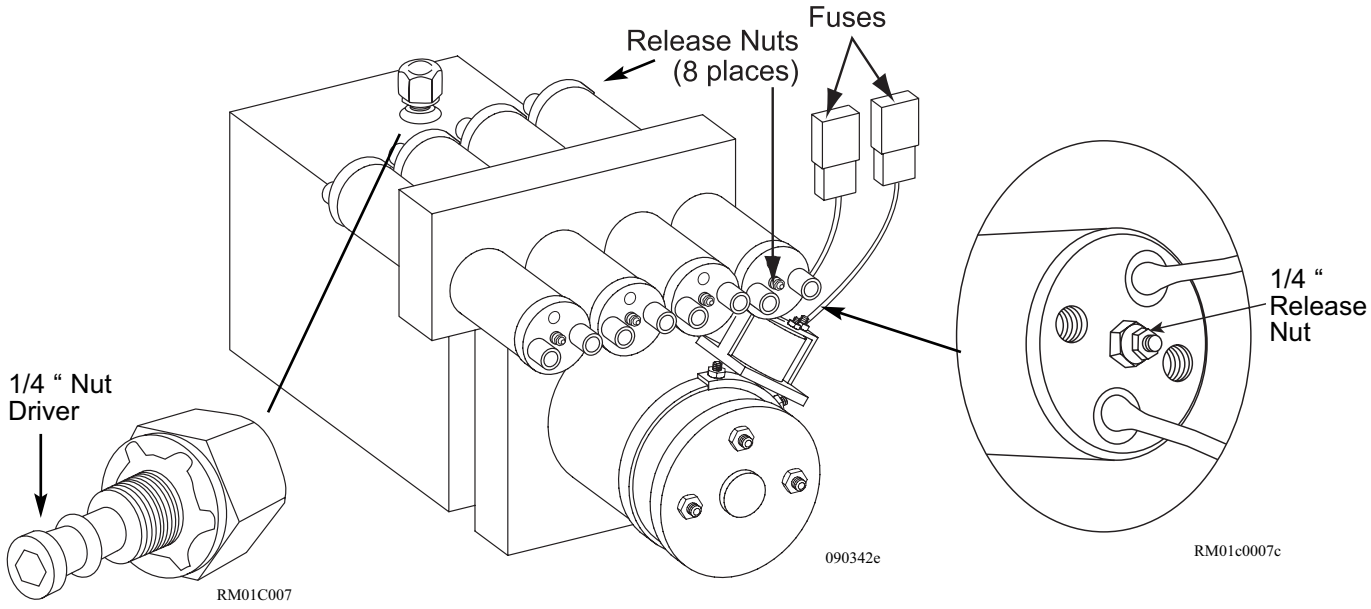

Hydraulic Pump with Three Slides

3. Line up an equal distance along the outside wall. Do not push on the flange.
4. In synchronized movements, push the room in with repeated attempts.
5. Close the release nuts when the room is fully retracted.

NOTE:
The slide-out room is heavy and will require several people to push the room into position. When the slide-out room is in the fully retracted position, tighten the release nuts to hold the room in place. Do not over tighten.

AWNINGS
Four Channel Remote

The four-channel remote can control up to four awnings and is used on the patio awning and the automatic window awnings. Press the round channel selector button at the bottom of the remote to toggle through the different channels. One of the four LED's above the channel selector that corresponds to the appropriate awning will illuminate.

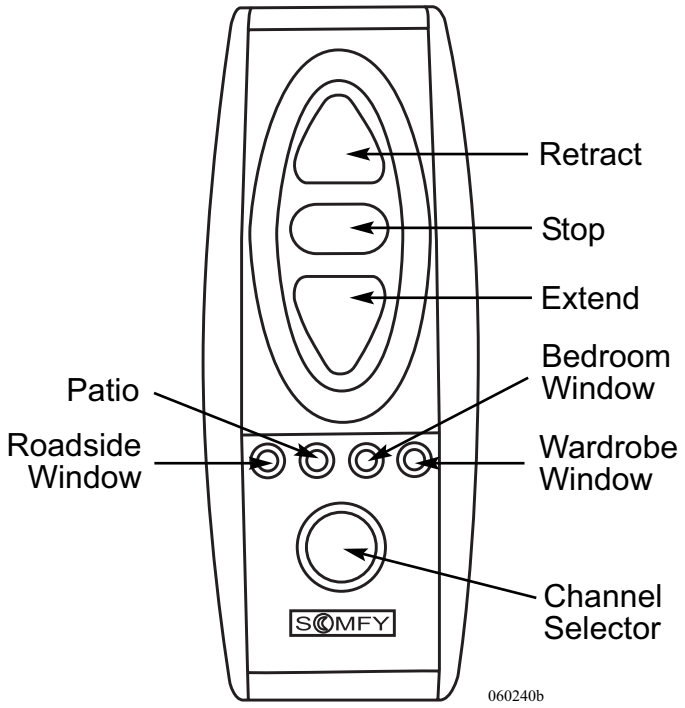

Four Channel Remote

Patio Awning

The Girard Lateral Arm Awning extends and retracts using the four-channel remote. A wind sensor automatically retracts the awning during windy conditions. A manual crank override is provided for emergency retract.

Extending the Awning:

The awning operates from 120 Volts AC. Hook to shore power, start the generator or turn on the inverter. The ignition must be off for the awning to operate. The awning requires 10' of lateral side clearance.

- Select the appropriate channel on the awning remote and press the **Extend** button. The awning will automatically extend full distance. Awning travel can be stopped at any point of travel by pressing the Stop button.

CAUTION:
It is strongly recommended to extend the awning full distance for maximum strength. To prevent damage, retract the awning during gusting winds or inclement weather. Rainwater can quickly collect (pool) on the canvas and overload awning hardware, resulting in damage.

NOTE:
The awning motor is not designed for continuous use. In the event the motor is used to excess, it will automatically shut off and remain inoperative until the circuit breaker inside the motor cools down and automatically resets. Awning run time should not exceed four to five minutes per hour. If the breaker trips, it will automatically reset in 30 minutes to one hour depending on ambient temperature.

After Extending the Awning:

After the awning has fully extended, no further setup or hardware installation is necessary. The motorhome must be hooked to shore power, have the generator running or the inverter turned on for the awning to automatically retract in excess wind.

Retracting the Awning:

- Clear away any leaves, pine needles or other debris by lightly tapping the awning from underneath using a broom handle or other instrument that will not harm the fabric.
- Select the appropriate channel on the awning remote and press the Retract button. The awning will automatically fully retract. Awning travel can be stopped at any point of travel by pressing the Stop button.

NOTE:
If the fabric was wet when the awning was retracted, extend the awning at the soonest opportunity to allow the fabric to thoroughly dry.

Emergency Procedure:

If the awning does not operate:

- Check to make sure the 120 Volt AC is on by hooking to shore power, starting the generator or turning on the inverter.
- Check the circuit breaker in the 120 Volt AC breaker panel located in the bedroom.
- The circuit breaker inside the awning motor may have tripped. Wait 30 minutes to one hour then retry. If the awning still does not respond, the awning can be manually retracted by using the supplied telescoping crank handle.

INFORMATION:
Follow the instructions for manual awning retraction in the equipment manufacturer's manual.

Wind Sensor Adjustment:

A remote mounted wind sensor detects a preset wind speed and retracts the awning in sustained winds of more than a few seconds. The Wind Sensor will override any switch command. The awning will not automatically open when wind speed subsides, but must be opened using the switch. An adjustable potentiometer, located in the awning control box, sets the wind speed necessary to retract the awning. The potentiometer, adjustable between 12 and 31 mph, is preset from the factory at 22 mph. The control box is located in the forward cabinet of the curbside living room overhead.

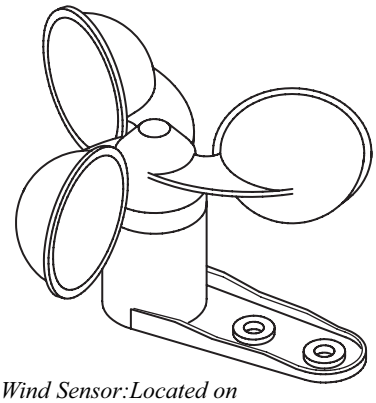

Wind Sensor:Located on the roof of the motorhome. 030929

To Adjust the Sensor:

- Remove control box cover.
- Disconnect or turn off AC power. Turn off the interior house power (12 Volt DC).
- Unscrew the cover plate screws.
- Adjust the potentiometer clockwise to increase the amount of wind speed needed to retract the awning.
- Adjust the potentiometer counterclockwise to decrease the amount of wind speed needed to retract the awning.

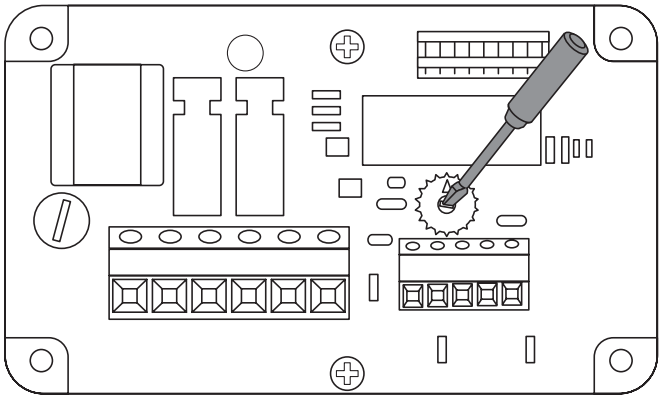

Control Box with Cover Removed 030930

CAUTION:
Setting the potentiometer above 25 mph may void the warranty.

Tips for Awning Use:

- Retract the awning in inclement weather conditions or when leaving the motorhome unattended.
- Avoid leaving the awning partially extended during rainy conditions. The awning is at the strongest setting when fully extended.
- If the wind sensor retracts the awning, leave the awning retracted until winds subside to prevent possible awning damage.
- Awning will not operate with the ignition key in the **On** position.

Window Awning

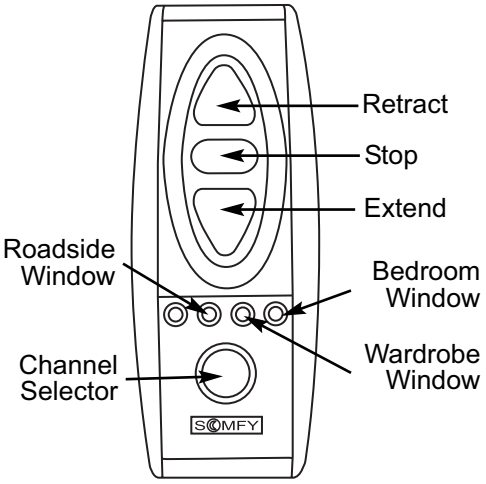

060240b

The window awning uses 120 Volt AC to operate.

To Extend or Retract the Awning:

- Hook to shore power, start the generator or turn on the inverter.
- Select the appropriate channel on the Four-Channel Awning Remote and press the **Extend** or **Retract** button. The awning will automatically extend or retract the full distance. Awning travel can be stopped at any point of travel by pressing the **Stop** button.

CAUTION:
Do not loosen screws on awning arm. Do not push on awning arms to retract awning. Press the center awning rail to retract if a power loss occurs.

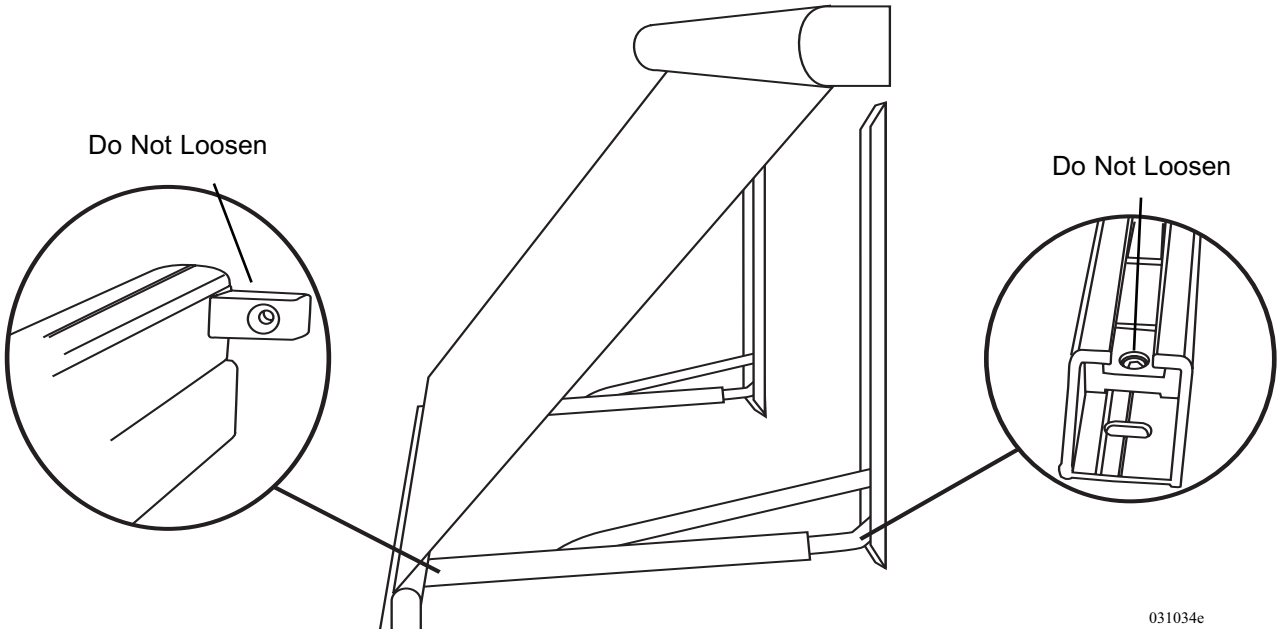

031034e

The door awning uses 120 Volt AC to operate.

To Extend or Retract the Awning:

- Hook to shore power, start the generator or turn on the inverter.
- Press the **Extend** or **Retract** button on the awning control in the cabinet above the passenger seat. The awning will automatically extend or retract the full distance. Awning travel can be stopped at any point of travel by pressing the **Stop** button.

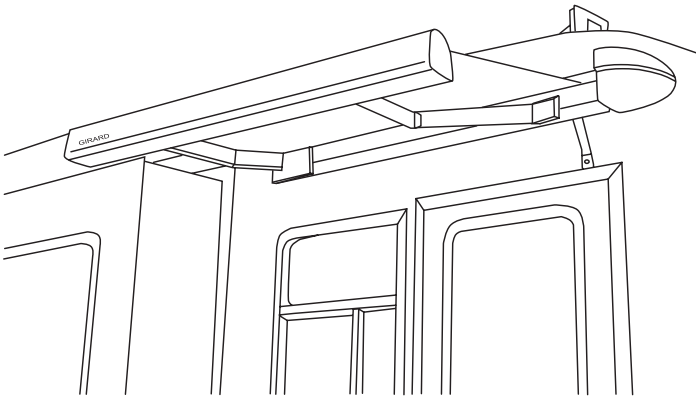

Front Door Awning

031034c

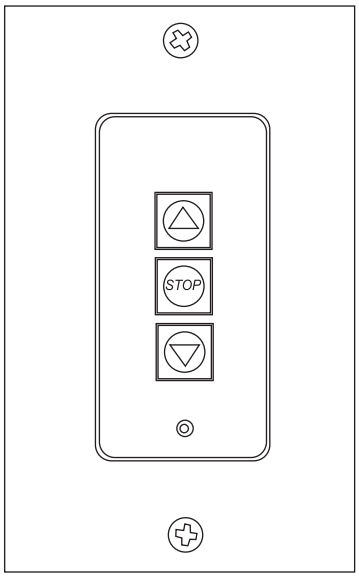

060240d

Door Awning Switch with Face Plate: Remove face plate to replace battery

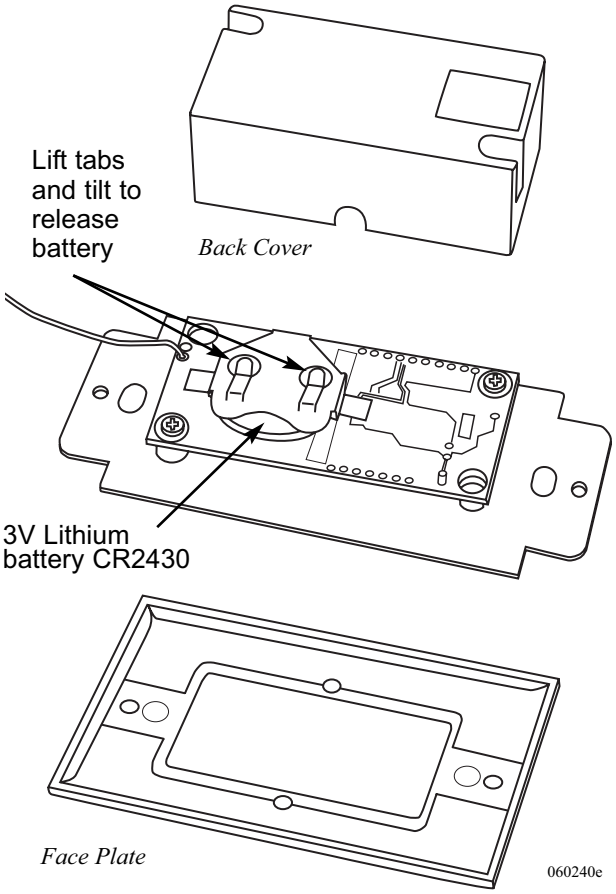

060240e

Remove back to replace battery.

To Replace Front Door Awning Switch Battery:

- Remove switch plate.
- Remove switch unit from cabinet.
- Remove back cover.
- Lift tabs to release battery.
- Replace with new battery and re-install.

Slide-out Cover

The slide-out cover automatically reacts to slide-out direction. A fixed edge of the slide-out cover is installed into an awning rail, mounted just above the slide-out. A spring-loaded roller with special brackets mounts to the slide-out. In a hard rain, the cover helps prevent water from penetrating the seal of the slide-out. The slide-out cover will automatically reach full extension when the slide-out room is fully extended.

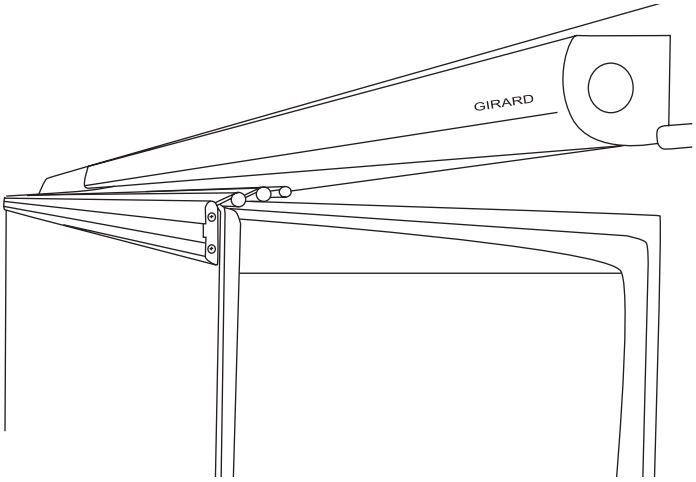

Slide-out Cover Awning 031034b

CAUTION:
At least five feet of clearance is needed between the side of the motorhome and any objects, such as trees or fences, to allow the slide-out room and awning to fully extend.

CAUTION:
The slide-out room and awning should be retracted during heavy wind, rain or snow to prevent damage to the awning or motorhome. Wind can drive rain under the slide-out awning and into the motorhome.

CAUTION:
Rain water can pool on an extended awning cover causing the awning to sag. Retract the room in small increments to allow water to run off.

NOTE:
Upon retracting the slide-out room, material can become caught in between the top of slide room and the opening in the motorhome. To prevent this, stop the room approximately halfway and confirm that the awning is rolling properly before fully retracting the slide-out.

Awning Care & Cleaning

Acrylic Awnings:

Acrylic awning fabric should be cleaned regularly before dirt, leaves and debris are allowed to accumulate, and become embedded in the fabric. Carefully brush off loose debris and hose down the awning. Clean the fabric using a cloth and mild soap such as FeronCLEAN®. A high-quality acrylic fabric cleaner may also be used to help maintain the appearance. Carefully follow the instructions as listed. Do not use detergents. Metal surfaces should be cleaned with soapy water and thoroughly rinsed. Allow the awning to thoroughly air dry while extended.

Care Facts and Tips:

- The awning is at the strongest setting when fully extended. Avoid leaving the awning extended in inclement weather. Retract the awning during rainy conditions. Water weighs 8.33 lbs. per gallon and can quickly collect on the canvas. Excess water collection can overstress and damage awning hardware.
- Remove leaves, pine needles or other debris by tapping the canvas from underneath using a broom handle or other instrument that will not harm the fabric.
- If the Wind Sensor retracts the awning, it is recommended the awning remain retracted until winds subside.
- The ignition key must be in the OFF position for the awning to operate.
- The motor draws approximately 300 watts (about three amps) of power while in use.
- Allow the awning fabric to thoroughly dry before retracting the awning. Should the awning need to be retracted while the fabric is wet, extended it as soon as possible to allow it to completely dry.

FANS
Exhaust Fan

A wall thermostat controls the galley exhaust fan using House 12 Volt DC to operate.

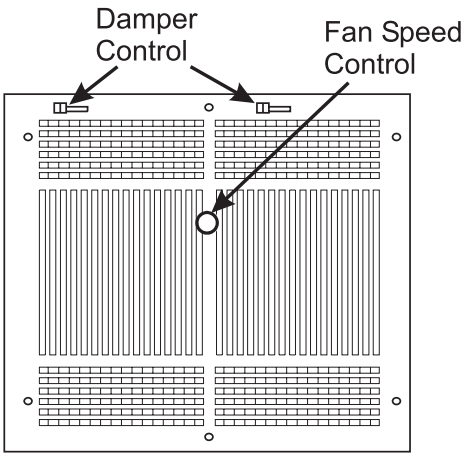

030762

To Operate the Fan:

- Remove the ceiling grill cover.
- Open the grill damper.
- Select one of three fan speeds using the round knob on the grill.
- Set the thermostat to **ON** for continuous airflow or set the thermostat to **AUTO** and set the desired air temperature for thermostatically controlled airflow.
- To stop the fan, set the thermostat to **OFF**. Close the grill damper and install the ceiling grill cover.

NOTE:
Close the grill damper before installing the grill cover. Failure to close the damper may result in the cover blowing off while the motorhome is in motion.

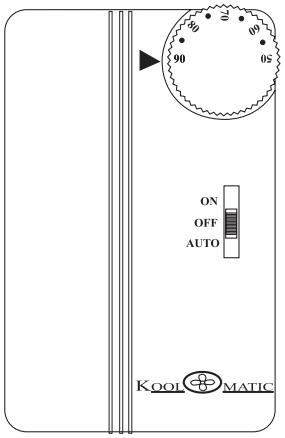

030771

Bathroom Fan

The bathroom fan has three speeds with a **0** (Off) position. A built in thermostat has an operating range of 22º F to 123º F, based on inside ambient air temperature. The dark blue zone on the thermostat is cool; the dark red zone indicates heat. The fan starts automatically when the lid opens approximately two inches during normal operation.

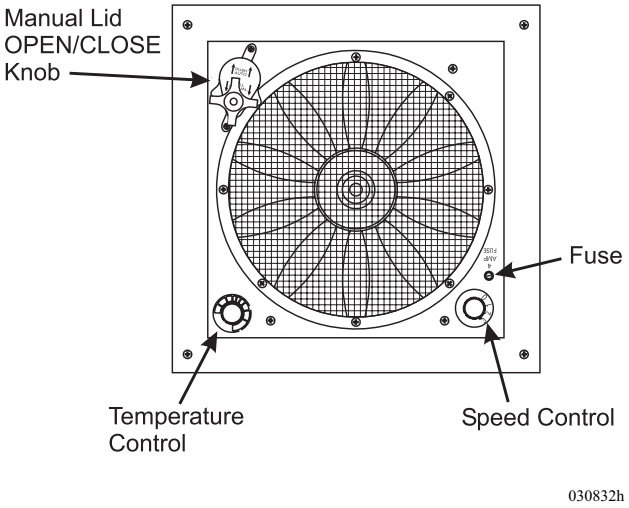

Automatic Operation:

Leave fan in **AUTO** position for normal operation. Turn **FAN** switch **ON** at sink cabinet; the lid will open and the fan will start. The **AUTO** mode will not operate with the fan speed switch in the **0** position. Turn **FAN** switch to **OFF** position to lower vent lid and stop fan.

Manual Operation:

To adjust vent lid to different opening positions pull **DOWN** on the manual lid knob, turn knob counter-clockwise to lower the lid. Return fan to **AUTO** position by pushing **IN** on the knob.

NOTE:
The fan cover will not operate in the AUTO position if the speed switch is set on "0."

CAUTION:
It is recommended to travel with the vents closed. High winds and vibration can damage the Plexiglass® dome.

Tips for Fan Operation:

- To keep condensation from accumulating, operate the fans. Condensation occurs naturally from fluctuations in interior and exterior temperatures, humidity and dew point changes, steam from cooking or boiling large amounts of water on the cooktop. Shower use is another source of condensation.
- If the fan fails to operate, check for a blown fuse either in the domestic fuse panel or the 4 Amp fuse on the fan.
- To remove the screen, loosen the eight screws holding the screen in place. Use a non-abrasive soap and water to clean and reinstall.
- Slightly open windows on the shaded side of the motorhome to create the most airflow, especially on hot, sunny days. Direct airflow by slightly opening selected windows. Maximum airflow is achieved between an open window and the Fantastic Vent.

NOTE:
Do not leave the fan switch in the active mode while the motorhome is stored or unattended for extended periods. High winds, unusual conditions or obstructions may prevent the fan cover from fully closing, resulting in leakage and serious damage.

BLINDS - COCKPIT (Optional)

The cockpit blinds are 12 Volt DC operating from the house batteries. One blind assembly is used for each window located in the cockpit area.

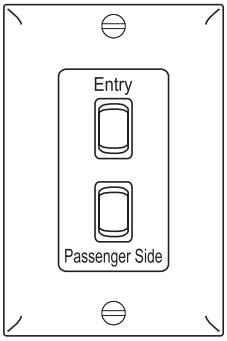

060180

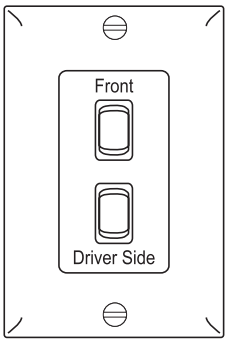

060179

To Operate the Blind:
- The interior house power must be on.
- Push the switch down to lower the desired blind.
- Push the switch up to raise any blind.

NOTE:
Do not attempt to move or drive the motorhome with any blind in the lowered position.

POWER SHADES (Optional)

Power shades are located in the living and dining room areas. The power shades use 12 Volt DC interior house power for operation. A three-position switch used to operate each blind is generally located under the overhead cabinet.

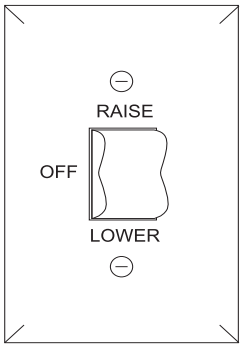

031011

- Press **LOWER**: The blinds will lower full distance then open.
- Press **RAISE**: The blind will close then raise.
- The blind can be stopped at any position by placing the switch to **OFF**.

NOTE:
The blind will stop automatically after it has traveled full distance. It is not necessary to place the switch in the OFF position.

POWER SUNVISOR

The windshield visors are 12 Volt DC operating from the house batteries. One visor assembly is used for the driver and another for the passenger.

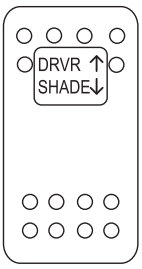

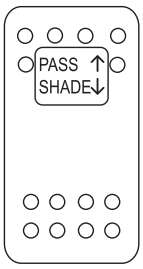

080306

To Operate the Visors:
- Use the house battery cut-off switch to turn on the interior house power.
- Push the switch down to lower the desired Sunvisor.
- Push the switch up to raise the Sunvisor.

NOTE:
Do not attempt to move or drive the motorhome with any window view obstructed.

DOOR - SLIDING

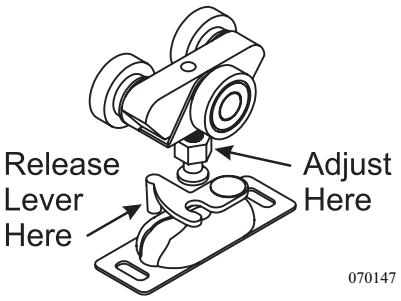

The sliding pocket door uses two rollers at the top of each door. During the life of the motorhome the sliding door may need adjusting to close tight against the wall. Locate the small wrench and turn the adjusting screw upward or downward.

If, for any reason, the pocket door needs to be removed, locate the portion that is secured to the top of the pocket door and rotate the small lever outward to release the latches.

LUBE:
The pocket door rollers should be lubed with just a small drop of oil once a year to help increase the life of the rollers and improve the sliding of the door.

PRIVACY DRAPERY ELECTRIC (Optional)

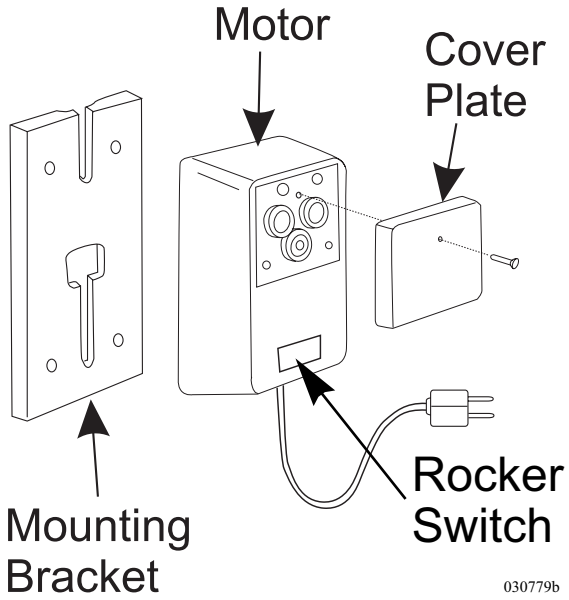

- The receptacle is powered by shore power, the generator or the inverter.
- Press and hold the rocker switch to open or close the drapes. Release the switch to stop movement.
- Release the switch when the drapes are at the end of travel.

Internal Thermoswitch Shut-Off:

The drapery motor is designed for normal use. If run excessively, such as every few minutes, the internal thermoswitch shuts off the motor for several minutes. The thermoswitch prolongs the motor life and prevents inadvertent or accidental abuse of the mechanism.

NOTE:
If the cord stretches after use, adjust the tension by moving the motor on the wall bracket.

Replacing the Driver Tire:

- Turn off all power and unplug the receptacle.
- Remove the screws holding the cover.
- Roll the tire manually and divert the drapery cord out of the mechanism.
- Cut the old tire off using care not to cut the plastic drive roller.
- Wipe the roller with a dry cloth to remove dirt or residue. Snap the new drive tire in place.
- Adjust the motor on the wall bracket to get the drapery cord back into position, if necessary.

The Pilot and Co-Pilot seats are adjustable to provide maximum comfort. Seats must be locked in the forward facing direction while traveling.

NOTE:
The seats operate from 12 Volt DC house power. The ignition must be on to operate the lumbar/seat support and heater functions.

Memory Control

To Program a Seat Position:

- Position seat as desired using the Power Base Control. Press the SET button once, then select the number 1 or 2 Memory Button. The selected Memory Button will illuminate. When the seat position is memorized the light will turn off.

To Move Seat to a Stored Position:

- Press the desired Memory Button once, the light will illuminate until the seat reaches its programmed position.

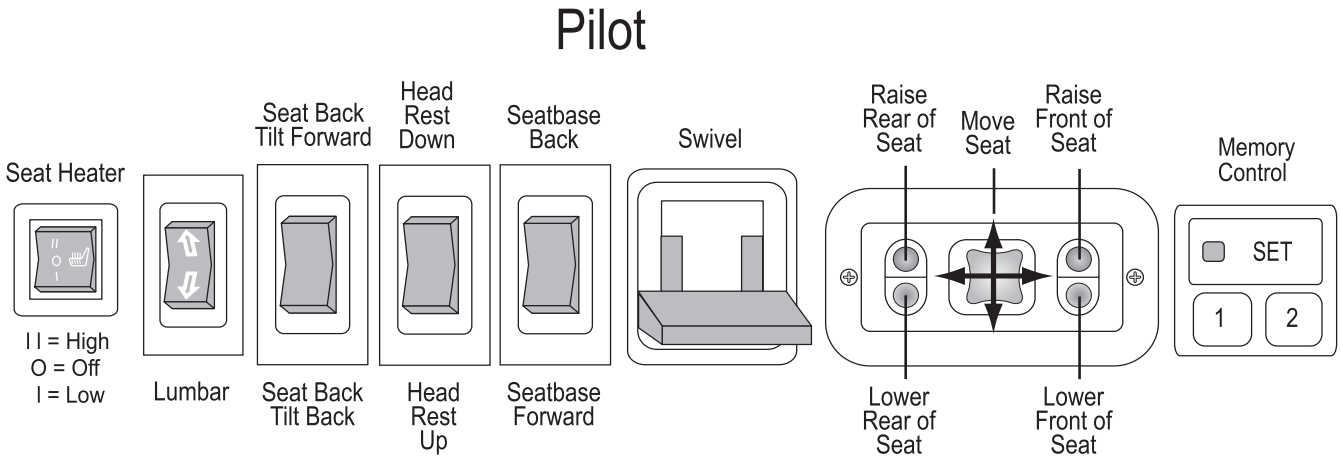

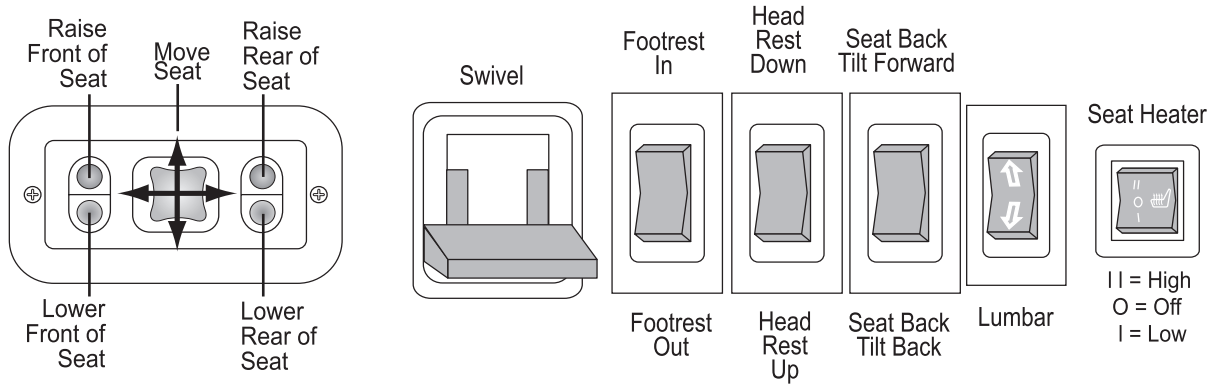

Swivel Seats

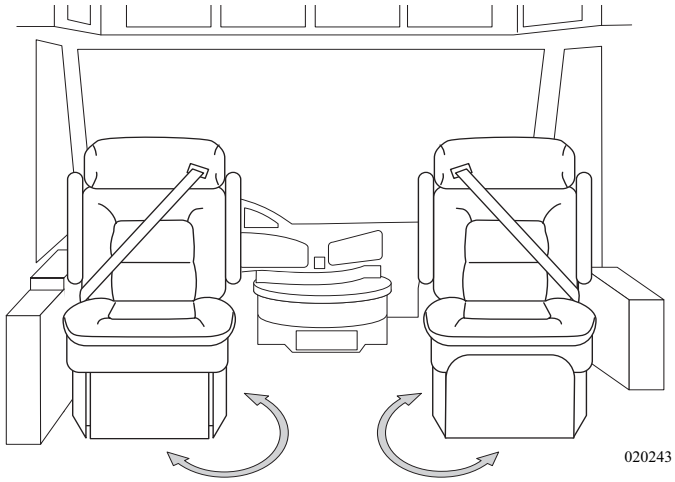

Swivel Seat Operation:

- When swiveling a seat, lift up the swivel lever and rotate to the desired position.
- The passenger seat swivels all the way around when the Slide-out is extended.
- When rotating the driver seat, put the steering wheel in the upright position.
- Move the seat forward, then pull the swivel lever up and rotate to the desired position.

WARNING:
Seats must be locked in the forward facing position while the motorhome in transit.

NOTE:
After either seat is rotated 180°, it must be rotated back in the opposite direction rotation originated from. The 12 Volt wiring in the seat may disconnect if rotated 360°.

SOFA BED CONVERSION

The sofa will convert easily into a bed. The sofa comes equipped with safety belts and these should be used if occupied during travel.

Sofa to Sleeper:

- Lift up from the center of sofa, just below the seat cushions, to form a “V” shape with the seat base and back rest.
- Push down on seat base, then pull out until the seat base and backrest are flat.
- Fold seat belts out of the way.

Sleeper to Sofa:

- Lift up the seat base and pull up the backrest until they are in a “V” position.
- Push down on seat base.

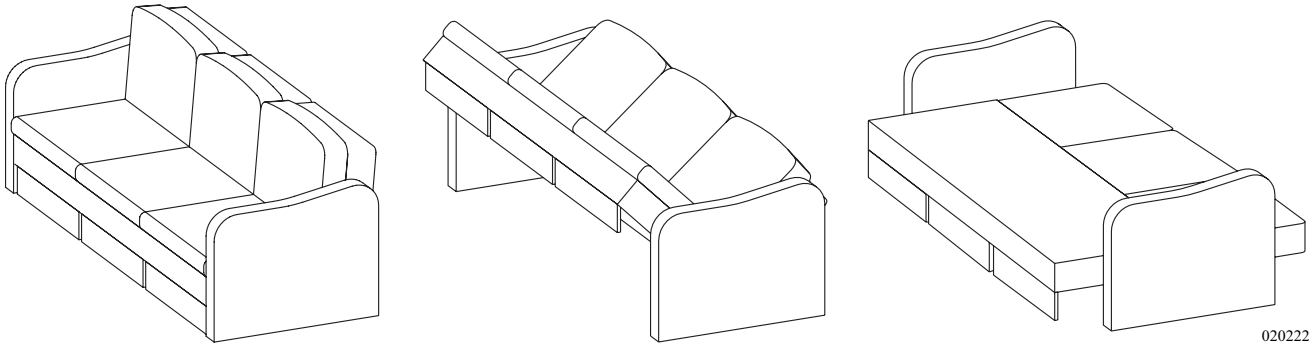

DINETTE BED CONVERSION (Optional)

To Convert Booth Dinette into a Bed:

- Lift seat cushions to an angled vertical position.
- With a firm grip, lift front edge of the table approximately six inches and push table leg lock to side.
- Swing the table leg up and lock into a horizontal position.
- Continue lifting table until table stays are clear of retainers. Pull outward and lower table down.
- Use both seat cushions and one back cushion for a mattress. Leave one back cushion in a vertical position.

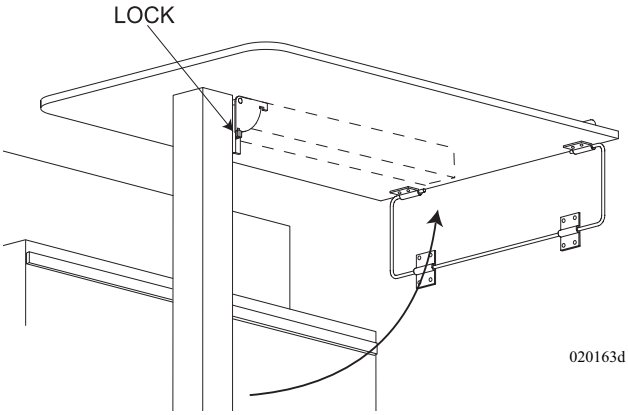

WARNING:
Do not occupy the booth dinette, if not equipped with safety belts, or the dining chairs while the motorhome is in motion. Chairs must be stored in an enclosed area or secured with tie down straps while the motorhome is in motion to avoid personal injury to occupants in case of a crash or sudden stop.

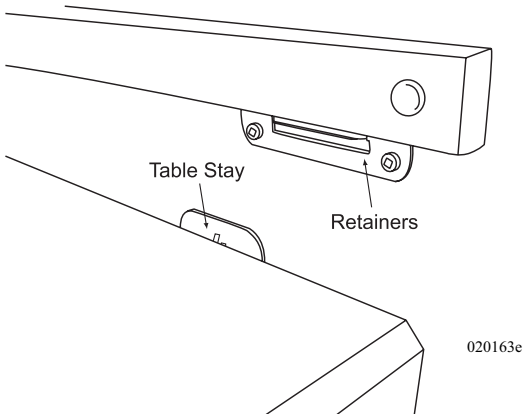

AIR MATTRESS BED

The air mattress pump is located in the bed storage compartment and is plugged into a 120 Volt AC outlet. **Two remotes are used to adjust the firmness setting of each side of the mattress.** Only one side of the mattress may be adjusted at a time. **When one remote is being used, the other remote is inoperative.**

To Operate Mattress:

There are two modes that can be used to adjust the mattress firmness: Manual **(1)** mode and the Pressure Sensitive **(2)** mode. The air mattress reads body weight to make proper adjustments and requires someone to be on the mattress when adjusting firmness settings in both the Manual and Pressure Sensitive modes.

To Select Modes:

Hold the **MODE** button down until the remote beeps, then release. The display will read 1. Use the + and - buttons to alternate between Manual and Pressure Sensitive modes. To enter the mode that is selected (1 or 2) hold down the **MODE** button again until the remote beeps. To return to mode select, at any time, press and hold the **MODE** button down until the remote beeps.

When in Manual Mode (1):

Press and hold the + button to increase mattress firmness or press and hold the - button to reduce mattress firmness. After adjusting the mattress the current firmness will be displayed on the remote for a few seconds.

When in Pressure Sensitive Mode (2):

The firmness setting will show on the display and can be adjusted in 1% increments by pressing the + and - buttons.

To Store a Firmness Setting:

After adjusting the mattress firmness in either the Manual **(1)** or Pressure Sensitive **(2)** mode press and hold the blue **MEMORY** button until the remote beeps. The firmness setting is stored. The firmness can be adjusted and then returned to the stored setting by pressing the **MEMORY** button. Holding the **MEMORY** button down until it beeps will change the stored position to the current mattress firmness.

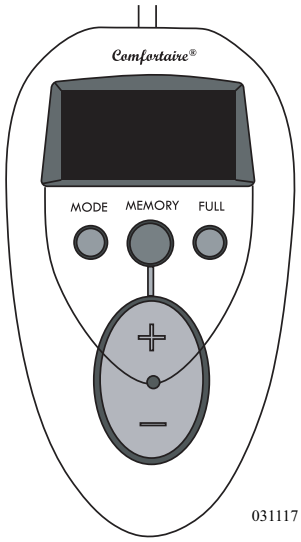

Air Mattress Remote on Nightstand

NOTE:
This system is designed to use the back pressure of a person's weight. Changes to firmness should be made while lying on the mattress.

Instant Fill Feature:

The instant fill feature works in either the **MANUAL** or the **PRESSURE SENSITIVE** mode. Press the **FULL** button on the remote and the mattress will inflate to 100% capacity. The instant fill works with or without someone on the mattress.

Cleaning and Maintenance:

- Check air filter at back of pump monthly. Rinse with water to clean and let dry before installing.
- Over time normal settling and impressions in cover will occur. Only the cover quilting is affected. Steam clean only, allow mattress cover to dry thoroughly. Do not dry clean.

Troubleshooting

Slow Leak: Check fittings on front of pump and connections to mattress. If leaks from hose at outlet side of pump remove clamp, cut hose 1" and re-install hose and hose clamp.

If problem continues, cut hose from air pump nozzle and install hose plugs, located in the mattress cover, and install in hose ends. If air holds in the mattress the problem is in the pump. If air doesn't hold then it is the mattress. Call Comfortaire at **1-800-759-0594**.

Pump Will Not Operate:

- For pump to operate the motorhome will need to be plugged in, the generator running, or the inverter will need to be turned on. Ensure pump in bed storage compartment is plugged in.
- Check fuse on pump. Use a key or a small screwdriver to open fuse compartment. The back fuse is the fuse used. When the fuse holder is pushed in, the fuse is installed. If fuse is bad replace with spare in holder.
- If motorhome has power but the remote does not display, check phone line connections at remotes and at pump.

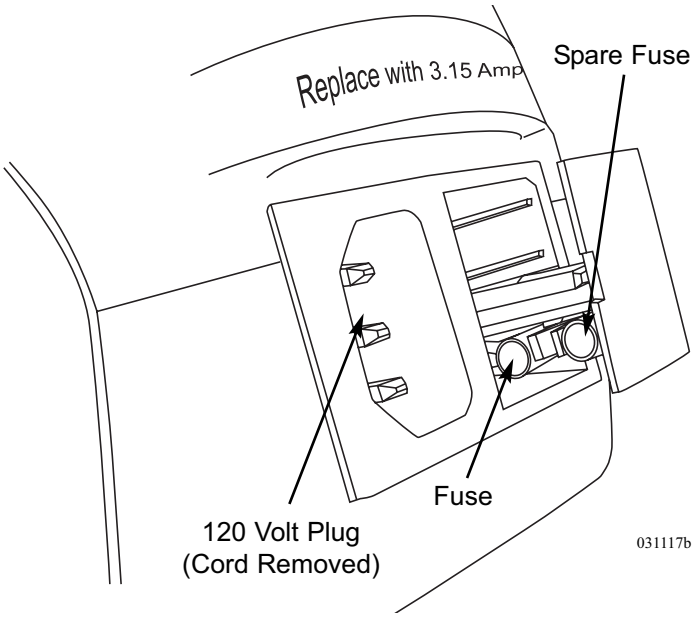

Changing Fuse on Air Pump located in Bed Storage Compartment

Pump Operates but Pressure Does Not Change:
Check for kinks in hose or any visible obstructions between pump and mattress.

NOTE:
Do not disassemble pump. Internal components can be damaged and warranty will be voided.

STORAGE - UNDER BED

To use the storage compartment located under the bed, locate and unlock the bed deck latches. Lift up the bed by the front edge of the mattress platform. Gas struts hold the mattress and platform open.

NOTE:
Do not over stress gas struts by rapidly opening or closing the bed access cover, as this action can damage the struts or mounts. In extreme cold gas struts may not hold the mattress platform in the open position.

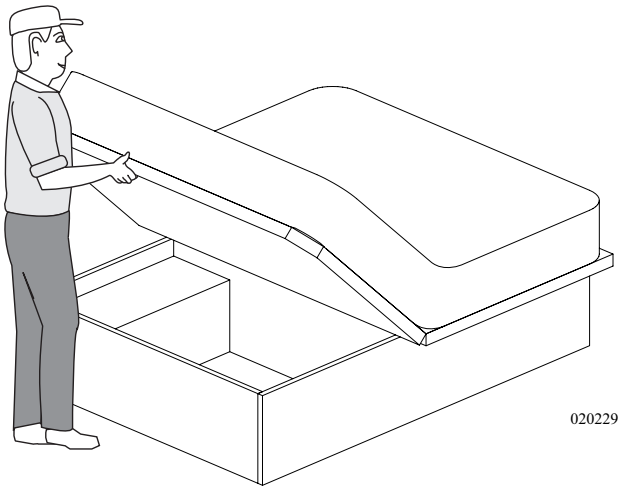

SUPER SLIDE (Optional)

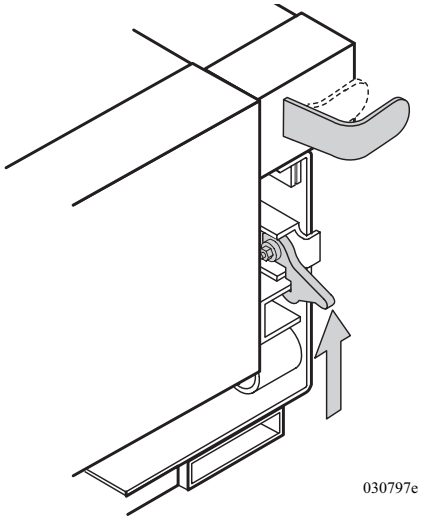

The Kwikee Super Slide is an option that is available for use in the storage compartment bays of the motorhome. The super slide allows for the pay load to slide outward for easier access.

- The motorhome must be level before opening.
- There are two latch releases: lift and hold up to release one, pull outward while pulling on the super slide to release the other.
- Maximum weight capacity is 1,000 lbs. Never exceed this amount.

WARNING:
The motorhome must be level when sliding the drawer out of the bay compartment. The drawer can slide out abruptly and cause bodily harm when the motorhome is not level.

POWER SUPER SLIDE (Optional)

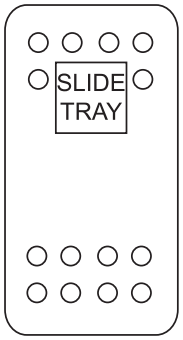

Power Slide Switch located in curbside storage bay.

The power storage tray (in full pass through bays only) can be operated from the momentary switch located in the curb side bay, the Power Slide remote or the manual override if power is lost. Safety cut out switches on the roadside and curbside prevent tray operation when the cargo bay doors are closed.

Using the Switch:
- Open curbside bay door. Switch will work tray both directions. Press and hold switch to move tray. When switch is released the tray will stop.

Using the Remote:
- Press the left or right arrows adjacent to the tray number to be moved to slide tray out.
- To stow tray press the stow button (1 or 2).
- If the tray is out on the roadside and the curbside button (right arrow) is pressed the tray will return to the stow position.
- While tray is sliding out press the opposite arrow button to stop tray operation.

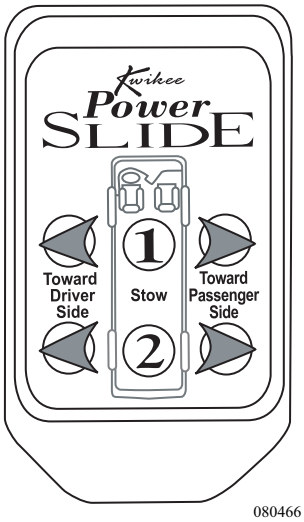

Powerslide Remote

Troubleshooting:

- Power comes from a 40 Amp mini-breaker in the Rear Run Box labeled Bay Slide.
- Ensure the House Battery Disconnect in the battery compartment is **ON**.
- Ensure interior house power is **ON**.
- Check safety switch on hinged side of cargo door opening to see if it is out of adjustment. With the door open the switch should provide a ground through the metal contacts on the back of the switch.

NOTE:
Maximum weight capacity is 800 lbs. Never exceed this amount.

Manual Override:

If battery power is lost or if there is an electrical problem, the tray can be moved in manually. Lift the manual release lever on the power module. Push tray in and return arm to lock position.

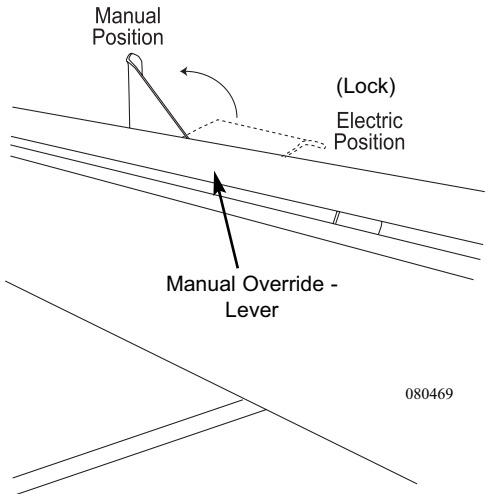

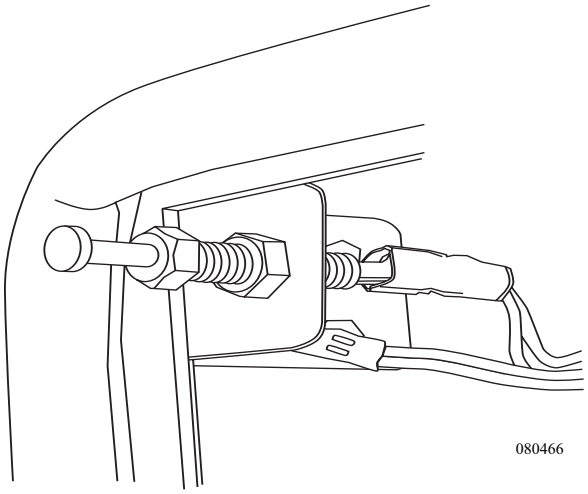

Powerslide safety switch

LADDER - REAR

The rear ladder allows access to the roof. Care should be used when climbing the ladder. Access to the roof should be limited to cleaning and sealing purposes only. Stow the lower portion of the ladder in the cargo bay during travel.

NOTE:
Maximum weight capacity for the ladder is 300 lbs.

CITIZEN BAND (CB) RADIO

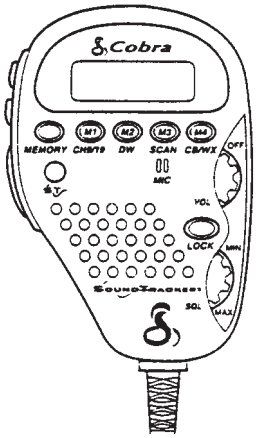

030783

The CB radio is a low-powered transmitting device used for two-way, short-distance communications. The CB can be a very useful tool for emergency weather condition information and potential road hazards reported by other CB operators.

Handset:

- Volume/On/Off control has no effect on radio transmission.
- Squelch control is first turned up to a point where static or background noise can be heard then reduced to a point where the static disappears.
- The Channel Selector is used to select channels (1-40) by pressing the Channel Up/Down Tuning buttons.
- When the Microphone button is pressed, the CB radio switches from a listening device to a transmitter. Anything spoken into the microphone is transmitted over the airway of the channel selected. Press the button to talk and release the button to receive a reply.

Emergency Communication:

- Set the CB radio to Channel 9.
- Request a React base (if available) to respond by saying "Break Channel 9 for a React base" and provide the CB Distress Data (called "CLIP") repeatedly so the nearest monitor may be of assistance:

Call Sign - Identify yourself and vehicle.
Location **-** Be exact.
Injuries - How many? What type? Are persons trapped?
Problem **-** Give details and be specific about the assistance needed.

NOTE:
Channel 9 is for emergency use only.

Following rules of use:

Limit communication to five minutes at a time. Give others a chance to use the channel. Do not use illegally amplified transmitter power or illegally high antennas or promote illegal activities. Do not transmit profanity or music over the airway. Do not use the CB to sell merchandise or a professional service.

Troubleshooting:

- Limited Range: Weather conditions, environment, terrain, trees, other vehicles, and/or the power of the radio and its antenna, and matching of the Standing Wave Ratio (SWR) setting affect CB radio range. See OEM (Original Equipment Manufacturer) manual to adjust SWR.
- No Power: Check 3 Amp fuse in Front Run Box.

CELL PHONE ANTENNA

The motorhome is equipped with a cell phone antenna. The antenna lead is located behind the dash instrument cluster. To access the lead, remove the inspection panel located on top of the dash pad. The antenna lead run is installed in the section between the drivers side window and the windshield. The coiled antenna lead should be located toward the front firewall, directly behind the instrument cluster.

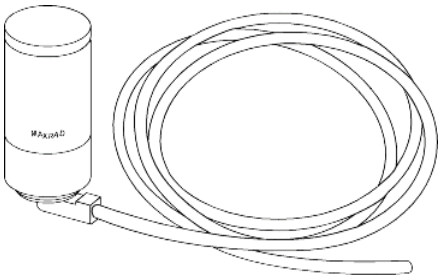

Cell Phone Antenna 030866

RECEIVER-MONITOR

This system uses an in-dash, 7" color video monitor and a XM® Satellite Radio Ready AM/FM receiver. The 7" video monitor will display the radio and navigation system information.

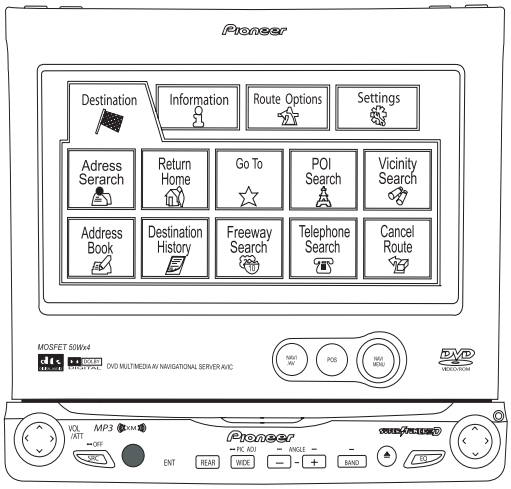

031050c

NOTE:
The radio systems operate with the radio remote control or from the radio touch screen.

Power Requirements:
- Main house battery disconnect switch (located in the battery compartment) must be on.
- Use the battery cut-off switch to activate the interior 12 Volt power.

Monitor Operation:
- Press the **OPEN/CLOSE** button on radio face to open and close monitor. The monitor will automatically turn on.
- The monitor is a touch screen. Experience and the operations manual are the best teachers in learning how to operate this system.
- **SOURCE** button selects **AM/FM** Radio, **XM** satellite radio or **M-CD** for DVD and CD play.

INFORMATION:
For more detailed instructions on the monitor or receiver refer to the monitor-receiver instruction manual.

To Play a CD or DVD:
- Turn on the monitor and insert a disc. Select Play on the touch screen.
- Adjust volume with knob on left of radio.

GPS Navigation

The GPS Mobile Navigation system uses 2-D and 3-D map views, provides instant re-routing and voice prompted turn-by-turn instructions. The system is a GPS antenna, a DVD ROM player and a touch screen monitor. A single DVD provides maps for the entire continental US and Canada.

INFORMATION:
Complete information and instructions are found in the OEM instruction manual.

Perform following instruction only when the motorhome is PARKED:

- Insert the map disk in the navigation CD unit.
- Press the **Navi/AV** button to select the Navigation Menu.
- Select an item of interest from the Main Menu.

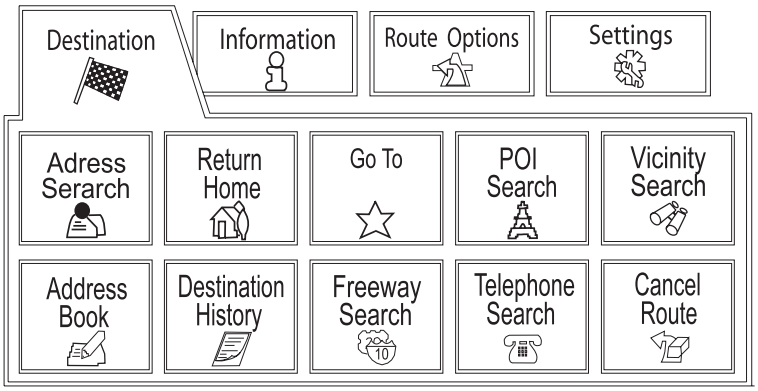

Navigation Main Menu 031050d

ALADDIN™ SYSTEM

The Aladdin™ system is designed to provide the operator with up-to-date chassis and house system information. Aladdin™ automatically selects one of several cameras used to aid the driver during travel. For example, when the system is turned ON, placing the transmission in reverse will select the backup camera. Activating a turn signal will select the corresponding side view camera.

Joystick Module:

The Joystick Module is the operator interface to the Aladdin™ system through the monitor display. Multiple joystick modules may be attached to the Aladdin™ . Each joystick module allows the operator to control cursor movement. Joystick movement will be audible with a program sound which can be selected in the Time & Alarm Function sub-menu. Pushing the joystick to the right typically enters a menu item; pushing the joystick left typically takes the operator back to the previous menu. Likewise, pushing the joystick up or down enables the operator to scroll through and change information. An illuminated LED indicates that the system is on. When the joystick is moved, the LED turns off briefly ("blinks"), indicating that the joystick command has been transferred to the Aladdin™ controller module. During normal operation, the LED also blinks approximately every four seconds.

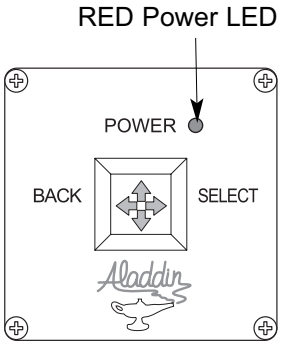

Aladdin Joystick 080377d

The Aladdin™ is turned on either with the motorhome ignition switch or the joystick. The Aladdin™ will power down when ignition is turned off, unless the operator selects the Aladdin™ to remain on.

```
MAIN MENU

> CAMERA SELECT
  ENGINE/TRANS STATUS
  COACH ELECTRICAL STATUS
  COACH TANK/MISC STATUS
  TRIP METER SELECTION
  TIME/ALARM FUNCTIONS
  SYSTEM OPTIONS
  POWER DOWN ALADDIN
```

Main Menu:

When the Aladdin™ is powered up, the main menu appears. The operator can choose any item by pressing the joystick up or down. An arrow indicates the current menu item. Pressing the joystick right will select that menu item. Pressing the joystick left goes to the previous screen.

Camera Select:

The Aladdin™ operator can manually select one of the four video cameras that are attached to the Aladdin™. When the sub menu item is first selected after initial power-up, the Aladdin™ will display the video from each camera sequentially, changing camera view once every six seconds. A specific camera can be manually selected by moving the joystick up or down.

NOTE:
The backup camera is automatically selected when the transmission is placed in reverse and the side cameras are activated by the turn signals. If both turn signals are active (hazard lights) then the backup camera will be selected.

If a turn signal is activated while in reverse, the side camera will override the backup camera.

```
STATUS

ENGINE            TRANS
X MPH             X GEAR SETS
X RPM             XX GEAR ATT
X F TEMP          XXX F TEMP
X PCT LOAD
X PSI OIL         BATTERY
X MPG             XXX VDC
X CRUISE OFF      08:27 AM
E HEADING
```

Engine/Trans Status:

Provides the operator with a single screen display of current available engine and transmission data. Compass heading and time are displayed on each screen.

If the operator moves the joystick right in this screen, an enlarged engine and transmission screen will display, showing only four parameters at a time, with five screens available. The screens are automatically scanned approximately every six seconds.

Move the joystick up or down to manually scan through the screens and disable automatic scanning. Move the joystick right to resume automatic scanning. Moving the joystick left to return to the previous all-in-one screen. A left/back from this original status screen will return the operator to the main menu.

```
XX HEADING                hh:mm XM

ROAD SPEED                XXXX MPH
CRUISE INACTIVE           XXXX MPH
TRANS GEAR SELECTED            X
TRANS GEAR ATTAINED           XX
```

020197F

Coach Electrical Status:

The **COACH ELECTRICAL STATUS** screen will provide the operator with a display of AC Leg 1 and Leg 2 Volts, Amps and Frequency, House Battery Volts and Amps, and Solar Panel Voltage and Amps.

COACH ELECTRICAL STATUS

	VAC	AMP	FRQ
AC LEG1	117	18.4	61
AC LEG2	119	11.0	60

	VDC	AMP
SOLAR	13.9	1.0 CHG
HOUSE BAT	13.5	20 CHG

Coach Tank/Mis Status:

The **COACH TANK/MISC STATUS** screen reads fresh, grey and black tank percentage full and corresponding gallons, LP-Gas tank percentage full. Basement and outside temperatures as well as compass heading will be displayed.

COACH TANK/MISC STATUS

	PCT	GAL
FRESH TANK	0	0
GREY TANK	0	0
BLACK TANK	0	0
LP TANK	0	0
BASEMENT TEMP	63.1 F	
OUTSIDE TEMP	55.7 F	
COMP HEADING	E	

Time Alarm Function:

View Current Time screen is a large display of information entered in the **SET DATE AND TIME** screen. There are no changes which can be made to this screen.

SET DATE AND TIME screen allows setting the current time and date. Go to **TIME/ALARM FUNCTION** from the Main Menu and select **SET DATE AND TIME**. Joystick left or right selects the various digits. Joystick Up and Down changes the value.

SET DATE AND TIME

hh:mm:ss AM MM/DD/YY
^

DAY OF THE WEEK: MON

020209

Trip Meter Selection:

This submenu selects a numbered trip, trip leg statistics or trip fuel statistics. Additionally, this submenu displays engine totals as reported from the ECM (Engine Control Module), including total engine hours, miles and fuel usage.

TRIP METER SELECTION

> NUMBERED TRIP SELECT
TRIP LEG STATISTICS
TRIP FUEL STATISTICS

ENGINE TOTALS

TOTAL HOURS XXXXXX
TOTAL MILES XXXXXX
TOTAL FUEL GAL XXXXXX

020199C

Power Down Aladdin:

Select **POWER DOWN ALADDIN** to enter Low Power mode, and turn off sensor modules. Low Power mode is cancelled when any joystick module is touched.

Turning off the ignition will cause the Aladdin™ to power down. A ten-second countdown is performed prior to power down. Joystick action will abort this countdown and the Aladdin™ will remain on. The Aladdin™ can be manually powered down when desired by selecting the **POWER DOWN ALADDIN**. If the joystick is not touched before the countdown, and the Aladdin™ has powered down, the joystick touch will cause the Aladdin™ to power back up.

IGNITION OFF:

SHUTTING DOWN IN

10 SECONDS

020218d

System Options

```
SYSTEM OPTIONS

ALADDIN MODEL 4XX - 05      3.02
JOYSTICK F/W VERSION        2.01
SCREEN COLOR:               01
TEXT COLOR:                 16
SENSOR MODE:            NORMAL
SYSTEM SETUP
COMPASS CALIBRATION
```

The **SYSTEM OPTIONS** screen provides the operator with a submenu for Aladdin™ functions that are less frequently used, and includes screen appearance adjust. Only service personnel should use **SYSTEM SETUP** to program a new system. To assist the service technician in troubleshooting system problems, the **SENSOR MODE** may be used.

Screen and text colors are selected by accessing the menu item using joystick up and down. Move the joystick right to sequence through the seven available colors. Colors selected will be immediately displayed. Colors selected will be stored and remain in effect until changed, even if the Aladdin™ is powered down.

The usual **SENSOR MODE** is **NORMAL**. Additional options are **RAW** and **VERSION**. **RAW** mode causes the sensor modules to display raw, unmodified/calibrated data from their sensors, and might be used by technicians troubleshooting the system. **VERSION** mode causes the sensor modules to display internal software version numbers. Compass calibration is used to match the compass module to the motorhome, and may be performed as needed.

Compass Calibration

```
COMPASS CALIBRATION

> DECLINATION  +xx DEG
  START CALIBRATION

  START CALIBRATION AND THEN
  DRIVE COACH IN ONE OR MORE
  COMPLETE CIRCLES TO ENSURE
  COMPASS ACCURACY.  SELECT
  STOP CALIBRATION TO END.
```

The **COMPASS CALIBRATION** system allows the owner to match the motorhome to the Temperature and Compass Module. The compass will compensate for the metal construction within the motorhome and increase accuracy. Entering a declination will allow for true North or magnetic North headings.

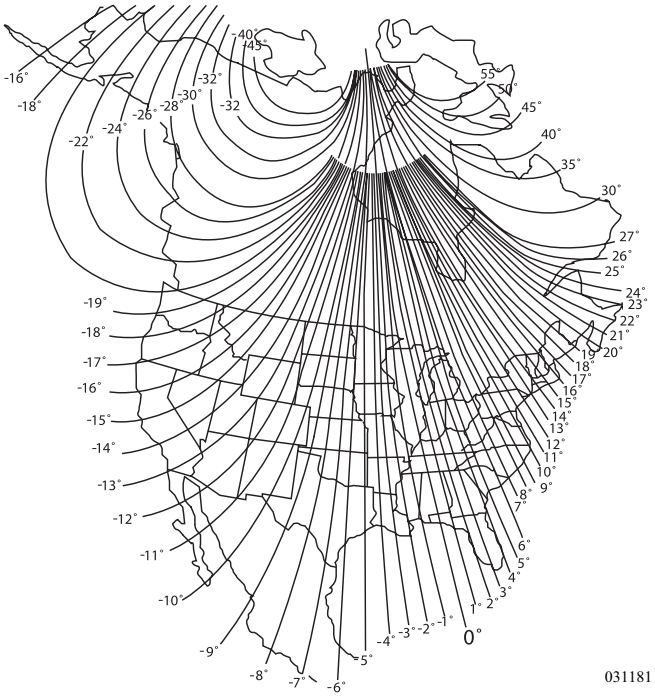

Calibration is accomplished by selecting **START CALIBRATION**, then driving in a full 360-degree circle. At the end of driving this loop, select **STOP CALIBRATION**. A successful calibration will cause a "Calibration Successful" message to display. A calibration that fails will display "Calibration Fail" along with a failure code.

<u>NOTE:</u>
Other Aladdin™ functions and screens are discussed in respective sections of this manual.

SATELLITE RADIO (Optional)

The satellite radio is a digital signal decoder and tuner. Signals are transmitted from the ground station to one of two GEO (Geostationary Earth Orbit) satellites orbiting over the continental United States. The satellite then transmits the signal to the exterior surface-mounted antenna located on the roof of the motorhome. The radio receiver decodes the transmission and plays the selected channel within that transmission. Signals are also transmitted to ground repeater for listeners in urban areas where the satellite signal can be interrupted. This means high quality programming and sound delivered directly to the satellite radio without signal fade.

NOTE:
For information regarding subscriptions and coverage areas visit XM Satellite online at www.xmradio.com or call 1-800-967-2346.

INFORMATION:
For detailed information and operating instructions on the satellite radio, refer to the manufacturer's manual located in the Owner's Information File.

ROOF ANTENNAS

Several antennas are located on the roof. Antennas include the satellite radio, OnStar, cell phone, CB, AM/FM dash radio, and "batwing" for local TV reception.

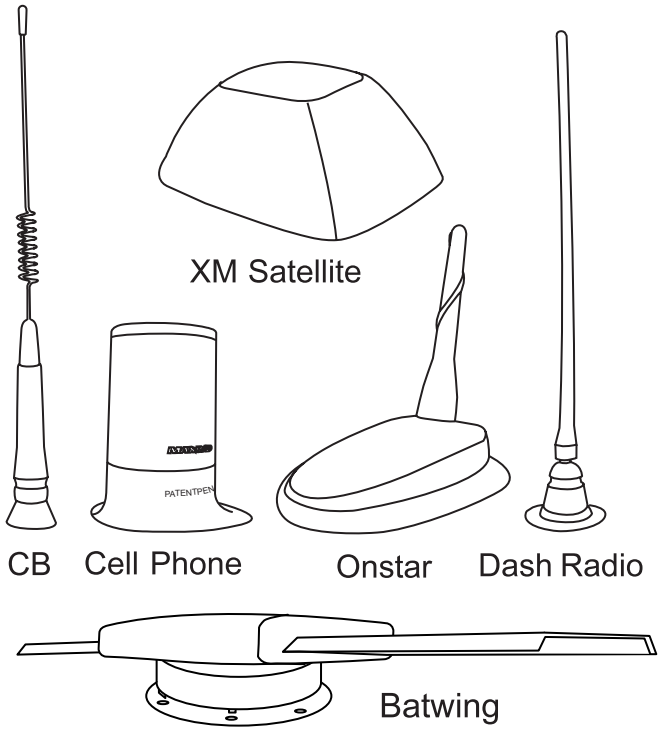

The following paragraphs will discuss the operations and various components that make up the entertainment center.

INFORMATION:
It is recommended to become familiar with individual components. Refer to the respective manual for detailed instructions on operating individual components.

NOTE:
All components of the entertainment system require 120 Volts AC to operate. Hook to shore power, start the generator or turn on the inverter. The satellite system requires 12 Volts DC to operate. Turn on the interior house power using the battery cut-off switch.

Television (Front) Lockout Feature

The ignition switch controls the outlet for the front TV, allowing the front TV to be operated only while the vehicle is at rest. Viewing time of the front TV from the inverter depends on state of charge of the house batteries, and any additional 12 Volt DC lighting being used.

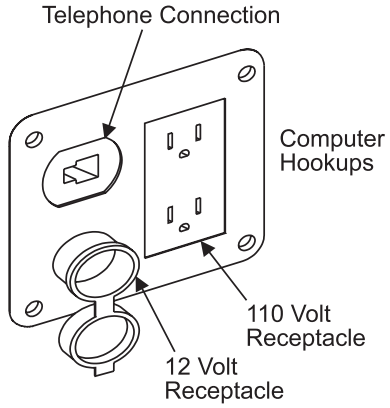

Located at Entry Step 030804

Connections - Cable TV, Computer & Phone

The motorhome is equipped with cable TV and telephone hook-ups, located in the electrical service center. For convenience, auxiliary outlets are located at the co-pilot seat and on the optional computer desk.

Television Inputs

The televisions have many different input that can be selected such as: a satellite dish, DVD/VCR player and/or the roof antenna. The TV tuner interfaces these different input signals from the various components to the televisions.

The Sharp TV has three inputs sources with a selection of five outputs:
• Antenna • Cable • VCR • DVD • Satellite

Television - Ceiling Mounted (Optional)

The flat-screen television is mounted to an assembly that will stow the television into the ceiling during travel. The "hide-a-way" system uses a 120 Volt AC motor to lower and raise the television. A 12 Volt DC ignition safety lock prevents the television from lowering during travel.

NOTE:
The ignition must be off to raise or lower the TV.

To Lower or Raise the Television:

1. Turn on the interior house power using the battery cut-off switch.
2. Hook to shore power, start the generator or turn on the inverter.
3. To Lower: Push and hold the momentary switch. It will lower after a short delay. Release the switch when fully lowered.
4. To Raise: Push and hold the switch until fully raised.

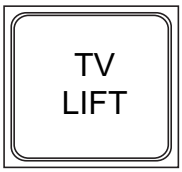

060260c

Antenna Boost

The antenna boost switch will select between watching the TV from the roof antenna or when parked and hooked to shore cable.

To Watch TV Using Roof Antenna:
With the button in the ON position, the input to the TV is set to roof antenna and the LED will illuminate.

To Watch TV Using Shore Cable:
With the button in the OFF position, the input to the TV will be set to shore cable and the LED will be off.

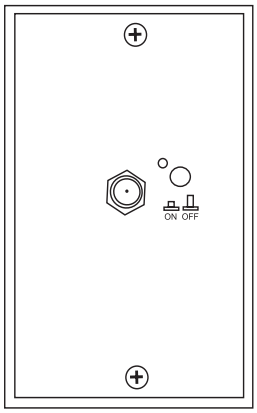

030989b

Located in Driver's Side Overhead Cabinet

TV Antenna

The television antenna is a manual crank style antenna with built in electronics that use 12 Volts DC to "boost" signal strength. Signals that are weak or fuzzy can be amplified by pressing the black selector button. When using the antenna boost, the green LED will be illuminated.

The antenna and booster work together to provide the best possible picture for most situations. Certain conditions occur when no amplification is needed, and in fact may make the picture worse. The television station will send a signal that resembles the waves or rings of water from a rock thrown into a still pond. The radiating television signal can hit an object such as a mountain and come back. This results in a double image. The antenna will receive a signal from the initial pass, and then receive an additional signal from the rebound resulting in a split or double image. In this case, the picture may be improved by no amplification or even lowering the antenna.

CAUTION:
Do not move motorhome with antenna in the raised or partially raised position and risk damage by tree limbs or wires. Worm gear damage or breakage may result.

WARNING:
Before raising antenna, make an outside visual inspection for any obstructions or overhead electrical wires. Damage to the antenna, severe shock, personal injury or death can occur from inadequate clearance.

To Raise the Antenna:
- Rotate the crank handle clockwise to raise the antenna (approximately 14½ turns).
- Pull down on the outside directional wheel and rotate the antenna until the best picture is obtained. The directional wheel is spring loaded.

To Lower the Antenna:
- Pull down on the directional wheel and align arrows together.
- Rotate the crank handle counterclockwise to lower the antenna fully into the cradle. Make an outside visual inspection to ensure the antenna is properly stowed.

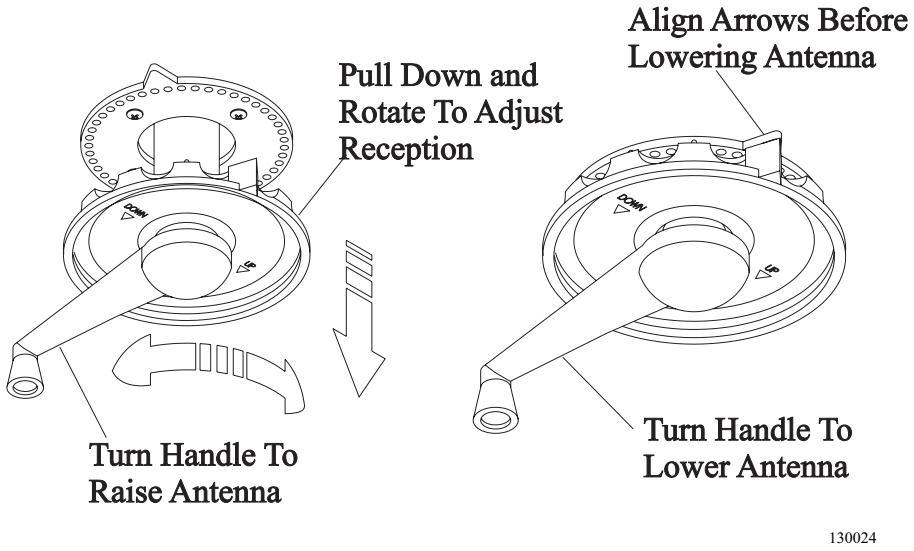

Located above seat pilot

Television - Flat Screen LCD

The TV is equipped with speakers, or use the home theater system for sound. A separate tuner is used to select channels. Extra RCA input jacks for a game console, camcorder or a computer terminal port are located on the front of the tuner.

NOTE:
The flat screen TV requires an adequate video signal for proper operation.

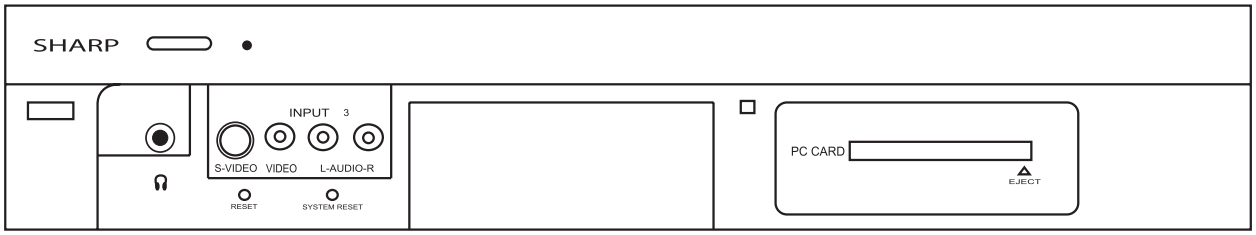

031043e

Operating the Components

Living Room Television -
To Watch TV from the Antenna or Shore Cable:

- Hook to shore power, start the generator or turn on the inverter.
- Use the battery cut-off switch to turn on interior house power.
- Lower the TV by pressing and holding the **TV Lift switch**.
- Turn on the main **Power** button on the Sharp tuner. Press the power button on the TV remote to turn TV on. Ensure the TV LED on the TV remote is illuminated. Use the Function button on the TV remote to select TV. Press the **Input** button on the TV remote until Input Source indicates **TV**.
- Select either Roof Antenna (**On**) or Shore Cable (**Off**) on the Selector switch in the roadside overhead above the pilot seat.
- Select the desired channel and adjust volume using the TV remote.
- If home theater sound is desired, turn on the Bose system. Press the **Source** button on the Bose system until **TV** displays. Adjust volume to desired level.

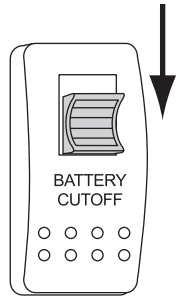

Release
Lock

080375

060260c

To operate TV lift,
push & hold switch.
(12 volt &110 power
are required)

Information Label

100197

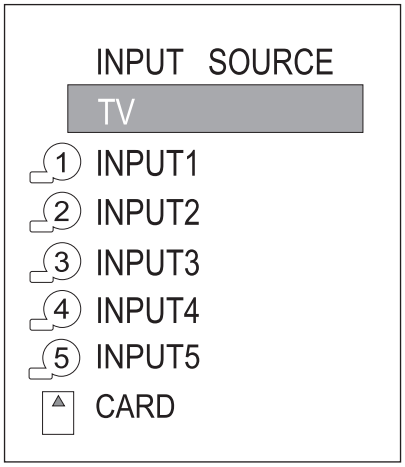

Living Room Television Input Menu

031079c

To Watch a DVD:

- Hook to shore power, start the generator or turn on the inverter.
- Use the battery cut-off switch to activate the interior 12 Volt power.
- Press the Power button on the TV remote to turn on the TV. Press the **Input** button on the TV remote until Input Source indicates **Input 2**.
- Press the **CD/DVD** button on the Bose remote or press the **Source** button on the Bose system until DVD displays. Press the **Open/Close** button. Place a DVD on the tray, label side up. If necessary, press **Play**.
- Adjust the level of sound on the Bose system or TV.

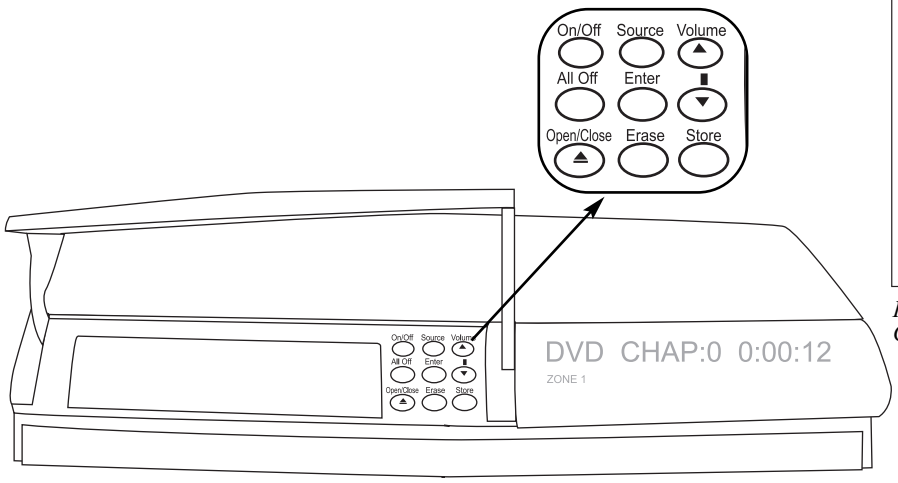

031012

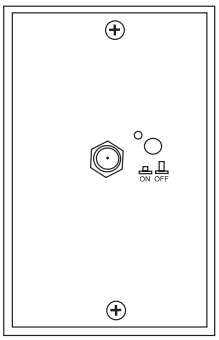

Roof Antenna/Shore Cable Selection 030989b

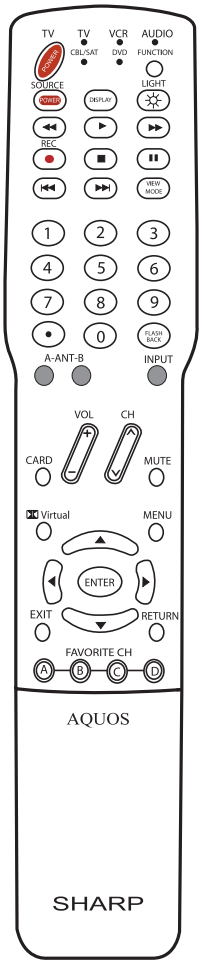

031161

To Watch the Satellite:

- Hook to shore power, start the generator or turn on the inverter.
- Use the battery cut-off switch to activate the interior 12 Volt power.
- Press the **Power** button on the TV remote to turn on the TV. Press the **Input** button on the TV remote until Input Source indicates **Input 1**.
- Turn on the Satellite receiver (requires subscription).
- Turn on the Satellite dish at the front overhead above the pilot seat.
- Adjust volume using the **TV** remote.
- If home theater sound is desired, turn on the Bose system. Press the **Source** button on the Bose system until **TV** displays. Adjust volume to desired level.

NOTE:

Inclement weather conditions may adversely affect the acquisition of a satellite signal. Degraded audio and video signals through the receiver will result.

To Play a Music CD:

- Hook to shore power, start the generator or turn on the inverter.
- Use the battery cut-off switch to activate the interior 12 Volt power.
- Press the **DVD** button on the Bose remote or press the **Source** button on the Bose system until **DVD** displays. Press the **Open/Close** button. Place a **CD** on the tray, label side up. If necessary, press **Play**.

Hooking Up Auxiliary Equipment:

Additional equipment can be hooked up to the Front LCD tuner. The auxiliary RCA jacks (Input 3), headphones, S-Video, and a PC card port are located behind the access door.

INFORMATION:
Before hooking up additional equipment, refer to the equipment manufacturer's manuals for cautions and instructions.

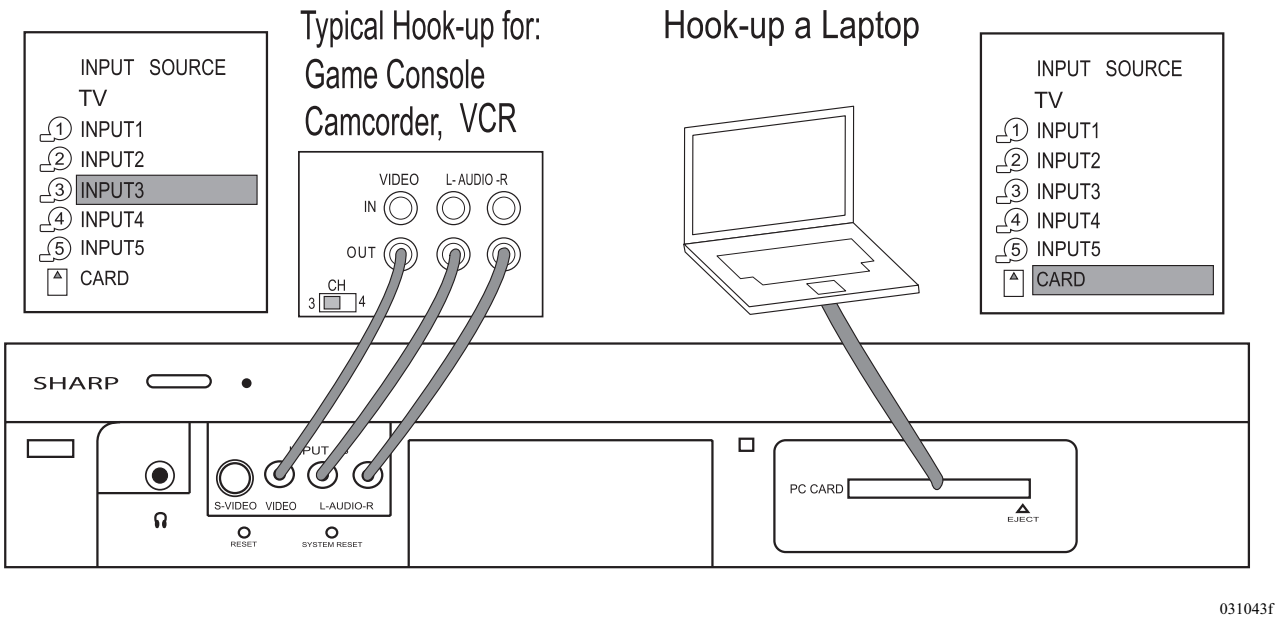

031043f

Bose System

The Bose Lifestyle 35 is used exclusively for audio of the Home Theater System. Audio signals from each of the individual components; VCR, DVD, Antenna, Cable and Satellite Receiver are amplified through the Bose system. The Bose system also has AM, FM and will play CDs. Two sound Zones are available. Zone 1 is the interior speakers. The system automatically defaults to Zone 1 when turned on. Zone 2 is for the optional Bay Entertainment speakers.

NOTE:
Zone 1 and Zone 2 will operate at the same time.

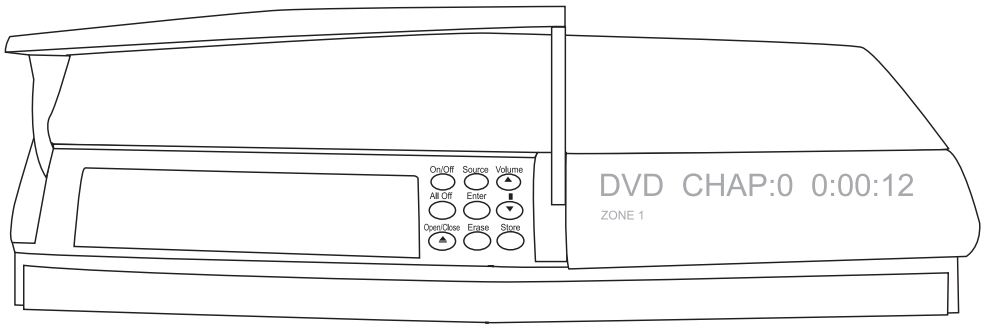

031012

The TracVision SF is a self-contained stationary, automatic satellite TV system. The TracVision SF automatically acquires and tracks DirecTV®, DISH Network™ and Bell ExpressVu satellite signals throughout the continental United States when the motorhome is in a stationary position.

NOTE:
The satellite receiver must be turned on for the system to function. The receiver has many options.

WARNING:
TracVision SF is a self-acquiring satellite TV antenna for use when the motorhome is stationary. The system is not designed to track the TV satellite when the motorhome is in motion.

NOTE:
For specific satellite coverage areas and providers visit KVH online at www.kvh.com.

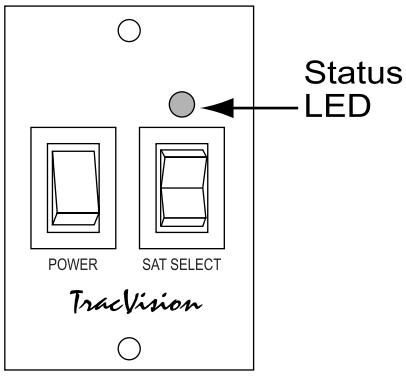

Satellite Receiver Panel

031028

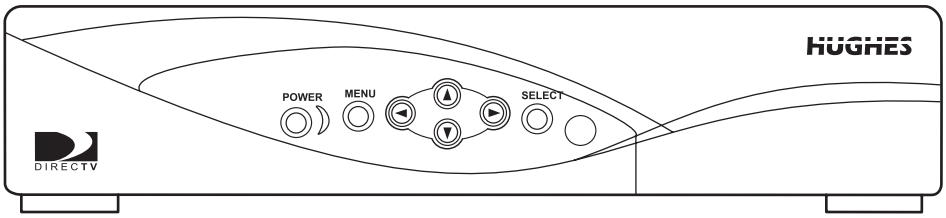

031055a

The Internal Receiver Descrambler (IRD) receives satellite signals from the antenna for decoding, processing, and channel selection, and then sends those signals to the TV for viewing. The IRD also provides the interface for the user to activate authorization for reception.

INFORMATION:
Refer to the IRD User's Manual for complete operating instructions.

The TracVision SF satellite system requires a clear view of the southern sky to receive satellite signals. Ideal antenna site has an unobstructed view of 15º to 75º in the Southern horizon.

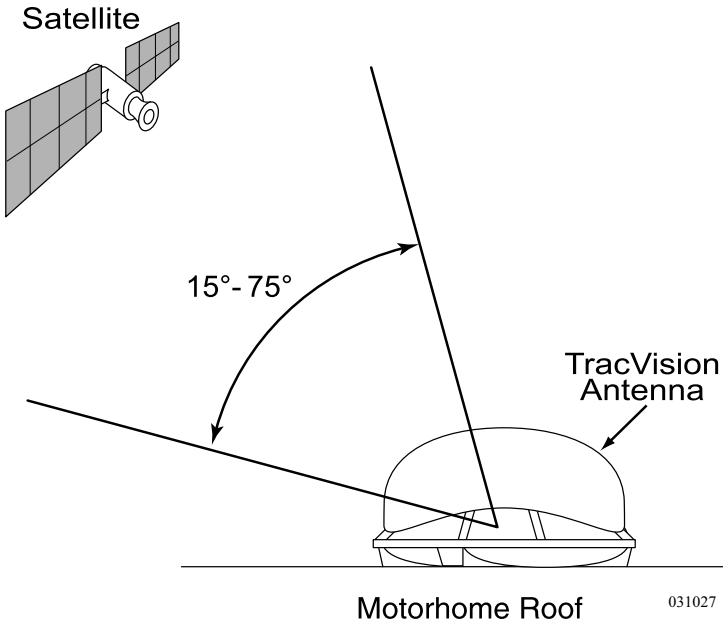

031027

If the satellite antenna receives intermittent signals, or cannot locate the satellite, check around the motorhome for objects that could be blocking the signal, such as trees, building, etc. The satellite antenna must be located in the selected satellite's coverage area in order to receive a signal.

NOTE:
As part of the startup process, the TracVision SF System will default to channel 200, a program directory. This is the system's means of verifying that it has identified and is tracking the correct satellite. Once channel 200 appears, wait at least another 30 seconds before changing the channel to ensure that the system has completed the startup routine.

System Start-up:

- Upon power-up, the system performs a set of start-up routines.
- Antenna then searches for a TV satellite.
- After locating a satellite, the IRD data connection determines whether the satellite signal can be decoded. If so, the antenna locks onto and tracks the satellite.

NOTE:
Once the startup procedure is complete and the antenna is locked onto the correct satellite, the TracVision SF power switch may be turned off to avoid unnecessary discharge of house battery power. Because the antenna LNB receives its power from the IRD, the antenna will continue to receive the satellite TV signals and relay them to the IRD.

NOTE:
If the antenna is unable to locate the desired satellite, refer to Section 4 - "Troubleshooting" of the TracVision SF User's Manual for possible causes and corrective actions.

"Instant On" Operation:

As part of operation, the TracVision SF routinely saves the satellite position to memory. When TracVision SF is powered up, the system looks at the satellite's last saved position and if the motorhome has not changed location, the antenna will immediately acquire the signal.

If the motorhome moves after the TracVision SF is turned off, the antenna will quickly carry out normal initialization routine to re-acquire the satellite. To turn off the TracVision SF system, press the POWER button.

NOTE:
It is highly recommended that the TracVision SF be turned OFF prior to moving the motorhome. TracVision SF will not track a satellite while the vehicle is in motion.

TracVision SF system requires the following preventive maintenance to maintain optimum performance.

Monthly:

- Wash the exterior of the radome and base plate assembly with fresh water; a mild detergent may be added to remove grime. **DO NOT** spray the radome directly with high-pressure water.
- **DO NOT** apply abrasive cleaners or volatile solvents, such as acetone, to the ABS dome.

Annually:

- Have the TracVision SF satellite system inspected by a professional RV Technician or TracVision satellite installer.
- Apply full strength liquid dish detergent to the dome surface and allow it to dry. This treatment provides a film on the dome surface that will allow moisture to bead up and roll off.

NOTE:
If a need arises to paint the radome, ONLY use non-metallic automotive paint to avoid degrading the RF signal strength and the reception quality.

INFORMATION:
For information on KVH warranty, repair, and liability policies, please refer to the complete warranty statement provided with the KVH User's Manual.

In-Motion System

STS-200 In-Motion Satellite System:

Turn **on** the switch to allow the dish inside the dome to rotate and acquire the signal from the satellite. If the motorhome is parked, the switch can be turned off after the system has obtained the signal.

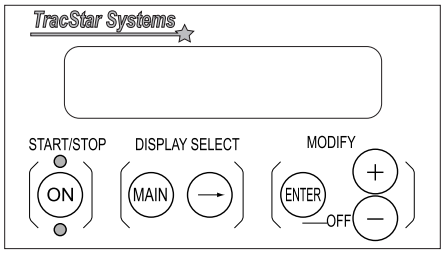

Located in cabinet above driver seat. 031033

To Use the In-Motion System:

- Turn on the In-Motion switch.
- Turn on the Satellite Receiver unit.

NOTE:
Inclement weather conditions may adversely affect the satellite signal acquisition. Degraded audio and video signals through the receiver will result.

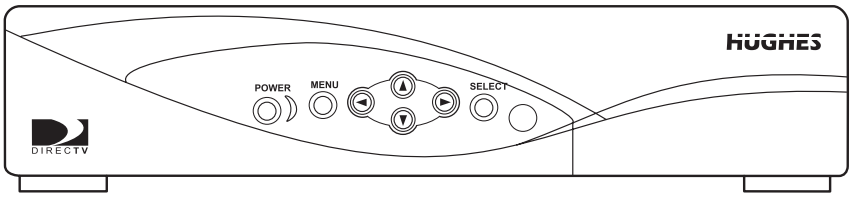

031055a

TV/ENTERTAINMENT SYSTEM - BEDROOM

The bedroom television/entertainment system, separate from the front system, is comprised of a 22" LCD TV with a built in tuner, combination DVD/VCR player and a satellite receiver.

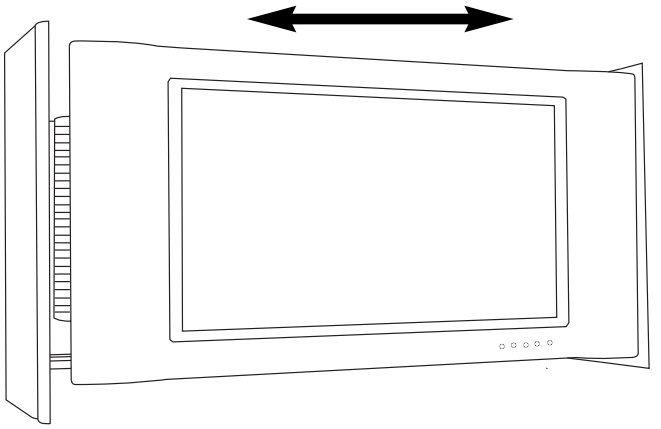

031176

The bedroom system operates similar to the front system. The small red LED on the front of the TV indicates the bedroom TV is in Standby mode. If the small red light is not illuminated, the main power switch for the TV must be turned on. The main power switch is labeled and is located on the top of the TV. The TV will need to be on Channel 3 for DVD, VCR, and satellite.

NOTE:
Reading the individual component owner's manuals is strongly recommended. Many features and combinations for operating the entertainment system components are available.

Bedroom TV Slide:
- Press and hold **TV In** and **TV Out** switches to open and stow TV.
- Turn TV off before stowing. TV does not turn off automatically.

To Watch TV from the Antenna or Shore Cable:
- Hook to shore power, start the generator or turn on the inverter.
- Use the battery cut-off switch to activate the interior 12 Volt power.
- Turn on the TV by pressing the **Power** button using the TV remote. Press the **TV/Video** button until Component displays.
- Select either Roof Antenna (**On**) or Shore Cable (**Off**) on the Selector switch in the roadside cabinet above the pilot seat.
- Select the desired channel using the TV remote.

To Watch a DVD or Video Tape:
- Hook to shore power, start the generator or turn on the inverter.
- Use the battery cut-off switch to activate the interior 12 Volt power.
- Turn on the TV by pressing the **Power** button using the TV remote. Press the **TV/Video** button until Component displays. Set the TV to channel 3.
- Turn on the Panasonic DVD/VCR combo.
- Press the **Open/Close** button below the DVD tray and place disc label side up or insert a videotape into the player. If necessary, press **Play**.
- Adjust sound to desired level.

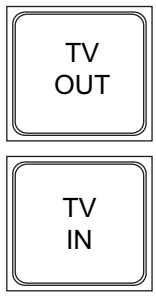

060260c

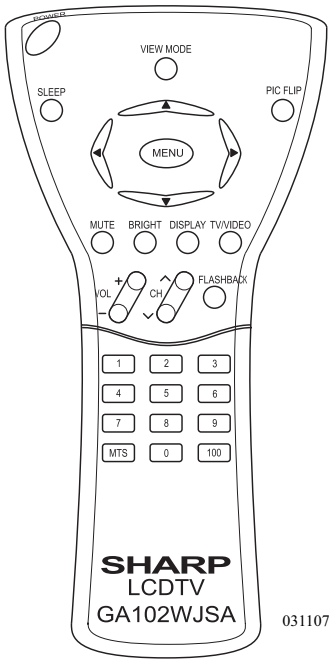

031107

Bedroom TV Remote

To Watch the Satellite:

- Hook to shore power, start the generator or turn on the inverter.
- Use the battery cut-off switch to activate the interior 12 Volt power.
- Turn on the TV by pressing the **Power** button using the **TV** remote. Press the **TV/Video** button until **Component** displays. Set the TV to channel **3**.
- Turn on the Satellite receiver (requires subscription).
- Turn on the Satellite dish at the front overhead above the pilot seat.
- Adjust sound to desired level with TV remote and select channels with satellite remote.

Radio - Bedroom

The bedroom stereo system is an AM/FM stereo tuner, CD player and clock. The system receives power from the front run box.

INFORMATION:
Detailed information with CAUTION or WARNING instructions for the bedroom radio can be found in the manufacturer's operation manual.

To Set the Clock:

1. Press the **Power** button to turn of Standby.
2. Press the **Mode** button to display clock. Press the **Memory** button and the minute segment displays "**00**". The hour segment will flash.
3. Press the **CD-Tuning-Skip** << or >> button to select the A.M. and P.M. hour setting.
4. Press the **Memory** button again and the minute segments will flash.
5. Press the **CD-Tuning-Skip** << or >> button to select minute.
6. Press the **Memory** button to set the time.

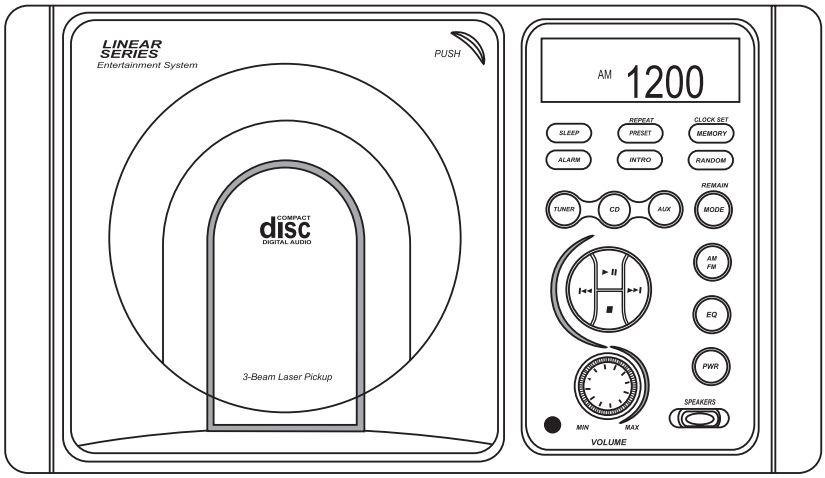

031121

UNIVERSAL REMOTE

Each component of the home entertainment system comes with a remote. To simplify system operation by using only one remote, the MX-800 universal remote is programmed to perform many functions simultaneously. There are minor variations to programming due to the various combinations of component makes and models. Each time the remote performs a function, the icon will illuminate. When adjusting the volume or changing channels, some command functions require repeat pressing of a button, indicated by the icon illuminating briefly. Other commands respond continuously, indicated by the icon staying illuminated as long as the button is pressed.

Subject matters are abbreviated such as **FT TV** for Front TV. From the main menu press the **ON** button, the home theater components turn on. Press **OFF** to turn all components off. Press a button next to a menu item to enter that menu subject. Press a button next to a subject to enable that feature by setting the proper input or channel in the home entertainment system. Macro will display at the bottom of the remote indicating the remote is performing multiple tasks.

Example:

1. On the main menu press **ON**. All components in the home theater system should turn on.
2. Press **FT TV** to display the components that will work through the front TV.
3. Select a desired component such as **TV**.
4. Front TV screen will display.

Step 1- Press ON

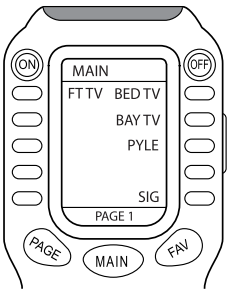

From the MAIN menu press ON. All components will turn on.

Step 2- Press FT TV

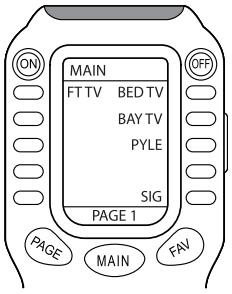

Press FT TV to display component menu

Step 3- Press TV

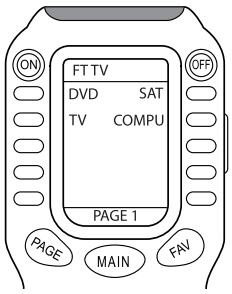

Press TV to watch television and display TV menu

Step 4- Front TV Display

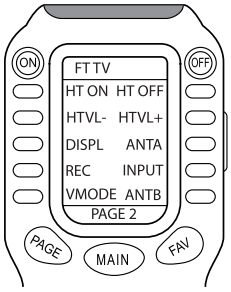

Use VOL to adjust TV volume and CH to select channels. ANTAB selects between antenna and shore cable

031103d

After selecting a component, a sub-menu for the selected component will appear. Press a button next to a subject in the component sub-menu to enter, change or alter that subject. If the desired action for that component is not on Page 1 of the sub-menu, press the **PAGE** button to bring up subsequent sub-menus (if available) for that component. Press the **MAIN** button to return to the main menu.

The remote cannot perform all necessary requirements such as activating a main power button on a component. The remote does eliminate having to use several remotes to accomplish multiple tasks by pressing one button. Not all features or functions of components are programmed into the remote. The programming for the remote is set to interface several components and interrelated functions to obtain a desired command.

NOTE:
The remote is programmed to perform basic commands for the most commonly used features of the components. For in-depth component operation, refer to the OEM manual for that component.

Familiarization with the components and how they interface with each other will ease operation of the remote. If some components have been turned on or off manually prior to the **ON** command from the main menu, some components will be turned on while the others will be turned off. Experiment using the remote and the various functions. Press **MAIN** to return to the main menu at any time.

NOTE:
For ease of operating the MX 800 remote, it is recommended to initially operate each component manually in order to become familiar with how each component operates and how components interface.

To Watch A DVD:

Step 1- Press ON

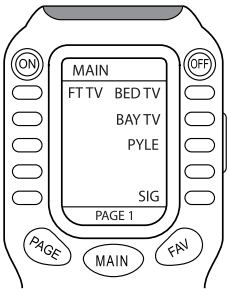

From the MAIN menu press ON. All components will turn on.

Step 2- Press FT TV

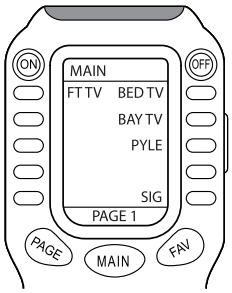

Press FT TV to display component menu

Step 3- Press DVD

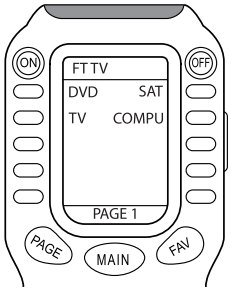

Press DVD to display Bose DVD menu

Step 4- DVD Menu

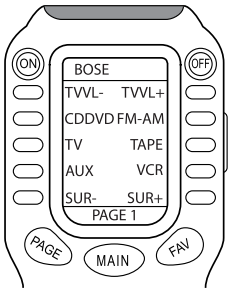

Insert disc. Use TVVL to adjust volume

031103e

Bedroom Panel

The bedroom panel contains various switches that control bedroom lighting and generator remote starting.

To Activate the Panel:
• Use the Battery Cut-off switch to turn on interior house power.

Switches:
• **CLNG LIGHTS -** Turns bedroom ceiling lights on and off.
• **VALANCE ROPE -** Turns bedroom window rope lights on and off on both driver and passenger side.
• **MASTER GEM LTS -** Turns bed overhead lights on and off.
• **DOCK LIGHTS -** Turns all docking lights off and on.
• **CLNG ROPE LTS -** Turns rope lights on and off at ceiling fixture.
• **MASTER OFF -** Turns multiplex switch panels off. Another Master Off switch is located in the living room above the co-pilot seat.
• **GEN START/STOP -** Starts and stops the generator. Also displays generator fault codes.
• **TV IN/OUT -** Opens and stows the bedroom TV. Another TV switch is located on the TV cabinet.

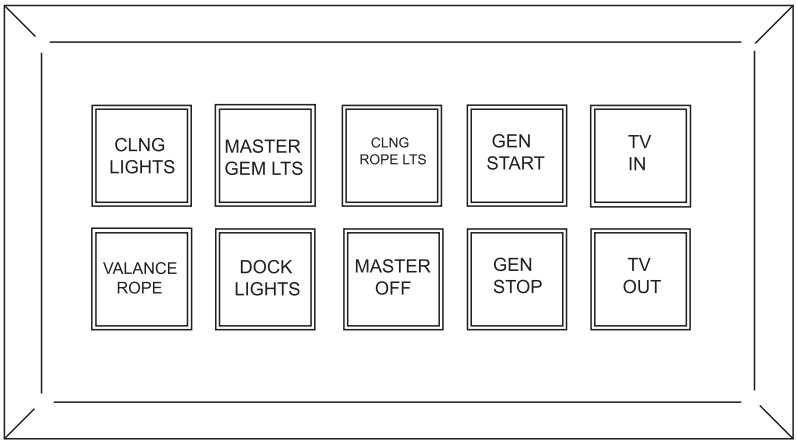

Bedroom Switch Panel 060279

<u>NOTE:</u>
Certain lights may be dimmed by holding the switch down.

The exterior entertainment system is located in a curbside bay. The main power button (located on top of the TV) must be turned on to place TV in Standby. The TV can then be turned off and on using the TV remote.

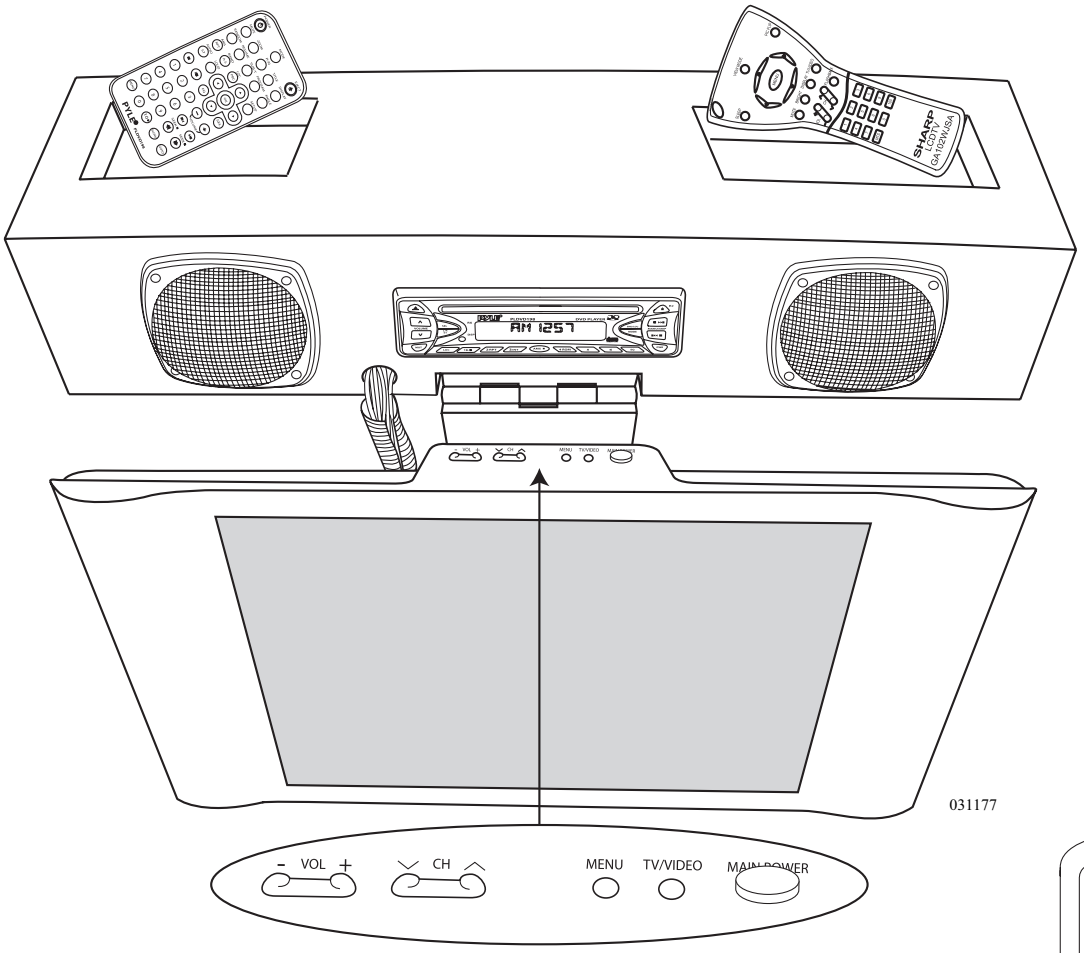

Main Power Button is located on top of TV.

Bay Entertainment:

The optional bay entertainment consists of a stowable LCD TV and DVD/CD/AM/FM radio. Inside storage compartments hold the TV and DVD remotes.

NOTE:
The entertainment system requires 120 Volts AC to operate. Hook to shore power, start the generator or turn on the inverter. The satellite system requires 12 Volt DC to operate. Turn on the battery cut-off switch.

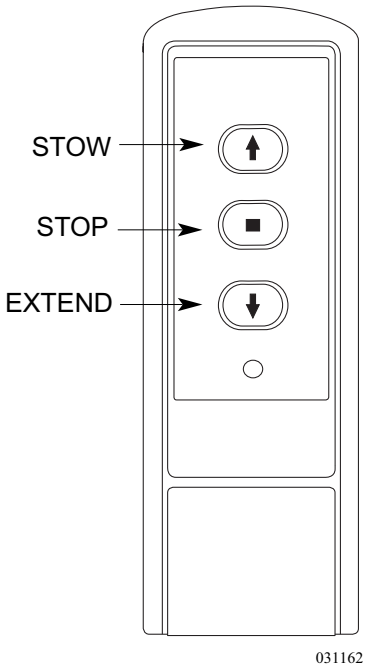

Bay Entertainment Stow Remote

To Watch TV from the Antenna or Shore Cable:

- Open the stored entertainment system using the remote.
- Turn on the bay television using the TV remote.
- Select either Roof Antenna (On) or Shore Cable (Off) on the Selector switch in the roadside cabinet above the pilot seat.
- Select channel and adjust volume using the TV remote.
- If necessary raise and rotate the antenna to obtain best picture or hook to shore cable.

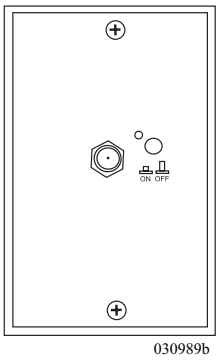

Antenna Boost

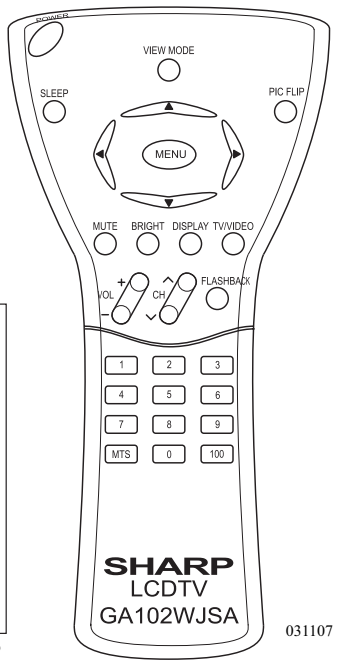

Bay LCD TV Remote

To Watch the Satellite Dish:

- Turn on the bedroom satellite receiver.
- Turn on the bedroom VCR/DVD player and select channel 3 using the VCR/DVD remote.
- Turn on satellite dish at front overhead.
- Turn on the bay television. Press the TV/Video button on the basement TV remote until AV2 displays.
- Adjust volume using TV remote.

To Play a DVD:

- Turn on the bay TV. Press the TV/Video button on the bay TV remote until AV1 displays.
- Insert DVD in player and press Play button on DVD remote.
- Adjust volume using the basement TV remote.

TIP:
To watch a video tape on the bay TV, select AV2 on the bay TV and insert a video tape in the bedroom VCR/DVD player.

Playing a CD:

- Slide CD in player. CD will automatically play.
- Use player remote to select tracks and make volume adjustments.

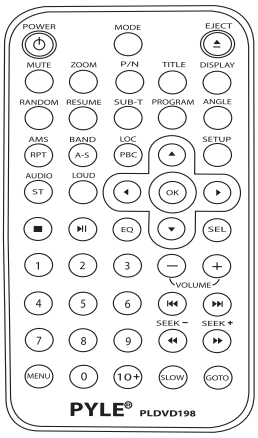

Bay Radio Remote 031160

Playing the Radio:

- Select radio using Mode button on the radio face or on the remote until a station displays.
- To tune use the + or - buttons on the right of the radio face or the Bay Radio Remote Seek buttons on the remote.
- Select AM/FM using the Band button on the remote or BND on the radio (3 FM, 2 AM).
- Adjust volume using the remote or controls on the radio face.

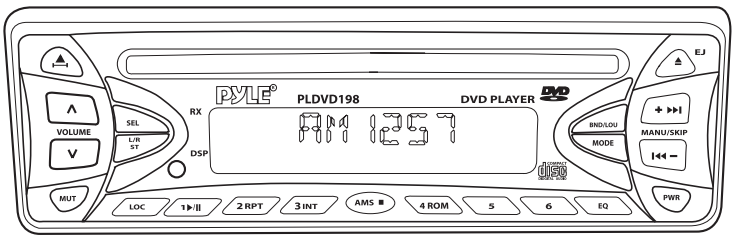

Bay Radio 031163

~ NOTES ~

~ NOTES ~

Signature 2005

Water Systems ▪ Section 6

WATER SYSTEMS - INTRODUCTION.....265
WATER TANKS 266
Measurements & Calibration 266
WATER - POTABLE 268
Hose Reel 268
City Water Hook-up.....269
Fresh Tank Fill 269
Gravity Fill.....270
PLUMBING MANIFOLD 270
WATER PUMP.....271
Water Pump Troubleshooting.....272
Pressure Accumulator Tank.....273
WATER FILTERS.....273
Galley Water Filter & Sanitizer (Opt.).....274
Maintenance 276
WATER SYSTEMS.....277
Troubleshooting 277
Disinfecting Fresh Water.....278
FAUCETS.....279
WASTE WATER SYSTEMS 280
Proper Waste Disposal.....280
What Not to Put in Waste Holding Tanks.....280
What to Put in Holding Tanks 281
Waste Drain & Sewage Tanks.....281
Waste Drain Hose 282
Tank Flush 283
WASTE PUMP (Opt.).....285
TOILET.....287
Cleaning & Maintenance.....288
Drain Traps & Auto Vents 289
COLD WEATHER CONDITIONS.....290
Cold Weather Storage 290
WINTERIZATION.....290
Using Air Pressure 291
Using Nontoxic Antifreeze.....292
De-winterization 293
SERVICE CENTER 294
WATER BAY (Typical).....295
WATER SYSTEM DIAGRAM.....296

This section contains information about the operation and care of the various water system equipment found in the motorhome. Optional water equipment will also be discussed, so not all information may be applicable to the motorhome. More detailed information with **CAUTION** or **WARNING** instructions for the various equipment, other than what is found in this section, can be found in the manufacturer's manual in the owner information box.

It is hard to imagine how much water is used by the average person. Newcomers to a self-contained motorhome soon discover water does not last long unless consumption is drastically reduced. For example, less water can be used for showering if the shower is turned off while soaping down, then turned back on to rinse. This way a good shower uses a couple gallons of water or less. There is plenty of water to meet personal needs once habits are adjusted.

Fresh Water System:

The fresh water system consists of the fresh water tank, water pump, water filter, gravity fill connection, accumulator, and a retractable water hose for potable water use only. Proper care of the hose is a must. After each use, drain the water hose and roll it up onto the hose reel. Attach the pressure regulator and end cap to keep out debris and insects.

Waste Water System:

The waste water system consists of a waste holding tank (grey water), sewage holding tank (black water), flush system, toilet and drains.

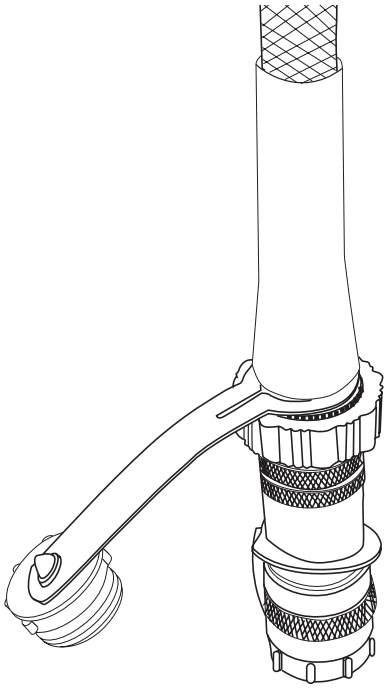

Water Pressure Regulator Attached to Hose Reel 040480m

<u>WARNING:</u>
Water is electrically conductive. Do not use any electrically powered item or electrical outlet that may be exposed to a water source, such use can result in a serious shock causing injury or death.

WATER TANKS
Measurements & Calibration

The Aladdin™ system is used to monitor various systems including holding tank capacity. There are two ways in which the Aladdin™ system can monitor the tank status.

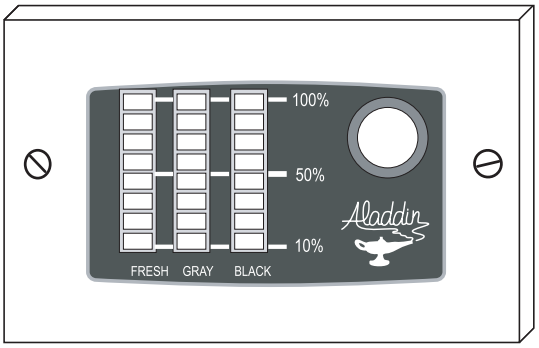

040522b

From Outside the Motorhome:

Located in the water service center is a monitor panel that will indicate at a glance the tank status of the Fresh, Grey and Black tanks. These readings are rounded to the nearest 10th of a percent. Press the **green** button to wake the Aladdin™ system. The status bars illuminate when the system is operating.

NOTE:
If the system is awakened from the monitor panel it can be shut off from the monitor panel. Default shut down is 20 minutes.

From Inside the Motorhome:

Access the Main Menu, move the joystick until the cursor is next to Coach Tank/Misc Status. Move the joystick right to display tank status.

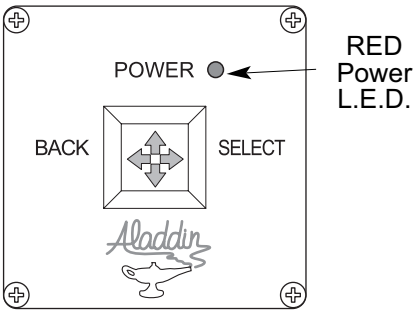

Aladdin Joystick 080377d

MAIN MENU

> CAMERA SELECT
ENGINE/TRANS STATUS
COACH ELECTRICAL STATUS
COACH TANK/MISC STATUS
TRIP METER SELECTION
TIME/ALARM FUNCTIONS
SYSTEM OPTIONS
POWER DOWN ALADDIN

The Coach Tank/Misc Status screen displays:

- Fresh, Grey and Black tank percentage full and corresponding gallons.
- LP-Gas tank percentage of full.
- Basement and Outside temperatures.
- Compass Heading.

COACH TANK/MISC STATUS

	PCT	GAL
FRESH TANK	XXXX	XXXXX
GRAY TANK	XXXX	XXXXX
BLACK TANK	XXXX	XXXXX
LP TANK	XXXX	XXXXX
BASEMENT TEMP	XXXX	F
OUTSIDE TEMP	XXXX	F
COMP HEADING	XX	XXX

To access the **Main Menu**, scroll down to the **Systems Options** screen.

```
SYSTEM OPTIONS

ALADDIN MODEL  4XX-05  V3.01
JOYSTICK FIREWARE       V

SCREEN COLOR:     01
TEXT COLOR        16
SENSOR MODE:      NORMAL
> SYSTEM SETUP
COMPASS CALIBRATION
```

Systems Options screen displays:

- Screen Color
- Text Color
- Sensor Mode
- System Setup
- Compass Calibration

System Setup:

System Setup, only to be used by a technician initializing or troubleshooting the system, requires the access code **1218**.

```
SYSTEM   SETUP   MAINT   CODE

ENTER   CODE:

↑   0000
```

020195e

```
SYSTEM SETUP

SET TANK CAPACITIES
TANK CALIBRATION
ELECTRICAL CALIBRATION
```

020214c

NOTE:
Only service personnel should enter the access code.

Move the joystick to the right to enter **Set Tank Capacities**. Move the joystick Up or Down to select the tank. Move the joystick right to enter. Move the joystick Up or Down to change the Hundreds value. Move the joystick right from the hundreds digit to set.

```
SET TANK CAPACITIES

>  FUEL TANK    =  150 GAL
   FRESH TANK   =  100 GAL
   GRAY TANK    =   56 GAL
   BLACK TANK   =   40 GAL
   LP TANK      =   26 GAL
```

020216c

Set Tank Capacities Screen:

The purpose of setting tank capacities is to program the Aladdin™ system fuel and holding tank capacities in gallons. The Aladdin system uses the fuel tank capacity information to estimate fuel remaining calculations.

Calibration:

The tank sensors must be calibrated individually so the Tank Interface Module knows the characteristics and height of the holding tanks.

NOTE:
Calibration is performed at the factory. Calibration should be verified when the motorhome is new, and should only require additional calibration if a component is replaced in the system.

Tank Calibration Screen:

Displays the current value of each of the calibration parameters, and RAW data value from the Tank Interface Module.

NOTE:
The sensors measure the tank in millimeters. Incorrect tank capacities will provide incorrect readings. Calibration settings are memorized if the system loses power.

NOTE:
The Aladdin™ system must be in Normal mode to allow the Tank Level Sensors to memorize calibration settings.

Empty Calibration:

Empty calibration must be done with the tank empty. All that is necessary is to enter the value of the raw data (displayed on the bottom of the calibration screen).

Full Calibration:

Full calibration can be performed at any time. If the tank is full (verified by visual tank inspection), enter the current raw value. If the tank is not full, it is necessary to measure the tank height (from centerline of the sensor to the top of the tank in millimeters). Add this value to the empty calibration value, and subtract 19, then enter this number for the full calibration value.

```
          TANK CALIBRATION

>   CAUTION:  SEE MANUAL
    EMPTY FRESH TANK   =    14
            GRAY TANK  =    15

            BLACK TANK =    15
    FULL FRESH TANK    =    89
            GRAY TANK  =   174
            BLACK TANK =   174
    RAW   Fxxxx  Gxxxx  Bxxxx
```

020218F

```
   FRESH   TANK   EMPTY   CAL
  ENTER ECAL VALUE:

              xxxx
              ^

         ECAL   =    RAW
     TANK  *MUST* BE EMPTY

            RAW:  xxxx
```

020218G

```
   FRESH   TANK    FULL    CAL
    ENTER FCAL VALUE:

              xxxx
              ^

   FCAL = RAW AT FULL TANK
   FCAL = ECAL + THmm - 19
      RAW:  xxxx   ECAL xxx
```

020218H

WATER - POTABLE
Hose Reel

The convenience of the water hose reel eliminates the need to store a potable water hose in the bay. Use the hose reel for city water hook-up or to fill the fresh water tank. The reel is equipped with a 12 Volt DC motor that retracts the 35' hose after use. The water reel is located in the roadside plumbing service center.

Maintenance:

When using the hose, look for kinks. Periodically fully extend the hose. Straighten the hose on the ground. It is important that the water hose remains clean.

City Water Hook-up

- Remove hose plug and install a water pressure regulator to the water hose.
- Connect the water hose to a City Water hook-up.
- Turn the city water/tank fill valve to the City Water - Closed position.
- Turn on the water supply.
- The water pump can either be off or on. It will not affect the water pump to leave it on.

CAUTION:
Some outside water sources develop high water pressure, particularly in mountainous regions. High water pressure is anything over 55 psi (pounds per square inch). Excess water pressure may cause leaks in water lines. Excess pressure on a hot day can cause the water hose to swell and burst. Attach an additional regulator at City Water connection to protect the water hose.

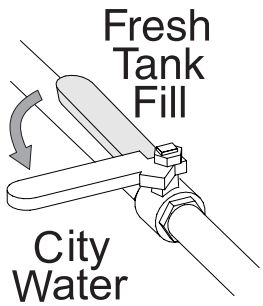

040480o

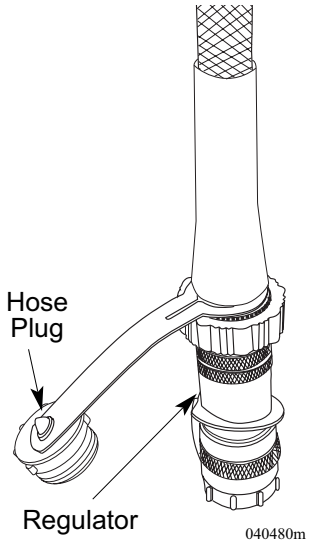

040480m

Water Pressure Regulator attached to Hose Reel.

Fresh Tank Fill

- Remove hose plug and install a water pressure regulator to the water hose.
- Connect the water hose to a City Water hook-up.
- Turn the City Water/Tank Fill valve to the Fresh Water Fill position.
- Turn on the water supply.
- The water pump should be off.
- The water tank is full when water comes out the tank overflow pipe on the roadside of the motorhome. Shut the water supply off as soon as possible.

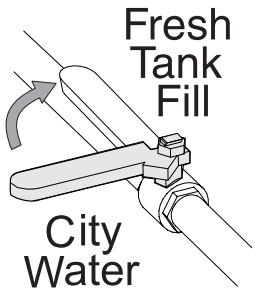

040480q

NOTE:
When filling the fresh water tank, do not leave the hose unattended. Turn off water as soon as it begins to flow out (before a full blast) of the overflow, located under the plumbing service center on the roadside of the motorhome. Use the Aladdin system to monitor tank filling.

To Retract the Hose Reel:
- Disconnect the water hose from the faucet. Do not leave water regulator attached to faucet.
- Press the retract switch and guide the hose onto the reel.
- Install plug in hose when not in use.

Gravity Fill

The gravity fill inlet allows fluids to be added directly into the fresh water tank. When dry camping, water can be poured directly from a container into the fresh water tank. The gravity fill inlet can be used to pour disinfecting solution into the fresh water tank or when using potable RV antifreeze to winterize the fresh water system. Use only potable water sources, solutions and delivery systems when using the gravity fill inlet.

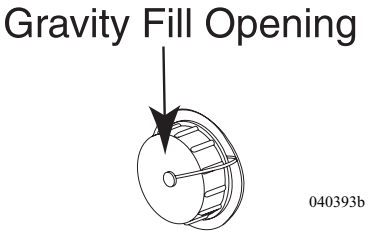

Filling the Tank:

1. Unscrew fill cap taking care to keep cap and inlet clean.
2. Insert potable water hose into inlet.
3. Fill tank until water overflows from inlet.

<u>NOTE:</u>
Do not leave the gravity fill inlet unattended when in use.

PLUMBING MANIFOLD

The plumbing manifold is located behind a locking door in the plumbing service center. The manifold separates the main hot and cold lines. The main hot and cold inputs are divided into the individual branch lines. Water flows unrestricted with no hidden fittings located behind walls.

Each faucet or appliance water line may be turned off. Hot water valves are located on the left; cold water valves on the right. Use the provided key to open or close the valve. When the key is horizontal, the water line is open. Turning the key to the vertical position shuts that water line off. Each water line is labeled for easy reference. Snap the key into the key storage after use.

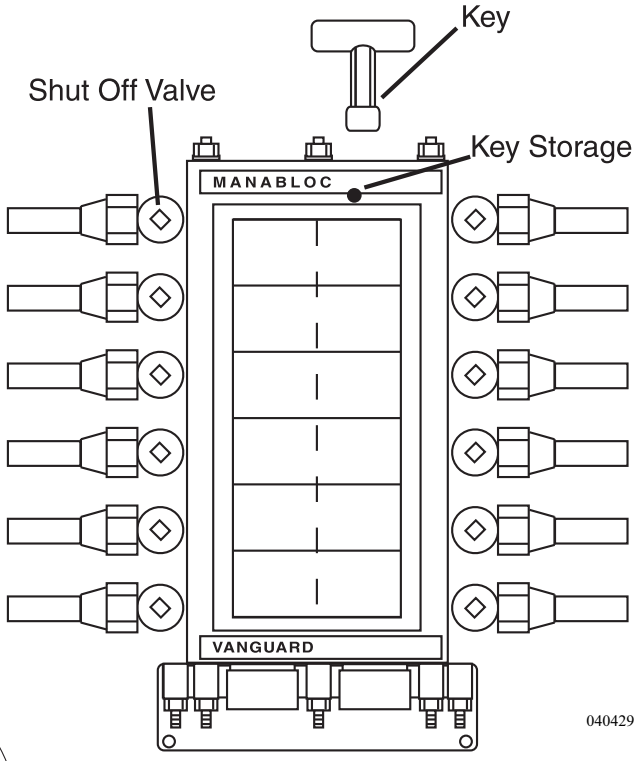

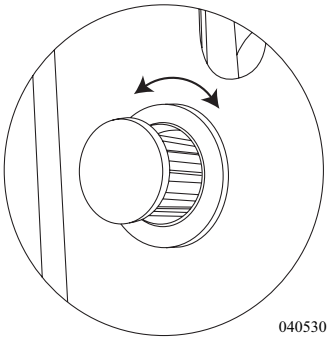

Press knob to expose. Turn clockwise or counterclockwise to open manifold door.

The water pump pressurizes the fresh water system when not connected to city water. The water pump is automatic and self-priming, operating on demand as water is used. The water pump is located in the roadside water bay of the motorhome.

WARNING:
Before leaving the motorhome for extended periods of time (i.e. overnight or longer) be sure that the city water and all water pumps have been turned off. Damage from neglect will be the responsibility of the owner, not the manufacturer.

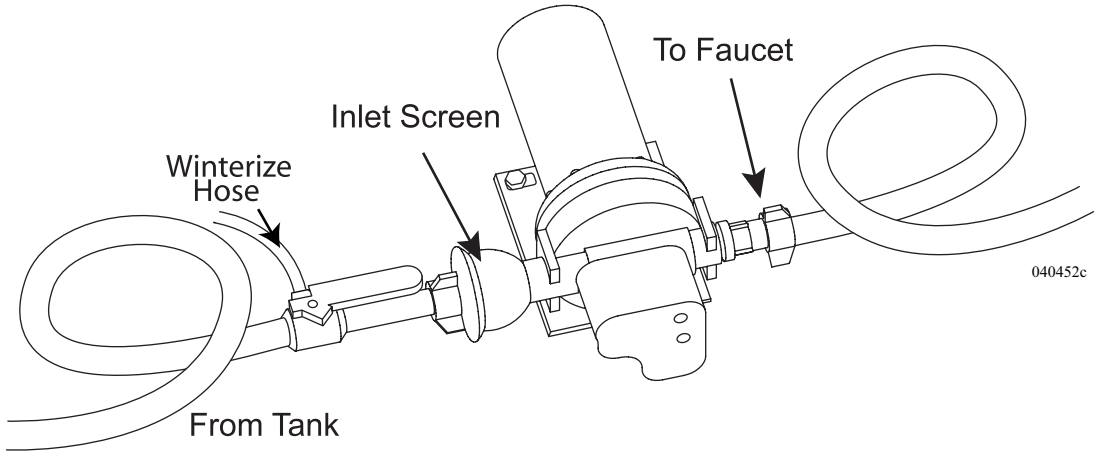

The water pump can be operated from the following locations:
- Bathroom/Vanity
- Service Center
- Galley

To turn the water pump on or off:
- Momentarily press the water pump switch. The indicator lamp will illuminate when the water pump is turned on.

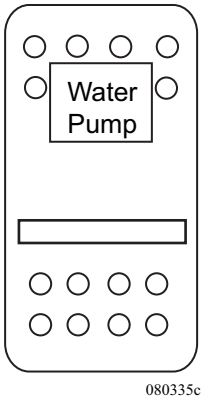

Service Center Water Pump Switch

Interior Water Pump Switch

CAUTION:
Do not continue water pump operation if the fresh water holding tank is empty. Damage to the water pump or electrical supply system may result.

To operate the water pump after unhooking from the city water supply or after storage:
- Close all drain valves and low point drains.
- Fill the fresh water tank.
- Open the hot and cold water valves of each faucet.
- Turn the water pump on. Wait for the water lines to fill.
- Close each faucet when it delivers a steady stream of water (cold water faucets first).

Water Pump Troubleshooting

Vibration induced by road conditions can cause the plumbing or pump hardware to loosen. Check the water pump system for components that are loose. Many symptoms can be resolved by tightening the hardware. Check the following items:

Water pump will not start or blows the fuse:
- Check the electrical connections at the water pump, located in the roadside water bay, fuse or breaker, water pump switch and ground connection.
- Is voltage present at the pump? If voltage is present, the pressure switch may be faulty.
- Check the charging system for correct voltage and good ground.
- Check for an open or grounded circuit or motor.
- Check for a seized or locked diaphragm assembly (water frozen).

Water pump will not prime or sputters (no discharge/motor runs):
- Is the pump inlet strainer clogged with debris?
- Is there water in the tank, or has air collected in the water heater?
- Is the inlet tubing and plumbing sucking in air at plumbing connections (vacuum leak)?
- Check for proper voltage with the pump operating.
- Check the pump housing for cracks or loose drive assembly screws.

Water pump will not shut-off or continues to run when the faucet is closed:
- Check to see if the fresh water/tank fill valve is completely closed.
- Check the output (pressure) side plumbing for leaks and inspect for a leaky toilet or valves.
- Look for a loose drive assembly or pump head screws.

Water pump is noisy or rough in operation:
- Check for plumbing that may have vibrated loose.
- Does the mounting surface multiply noise (flexible)?
- Check for mounting feet that are loose or compressed too tight.
- Look for loose pump head to motor screws.

Water pump is rapid cycling:
- Look for restrictive water flow in the faucets or shower heads.

Pressure Accumulator Tank

The pressure accumulator tank mounts in the roadside water bay near the water pump. The pre-charge pressure in the accumulator tank should be checked monthly.

Accumulator Features:

1. Smooth flow from the faucets.
2. Reduced water pump cycling.
3. A pre-charged air cushion.
4. Elimination of pulsation and water hammer.
5. Water pressure at faucets.

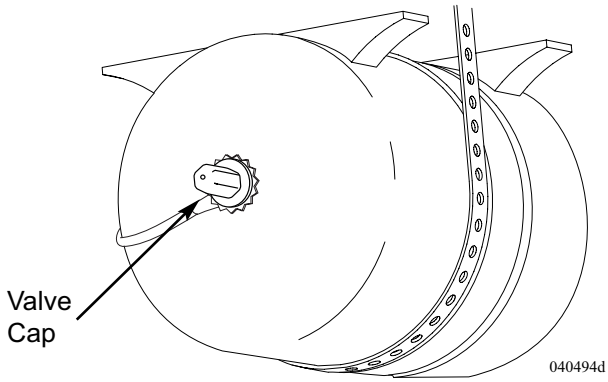

Remove tank valve cap to check air pressure.

The accumulator tank includes a tire valve that is used to pre-charge the tank with air pressure. The pre-charge pressure must not exceed the water pump cut-in pressure, the pressure at which the pump restarts. The water pump has a cut-in pressure of 40 psi. The pre-charge pressure of the accumulator tank is 18 to 22 psi. To check the air pressure in the accumulator tank, the water pump and city water will need to be off. Open a faucet to relieve the water pressure. Check the accumulator tank pressure monthly using a tire air pressure gauge (one that reads low air pressure). Use a hand-operated pump to add air pressure to the accumulator tank only when needed. The amount of airflow and high-pressure from a compressed air system can quickly overcharge the tank, causing the internal bladder or tank to rupture.

WATER FILTERS

The two-stage filtration system filters up to 1,350 gallons between filter changes. The filtration system uses the following filters:

- **First Stage - Five Micron Sediment Filter:** For reduction of suspended solids, dirt and rust. Life expectancy varies with incoming water condition. Recommended change interval depending on usage and incoming water quality.
- **Second Stage - Five Micron Carbon Block Filter:** Improve water quality by reducing objectionable organic chemicals, chlorine, tastes and odors. Recommended change interval depending on usage and incoming water quality.

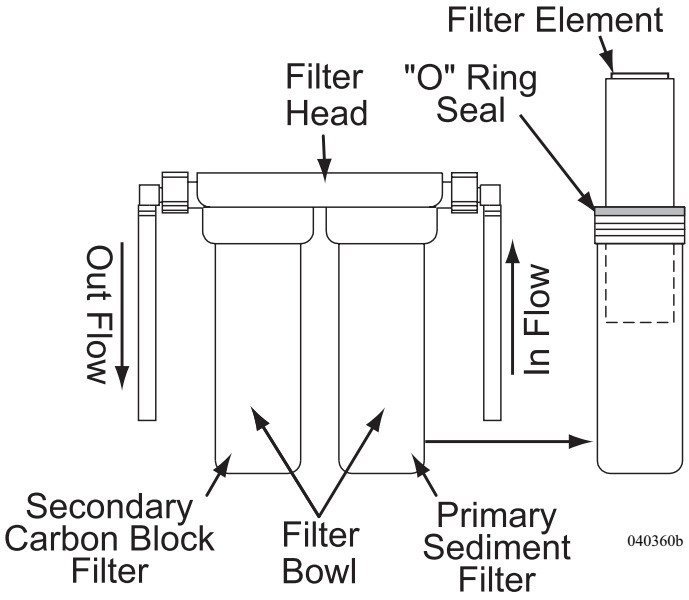

Filters located in Roadside Water bay

Prior to disinfecting the water system with a chlorine bleach solution, remove the filter elements and re-install the filter bowls without the elements. Use the following procedure to remove or change the filter elements.

Removal:
- Turn off the water supply and the water pump.
- Open the faucet to bleed off pressure.
- Unscrew the filter bowl from the filter head.
- Remove the old element and empty any remaining water in the bowl.

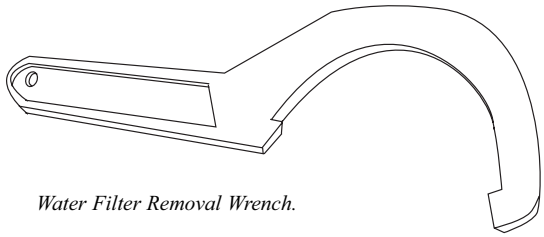

Water Filter Removal Wrench.

040520

Installation:
- Place the elements in the bowls, observing primary and secondary filter locations.
- Screw the bowls onto the filter heads, hand tight.
- Turn on the water pump or city water.
- Open the outside faucet at the plumbing service center and purge air from the filter assembly.
- Check for leaks.

Galley Water Filter & Sanitizer (Optional)

The water filters connect to the galley cold water supply. The dispenser is mounted to the galley top. The unit is located in the passenger side water bay compartment mounted below the motorhome's water filters.

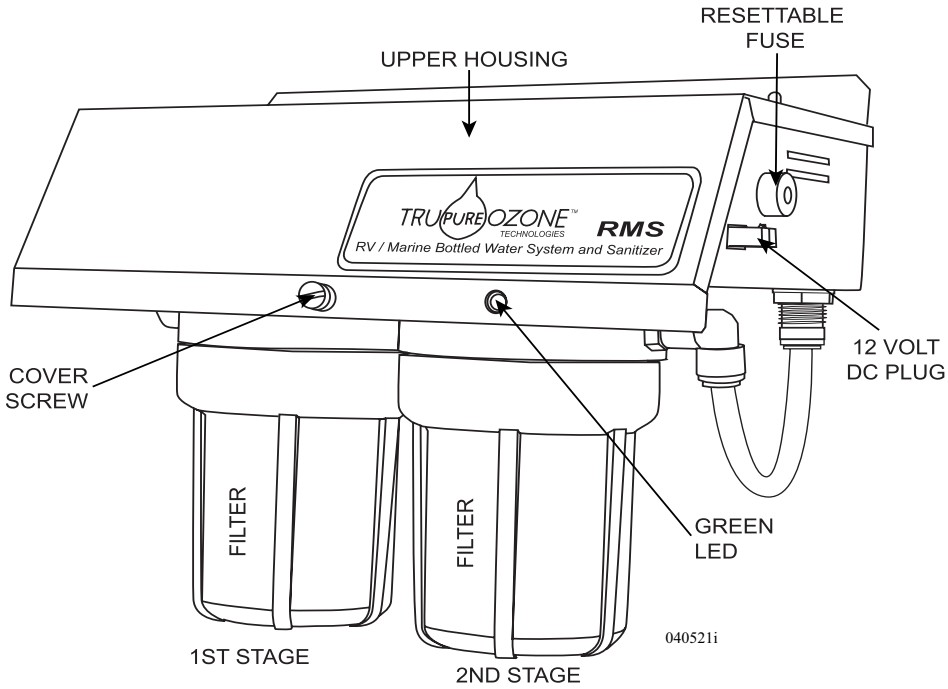

Filters located in Curbside Water bay

The system provides two levels and types of filtration, and then injects powerful ozone gas as the final stage disinfectant. The 1st stage filter is a particulate filter to remove dirt, rust and other contaminant from the water. The 2nd stage filter is a carbon block filter to remove chlorine, organics and other impurities. The ozone injection, between .2 and .25 parts per million at one gallon per minute, destroys micro-organisms and adds a high level of oxygen to the water. Any ozone taste will disappear within a few minutes.

The water can also be used for increasing food freshness and extending food shelf life, as well as sanitizing countertop surfaces and dishes.

CAUTION:
If a leak should occur, immediately shut off the valve labeled galley on the plumbing manifold. Contact a dealer for service.

Inside the upper housing are the following:

A. Electronic Module
B. Transformer
C. Electrode Heat Sink
D. Ozone Electrode Assembly
E. Ozone Gas Transfer Line
F. Anti-backflow Electronic Solenoid Valve
G. Ozone Electrode Assembly
H. Cleanable Glass Borosilicate Dielectric

CAUTION:
Always turn off water supply with galley valve on the plumbing manifold and unplug power from right side of unit before removing cover, changing filters, servicing or maintaining.

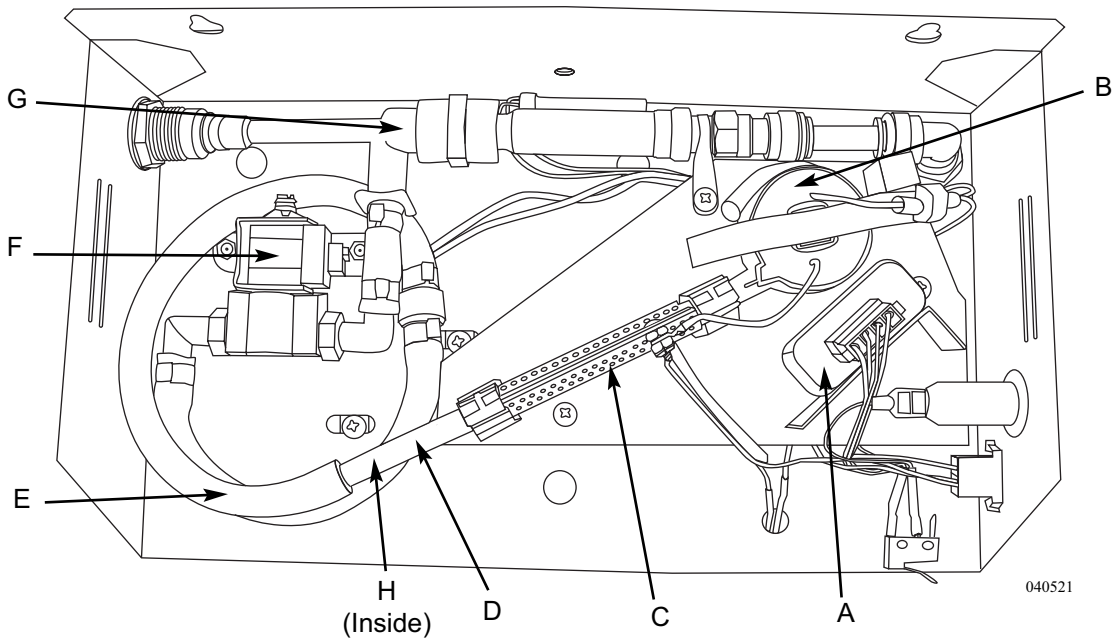

Top view with housing cover removed

Maintenance

Clean the borosilicate dielectric every 30 to 60 days. Change the 1st and 2nd stage filters every three to six months.

To Clean the Borosilicate Dielectric:

1. Remove cover to expose ozone generator.
2. Gently remove the end of the ozone gas transfer line from the left end of the ozone electrode assembly.
3. Grasp the rounded end of the glass dielectric and pull straight out until it is completely free from the stainless steel Ozone Electrode Assembly.
4. Moisten a soft cloth or thick paper towel with soapy water and carefully wipe clean any buildup of the dielectric glass. Dry the glass completely. If the stain on the glass is difficult to remove, apply a small amount of baking soda to the cloth and clean outside of tube.

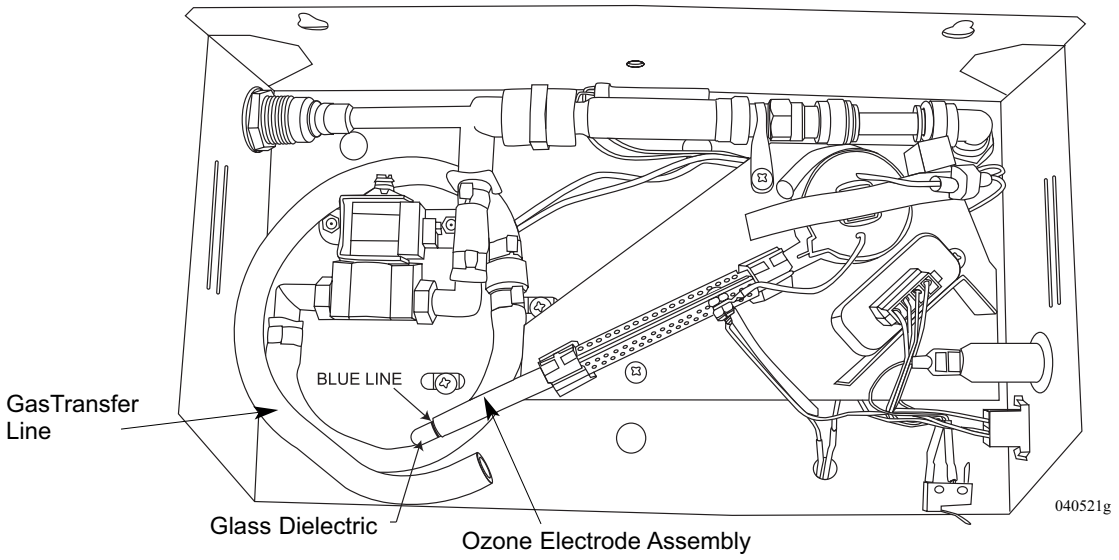

Inside the Upper Housing with Gas Transfer Line removed.

<u>CAUTION:</u>
Do not submerge or allow water to enter into the dielectric. If this happens, place the dielectric on a paper towel in a microwave for one minute or until no moisture is present. Wait for dielectric to cool before handling.

5. Wait for the glass dielectric to completely dry. Gently insert the dielectric back into the stainless steel Ozone Electrode Assembly. Carefully slide the glass dielectric over the stainless steel rod that is inside the outer shell until it seats at the base.
6. Replace the black ozone transfer tubing over the end of the ozone electrode assembly.
7. Replace the outer unit cover and restore power.

<u>WARNING:</u>
Ensure glass dielectric tube is pushed all the way up to the blue line before start-up.

To Change the 1st and 2nd Stage Filters:

1. Use provided latex gloves to avoid cross contamination between old and new cartridges or exposing yourself to contaminants that have been filtered from the water.
2. Turn off the water supply to the galley at the plumbing manifold.
3. Relieve pressure by opening dispenser at sink.
4. Place a shallow container under the filter sump to catch any remaining water. Unscrew the left, 1st stage (filter marked XP), filter sump bottom using the filter wrench.
5. Remove the old cartridge and dispose.
6. Repeat steps 4 and 5 for 2nd stage (filter marked XC) filter.
7. Wash both filter sumps with warm soapy water and rinse.
8. Place new cartridges labeled #1 and #2 in the sump bottoms and re-install matching filter numbers to unit. Hand tighten only. Do not use a wrench.
9. Open cold water supply valve and turn on Tru-Pure Faucet until all air is purged from filter housings and water.
10. Check for leaks.

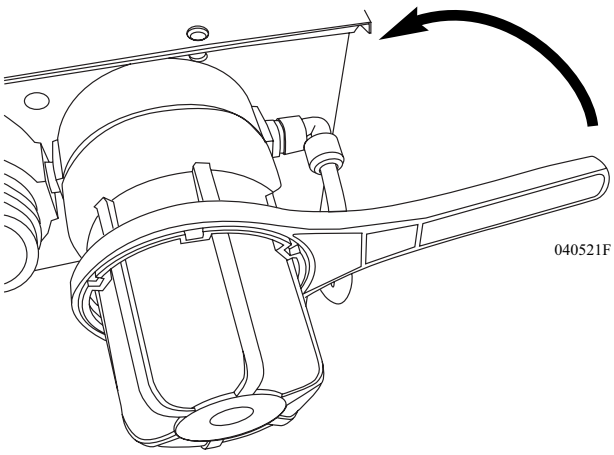

Use wrench to loosen filter only.

<u>CAUTION:</u>
Do not allow system to be exposed to temperatures below 32ºF or over 120ºF or exceed operating pressure of 80 psi.

Testing the Unit:

- Turn on cold water supply to the unit and open the Tru-Pure faucet to purge air from the system.
- Confirm that the green light illuminates after a few seconds.
- If Green LED on unit does not illuminate, confirm that power is ON. If the power indicator still does not light and power is on, **inspect** resettable fuse on the side of the unit.

WATER SYSTEMS
Troubleshooting

Water system problems are generally caused by improper use or lack of attention. Improper winterizing, poor maintenance, road vibration and campsite water pressure variations are common culprits of water system failure.

Check all plumbing connections for leaks at least once a year. If the water pump runs when a faucet is not open, check for a water leak. Close drain valves. If the pump continues to run, take the motorhome to an authorized dealer for service.

Disinfecting Fresh Water

Disinfecting the water system with household bleach (super chlorination) protects against bacteriological or viral contamination from common water sources.

When to disinfect the fresh water system:

- If the motorhome is new.
- If the motorhome has been in storage.
- Every three months during use.

To Disinfect the Water System:

1. Remove water filter elements and re-install the filter housings.
2. Drain the fresh water tank. Close drain when done.
3. Prepare a disinfecting solution using one of the following methods.
   - Combine one gallon of water and ¼ cup of household bleach. Use 1 gallon of this solution for every 15 gallons of tank capacity.
   - Multiply tank capacity (in gallons) by 0.13. The result is the amount (in ounces) of household bleach to pour into fresh water tank. These methods will yield a 50 PPM (parts per million) disinfecting solution in the water system that will act as a quick-kill dosage for harmful bacteria, viruses and slime-forming organisms. Concentrations higher than 50 PPM may damage the water lines and/or tanks.
4. Pour the solution into the gravity fill opening.
5. Top off tank with fresh water.
6. Turn on the water pump in the motorhome.
7. Open each faucet and run the water until you smell a distinct bleach odor.
8. Turn off all faucets and allow the system to stand for four hours.
9. Drain the fresh water tank of the mixed solution.
10. Fill the water tank with fresh water. Thoroughly flush hot and cold lines with fresh water. Repeat this process until the chlorine bleach smell is no longer detectable in the water system.
11. Install new water filters.

INFORMATION:
Household bleach is 5.25% Sodium Hypochlorite. Higher concentration will increase PPM Ratio.

CAUTION:
If not properly and thoroughly rinsed, chlorine bleach or other concentrated chlorine bearing chemicals can cause failure to the Aqua-Hot Domestic Water Loop (copper tubing).

The Aqua-Hot copper tubing is rated for use with fresh water and winterizing solutions only. Periodic flushing with other common household chemicals, including bleach, will have little or no effect on the product if properly rinsed with the fresh water afterwards. Failure of copper tubing, especially soft or flexible copper, can result if materials other than water or winterizing solutions are allowed to reside inside the piping for extended periods of non-use. The most common cause for failure is due to an extended exposure to chlorine, solutions containing chlorine (i.e. bleach) or hydrochloric acid.

CAUTION:
Do not use vinegar to disinfect the water system. Vinegar will deteriorate the copper tubing inside the Aqua-Hot Domestic Water Loop.

FAUCETS

The kitchen faucet head has a flexible hose allowing the faucet head to be removed from the base. O-rings seal the faucet head to the base preventing water from dripping into the cabinet. Push the slide bar to select either stream or spray.

Should the flow of water reduce, the filter screen in the faucet head may be clogged. Fresh water sources will vary by location. Build up of lime deposits, or debris on the faucet screen, will restrict or plug the flow of water coming from the faucets. All faucet screens should be checked and cleaned every two weeks of use.

To clean faucet screens:
- Unscrew kitchen-screen retainer from faucet head.
- Lavatory/vanity - remove threaded collar from faucet outlet.
- Clean screen using a small soft brush, if necessary, and a de-liming solution.
- Install screen and check water flow.

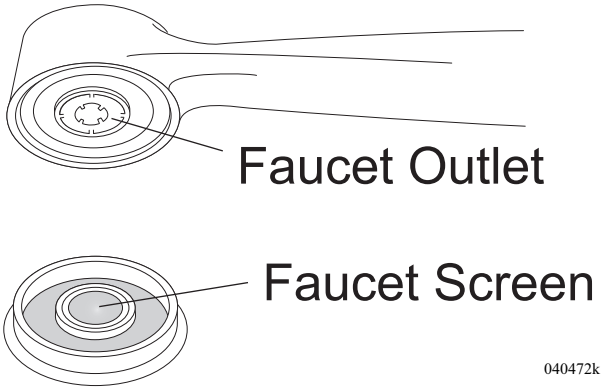

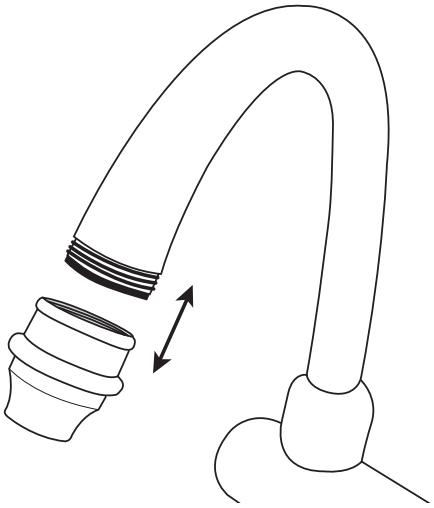

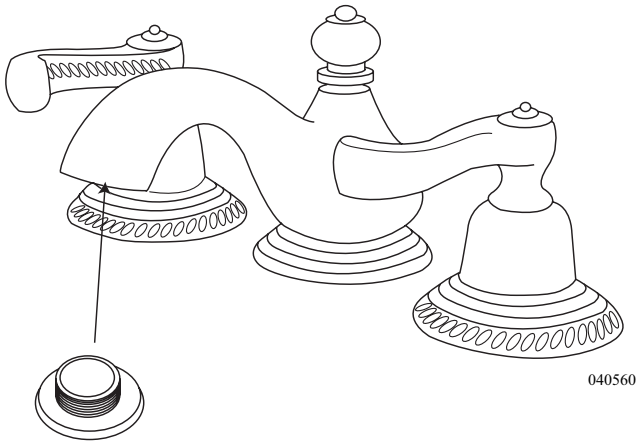

Liquid Soap Dispenser:

The liquid soap/lotion dispenser can be used with any type of liquid soap or lotion. The liner of the bottle will not corrode or discolor the contents of the dispenser. To clean, use a soft cloth and blot dry. Harsh abrasive cleansers or polishes can damage the finish on the dispenser.

- Lift dispenser pump out of bottle.
- Use funnel to fill bottle with liquid soap or lotion.

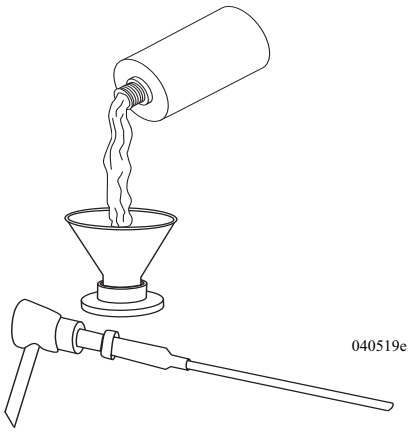

WASTE WATER SYSTEMS

Proper Waste Disposal

Dumping raw sewage from toilet holding tanks, except at authorized dumping stations, is universally prohibited. Most National, State and private parks have either a central dump facility or campsite hook-up for sewage. Many modern rest areas along the interstate now have dump stations available. Woodall's Campground Directory, Trailer Life's RV Campgrounds and Services Directory, Rand McNally's Campground and Trailer Park Guide, Good Sam Park Director (Good Sam Club), and other similar publications list dumping stations. Some major oil companies offer dump facilities at selected stations.

What Not to Put in Waste Holding Tanks

- Do not use strong or full strength detergents to deodorize and disinfect. Use odor control chemicals made especially for holding tanks.
- Automotive antifreeze, ammonia, alcohol or acetone in holding tanks will dissolve plastic.
- Do not put large table scraps in the tanks. They could stick in or damage the valve seals.
- Facial tissue is thicker, softer and stronger than a rapidly dissolving tissue. White toilet paper dissolves faster than colored. To test tissue dissolving ability, immerse one tissue square into a jar of water. Shake the jar five times to determine if the tissue disintegrates into pieces or remains in one piece. Do not use any type of tissue that remains in one piece. Paper designed specifically for holding tanks is available at most RV supply stores.

NOTE:
Never dispose of sanitary supplies or other non-dissolving items into the system. Facial tissue, wet strength tissue, paper towels or an excessive amount of toilet tissue can create clogging in the holding tank system.

CAUTION:
Do not use any products that contain petroleum distillate or ammonia in place of RV odor controlling chemicals. Petroleum distillate or ammonia will damage the ABS plastic holding tanks and seals.

What to Put in Holding Tanks

Grey Water Tank:

The grey water waste tank stores the sink, shower and clothes washer drain water. A reduced mixture of chemicals may help to control odor in the grey tank.

Ensure that there is enough liquid in the holding tanks prior to dumping the waste holding tanks to provide a smooth flow through the valve, drain pipe and drain hose. Empty the waste holding tanks weekly to prevent stagnation and overfilling.

Black Water Tank:

Before initially operating the toilet, treat the sewage holding tank with a pre-charge of water and an odor-control chemical (available at most RV supply stores). First, add approximately three gallons of water to the holding tank. Next, mix the chemicals, in accordance with the manufacturer instructions, with approximately one gallon of water. Pour mixture through toilet to the holding tank. Be careful not to spill the chemical on your hands, clothing, toilet bowl or carpet. Hot weather conditions may require adjusting the amount of chemical used to control odor. Repeat the chemical pre-charge to the holding tank each time the tank is cycled.

WARNING:
Most chemical mixtures for holding tank odor control are poisonous. Follow the product manufacturer's directions and warnings when using holding tank additive. Do not use any products that contain petroleum distillate or ammonia in place of RV odor controlling chemical. Petroleum distillate or ammonia will damage the ABS plastic holding tanks and seals.

Waste Drain & Sewage Tanks

The waste drain system provides adequate and safe storage and/or discharge of waste materials. The drain system uses ABS plastic piping and fittings connected to sinks, shower, toilet and holding tanks draining to an outside termination. The motorhome should be reasonably level for optimum operation of the waste systems. The wastewater holding system consists of a grey water tank that stores the sink, shower and laundry washer drain water, and a black holding tank that stores waste from the toilet.

Drain valves and a tank flush system dispose waste through a common termination. Each holding tank has a separate drain valve dumping the waste water (grey water) and sewage (black water) through a common single discharge outlet. The tank drain valves are located in the service center on the roadside. Use the Aladdin™ System to monitor tank levels. When ready to drain the tanks, drain the sewage tank first. Next, flush the black tank with the flush system. Close black tank valve after flushing tank. Drain the grey water tank. Using this sequence helps to flush solids from the sewer hose. When traveling, it is recommend both holding tanks be empty or less than half full.

Waste Drain Hose

A flexible three-inch sewer hose attaches between the termination drain and the shore facility. The termination drain is adjustable and should be periodically exercised. Sewer hoses usually come in 10 or 20 foot lengths. The sewer hose is stored in a tube accessed through a door on the roadside next to the rear tire. The shore fitting for the sewer hose may be a three or four-inch, male or female thread pipe; or a four-inch pipe with no threads, covered by a metal plate. Different style of adapters are available to fit most configurations. Hose ladders may also be purchased to support the hose.

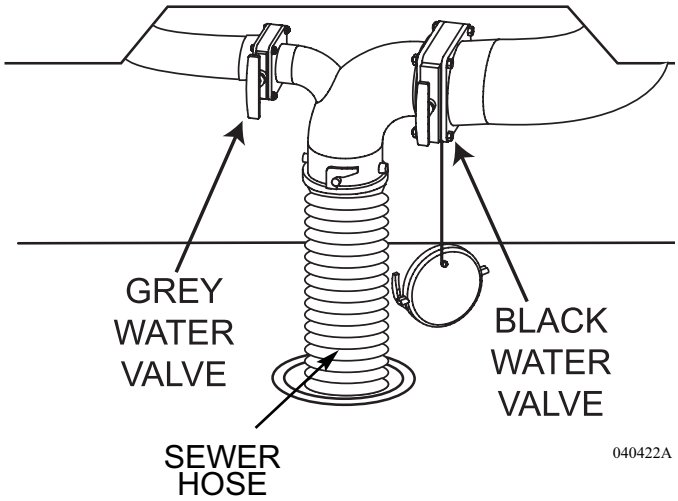

Plumbing Service Center on roadside

It is important that the hose remains secure. **Always tighten clamps and restraining devices before use.** Lay the hose inline between the termination outlet and the shore fitting. Restrain the hose to prevent movement during use. Wear protective and/or disposable gloves when handling the sewer hose.

To Exercise the Termination Drain:

- Grasp the drain firmly on both sides of the drainpipe.
- Swivel the pipe up and down several inches to exercise the internal O-rings.
- The drainpipe may be left in the upward position to prevent residual material from leaking out.

To Attach the Hose:

- Remove sewer hose from carrier.
- Remove termination cap. Align coupler tangs with termination tabs. Twist coupler clockwise 90º locking coupler to termination outlet.
- Unscrew the access deck plate and feed the drain hose through the opening.
- Rotate the drainpipe downward for maximum flow.
- Attach the other end of the hose to the drain service. Restrain hose to prevent movement during use.
- Open the (small) grey water valve.

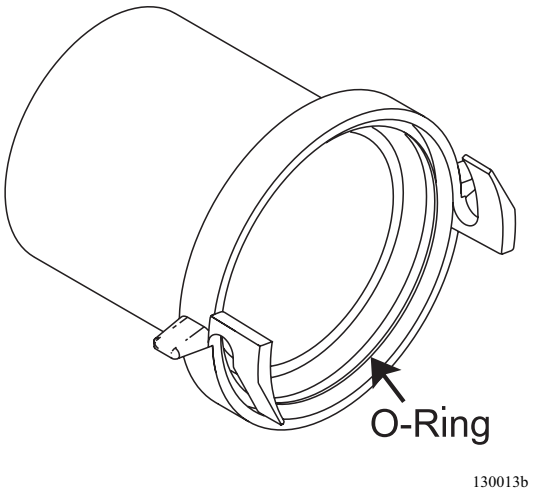

Hose adapter clamped to end of sewer hose.

The black water valve remains closed until the tank is full or until time of departure to help prevent clogging. Use the outside faucet or shower attachment for washing or rinsing the sewer hose after dumping the black tank.

LUBE:
Lubricate the O-ring on the sewer hose adapter periodically with silicone spray.

NOTE:
Close the grey water valve 24 hours prior to departing to allow the tank to fill with liquid to help in the dumping process.

NOTE:
Use care when connecting the sewer hose adapter to the termination outlet in cold weather.

Tank Flush

The motorhome comes equipped with a power flush nozzle, located in the black and grey tanks to help reduce solid build-up. Flush the tanks each drain cycle. Failure to thoroughly rinse the tanks may result in accumulated solids and clogged spray nozzles.

Dumping the Tanks:

1. When preparing to dump the black tank, first close the grey water valve.
2. Fill the grey tank to at least 50% by running water in the shower or sinks.
3. Use the Aladdin™ system to observe tank fluid levels. When the grey tank is 50% full, stop filling the tank.
4. Open the black water valve. Allow the black tank to drain.
5. Connect a non-potable water hose, with pressure regulator, to the flush system fitting located in the service center.

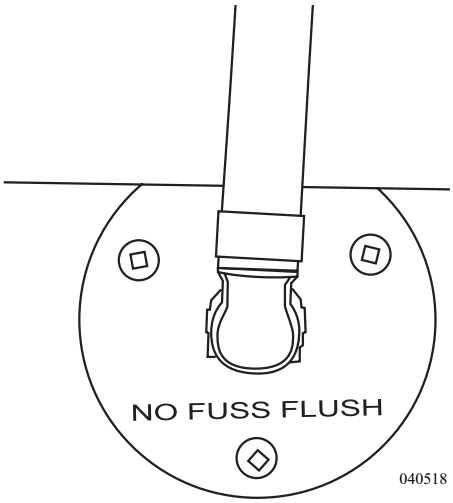

Connection in curbside compartment behind water bay

6. Turn on the faucet and allow water to rinse the black tank at least three minutes. Never operate the system unattended. Ensure the water flows freely though the sewer hose.
7. When completed, turn off the faucet and close the black water valve.
8. Open the grey water valve. The water in the grey tank will flush remaining solids from the sewer hose. With the grey valve open, use the grey tank valve to flush the grey tank. The grey valve remains open until the next drain cycle, or time of departure.

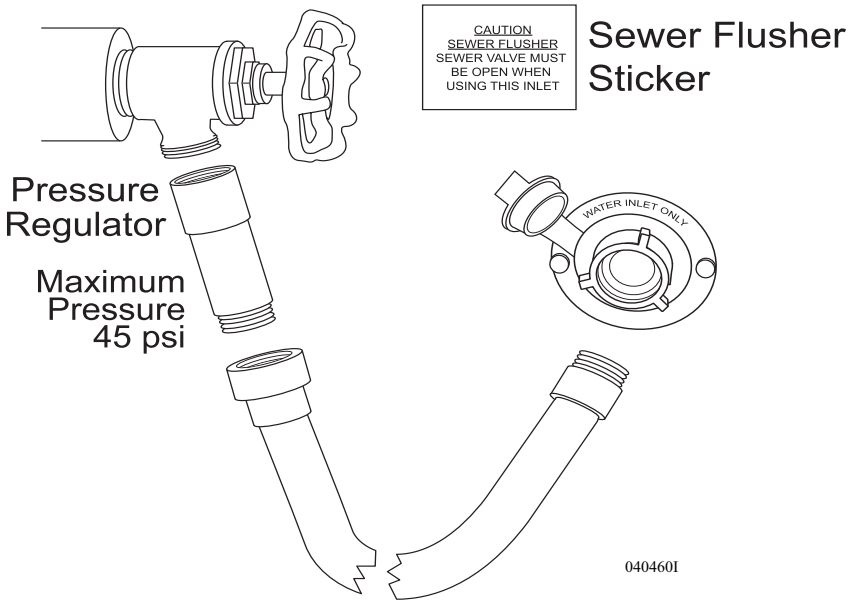

WARNING:
Never operate the flush system unattended. Flooding may occur. Use the tank flush system each time the holding tanks are cycled. Failure to routinely use the flush system will result in a clogged spray nozzle. Turn off the water supply when finished flushing the tank.

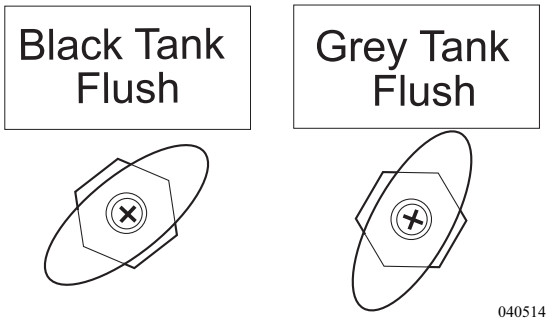

9. When preparing for travel, close both black and grey valves. Undo restraining devices from the sewer hose. Disconnect the sewer hose from the termination outlet by rotating the fitting counterclockwise 90º.
10. Drain the sewer hose using hand over hand method working the sewer hose towards shore fitting. Rinse the sewer hose with outside facility and repeat the hose drain process.
11. Remove the sewer hose from shore fitting. Install sewer hose in carrier and lock door. Secure the termination cap (required by law in some states).
12. If desired, add chemicals to the tanks to control odor. Follow the directions given by the manufacturer of the chemical.

NOTE:
Dump the black tank before driving.

WASTE PUMP (Optional)

The waste pump is a self-priming impeller pump designed to minimize clogging when draining the tanks. The system comes with a 1-1/2" outlet hose with sewer pipe adapter and a 13 gallon per minute macerator pump.

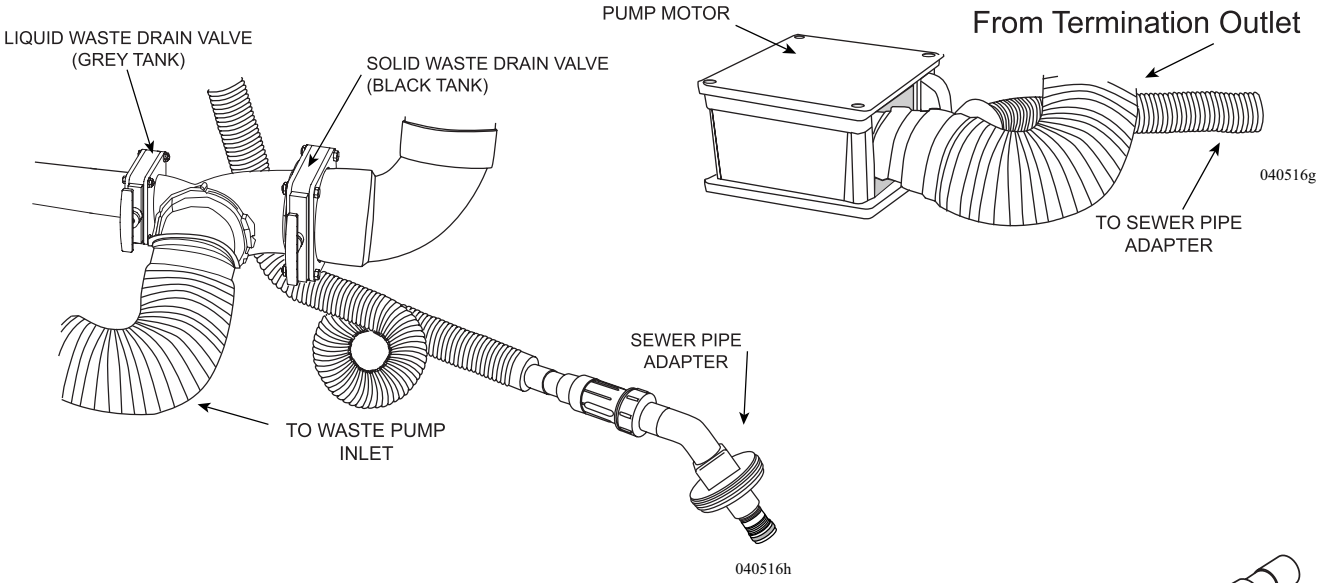

To Empty the Black Tank:

- Ensure the 3" flexible hose from the macerator pump to the termination point on the dump connection is secure.
- Remove drip cap at bottom of sewer pipe adapter.
- Insert adapter into sewer connection.
- Open the solid waste drain valve at the plumbing service center by pulling outward. Turn on the pump using the switch on the service center panel.
- When the black tank is empty, turn off the pump and leave the black tank valve open.

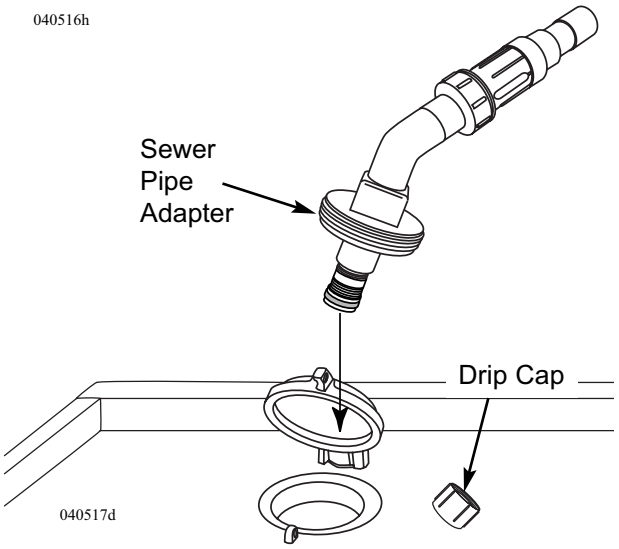

Inserting sewer pipe adapter into sewer connection.

To Rinse the Black Tank:

- With the black tank valve left in the open position open the grey tank valve. This will allow half of the grey tank liquid to flow into the black tank. Gravity will equalize the volume in the tanks in a few moments.
- Close the grey valve and turn the pump back on to rinse the black tank. This process may be repeated to rinse the tank again.

To Empty the Grey Tank:

• With sewer attachment installed open the grey tank valve and turn on the pump.

Grey Water Bypass:

The grey water bypass system allows continuous grey water flow during stays at parks with sewers at the site. The liquid (grey) waste uses gravity to drain from the tank and bypasses the pump by going through the bypass hose into the parks sewage service. The bypass hose is the small garden-sized hose connected at the termination point of the dump valves and "T-s" into the small flexible hose on the outlet side of the macerator pump.

To Use the Grey Water Bypass:

• With the 3" flexible hose connected at the termination point of the liquid and solid waste drain valves and the sewer pipe adapter attached to the facilities sewer system, open the grey tank drain valve.
• Ensure the sewer pipe adapter is in sewer connection.
• Open the grey water bypass valve where the garden hose fits into the bottom of the connector at the termination point on the liquid and solid waste drain.

Troubleshooting:

• For the macerator pump to run the chassis battery disconnect switch in the engine compartment needs to be on.
• 12 Volt DC power for the macerator pump comes from the chassis batteries and is protected with a 20 Amp fuse located on the rear run box at the curb side of the engine compartment R4 Circuit Board.

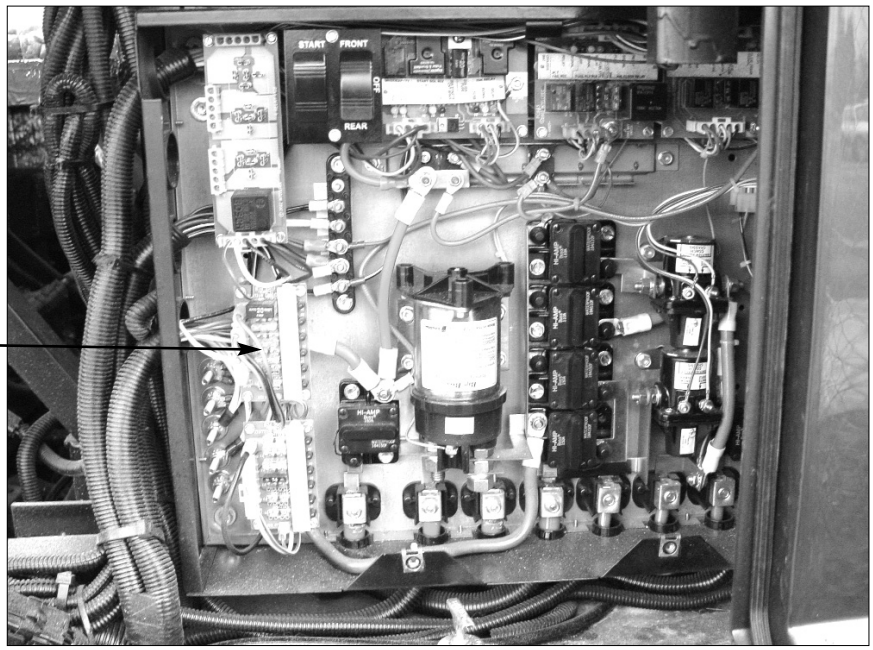

RearRunBox.tif

Rear Run Box in engine compartment

The toilet uses water from either the fresh water tank or a city water supply. The water pump must be turned on or connect the motorhome to city water. The toilet uses 12 Volt DC to flush. The toilet flushes directly into the sewage holding tank (black water).

To Add Water to the Toilet:

Lift the flush lever until the desired water level is obtained. Generally, more water is required when flushing solids.

To Flush the Toilet:

Momentarily push the lever down. Holding the lever down will not increase flush time or water flow. The flush cycle is a timed event controlled by a micro-processor. Water pressure and flow rates vary with location. It may be necessary to adjust the water level.

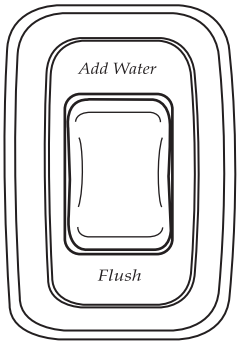

040572

Toilet with wall mount flush switch:

- Press and hold the switch to the Add Water position until desired water level is reached.
- Press switch to Flush position and release to flush.

NOTE:
The toilet requires 12 Volt DC to operate. Low voltage will cause toilet malfunction or failure.

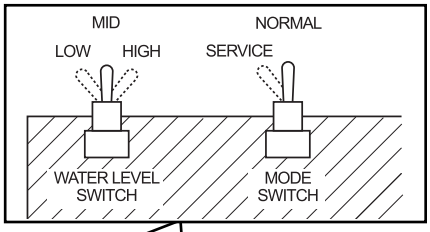

Lift the lid to access the control switches.

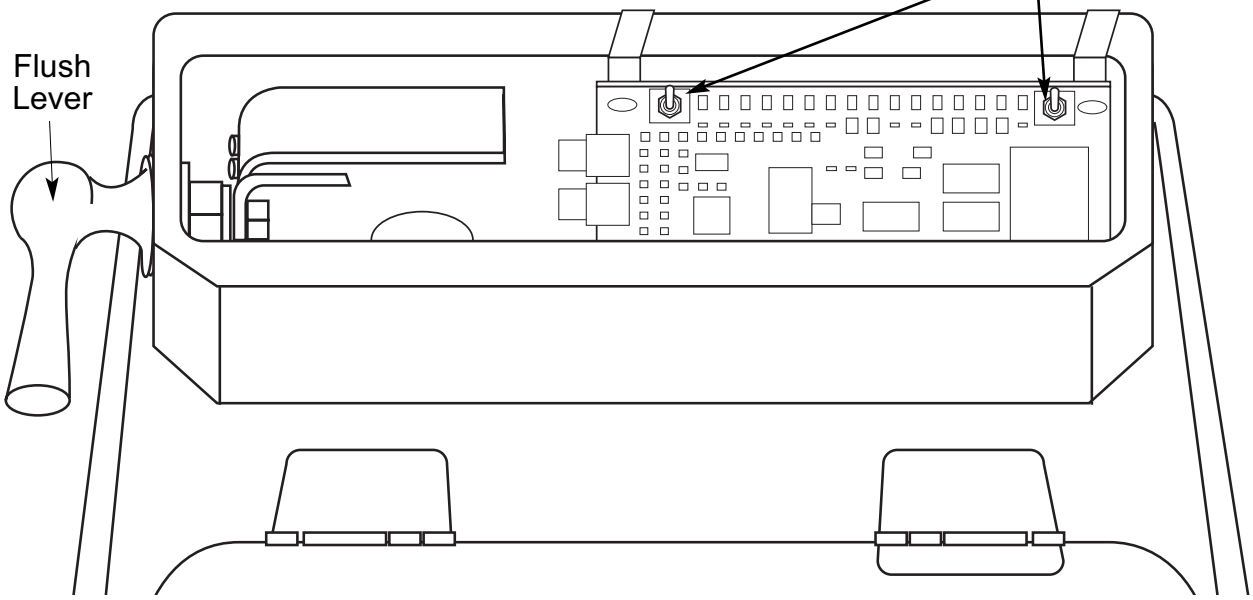

040449c

Control Switches:

1. Water Level Switch:

Adjusts the water level in the bowl after the flush cycle.

NOTE:
Setting the Water Level switch to High increases water consumption and may produce water spill during travel.

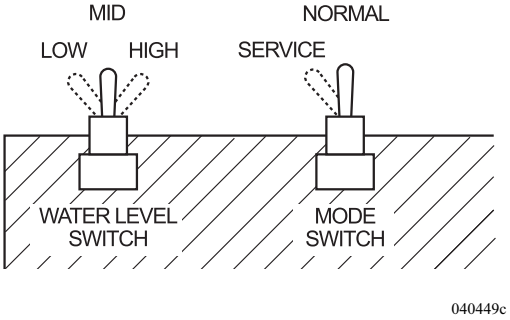

2. Mode Switch:

Pushing the switch to Service will hold the ball valve open. This feature is useful when adding chemical to the sewage tank.

CAUTION:
To prevent accumulation of solids below toilet, add several gallons of water to the holding tank before use. Most chemical mixtures for holding tank odor control are poisonous. Follow the product manufacturer's directions and warnings when using any holding tank additive.

NOTE:
Never dispose of sanitary supplies or other non-dissolving items into the toilet. Facial tissue, wet strength tissue, paper towels or an excessive amount of toilet tissue can clog the tank or termination valve.

Cleaning & Maintenance

The toilet should be cleaned regularly for maximum sanitation and operational efficiency. Clean the toilet bowl with a mild bathroom cleaner. Do not use chlorine or caustic chemicals, such as drain opening types, as they will damage the seals.

Clean the toilet system using the tank flush. If additional flushing is desired, flush with several gallons of fresh water and one cup of dry laundry detergent. Add odor control deodorant, in the amount specified for your holding tank capacity, and every few days during use.

Maintenance - Checking for Leaks:

- **Back of toilet:** Check water supply line connection. Toilet tissue works well to find leaks. The tissue changes texture when contacting moisture.

- **Between closet flange and toilet:** Confirm that flange screws are snug. Do not over tighten screws. If leak continues, remove toilet and check flange height. Adjust, if necessary to 7/16" above floor. Replace flange seal if damaged.

Maintenance - Bowl Problems:

- **Poor flush:** Flush should be obtained within two to three seconds. If a problem persists, adjust the water level. If problems continue, the water pressure or flow rate may be low. Remove the water supply line and check flow rate. Flow rate should be at least ten quarts (9.5 liters) per minute. Water pressure should not be below 25 psi.
- **Bowl will not hold water:** Check for foreign material in ball valve.

NOTE:
If the motorhome is in storage for six months, it is a good idea to spray silicone on the ball valve. Perform this maintenance monthly (silicone will evaporate in about 30 days). Do not use a petroleum-based lubricant, damage to the seals will occur.

Drain Traps & Auto Vents

Sinks, shower and clothes washer drains incorporate a water trap (P-Trap) and auto vents to prevent waste water holding tank odor from entering the motorhome.

Drain Traps:

P-Traps are usually within 54" of a vent tee and must contain water to block odors. During storage, water can evaporate and allow odor into motorhome. If odor is detected, run water into sinks, shower and clothes washer to fill P-traps.

AutoVents:

The auto vent is designed to assist in the smooth flow of water in the drain without creating a vacuum.

The auto vent, if stuck in the open position, can allow grey odors to enter the motorhome. Some auto vents can double as "clean outs" in the event the line needs to be snaked out.

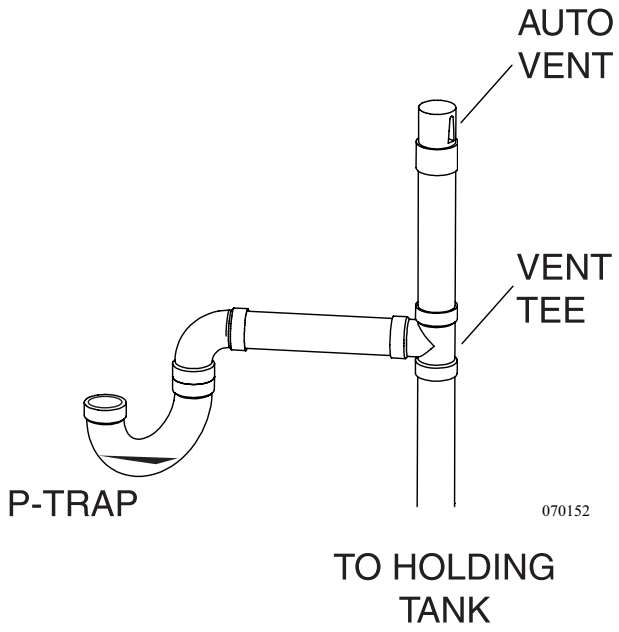

COLD WEATHER CONDITIONS

A motorhome is not designed for extended use in below freezing (32° F/0° C) weather. However, you may not experience any problems as long as the temperature does not drop too low. Interior water lines, fixtures, water storage tanks and pumps are normally protected from moderate freezing temperatures, as long as the Aqua-Hot is operating. Exposed drains may freeze quickly. If in doubt about what temperature the motorhome will tolerate, winterize with potable antifreeze.

Cold Weather Storage

If the motorhome is stored where freezing temperatures may occur, drain the domestic fresh water loop. Drain the fresh water tank by opening the fresh tank drain valve in the plumbing service center.

NOTE:
Icemakers, water filters, water purifiers and the Aqua-Hot all use domestic water and should be drained and stored in accordance with the manufacturer's recommendation for winterization.

WINTERIZATION

The fresh and waste water systems require winterization when the motorhome is placed in storage. Two separate methods that may be used, or combined, to winterize are use of compressed air to evacuate all liquids and/or antifreeze to replace all liquids.

The recommended method of winterizing is using air pressure to remove liquids that may freeze and cause damage to the various systems and appliances. The lines can then be left empty, or filled with an FDA approved RV antifreeze. When plumbing lines are drained, antifreeze is not necessary, and the decision to use antifreeze is left to the motorhome operator.

NOTE:
ONLY FDA approved RV antifreeze should be used to winterize the water systems in the motorhome.

Access to an air compressor, and an adapter to connect the air line regulator to the water system, will be necessary. Air adapters used for winterizing are available at RV supply locations. When attached to the water lines, air pressure should not exceed 40 PSI. Higher pressure can damage the lines.

1. Empty and flush the holding tanks.
2. Drain the fresh water tank by opening the drain valve located inside the water service center of the motorhome.
3. Open hot and cold low point drain valves in manifold bay. Let all the water drain.

CAUTION:
Neglecting to winterize the Aqua-Hot during freezing temperatures, will result in serious damage to the domestic hot water heating system of the Aqua-Hot. Vehicle Systems recommends winterizing the Aqua-Hot domestic water loop with RVA approved antifreeze. Instructions for this procedure can be found in the Aqua-Hot owner's manual.

4. Locate filters in bay. Remove filters, replace canister and re-install filter bowls. Remove optional Ozone Water filters in same manner.

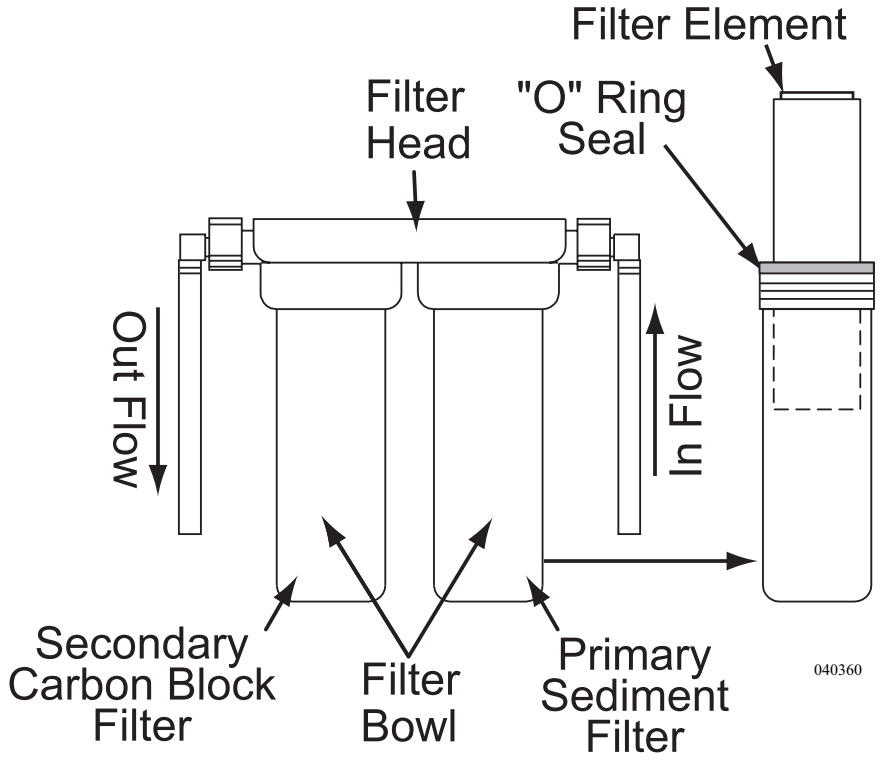

Filters located in curbside Water bay

5. Connect an air hose with regulator to the city/fresh water fill connection, with valve positioned for city water. Set regulator for 40 psi and turn on air. (Air adapters for winterizing are available at RV supply locations.)
6. When water stops flowing from the drain valves, open and close the faucets one at a time, hot and cold, until only air comes out. Do not forget the toilet and any outside faucets.
7. Hold the toilet flush mechanism open until the water has stopped running.
8. Disconnect the air hose with adapter and turn the City Water/Fresh Tank Fill valve to the tank fill position.
9. Close all valves, faucets and replace plugs.
10. One (1) gallon of FDA approved RV antifreeze is needed to protect various water drain lines in the motorhome. Pour 1 pint into both the kitchen and bath shower drains. Pour 2 pints into the bath sink drain. This will protect the P-traps, with some of the antifreeze going into grey tank to protect the drain valve. Open the valve on the toilet. Pour another 3 pints into the toilet, letting the antifreeze run into the black tank to protect the drain valve. Use a soft cloth to wipe out the sinks, shower and toilet (after the antifreeze is poured in) to protect the surfaces from stains. Pour the last pint into the washer/dryer drain.

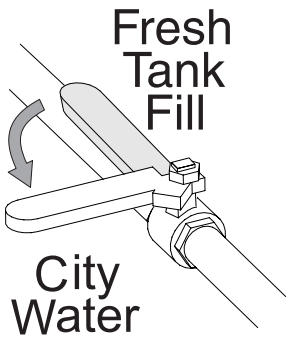

040480o

WARNING:
Ensure the water is not hot when draining the low-point drain lines. Hot water from the lines can cause burn injuries.

Using Nontoxic Antifreeze

Approximately two gallons of FDA approved RV antifreeze will be required to winterize the motorhome.

WARNING:
Use only specifically designed, non-toxic, FDA Approved RV antifreeze for potable water systems. NEVER use automobile engine antifreeze. If ingested, antifreeze can cause serious injury or death.

WARNING:
Turn off the Aqua-Hot and allow it to cool before starting winterizing procedures. Hot water can result in burn injuries. Disconnect all electrical connectors to the Aqua-Hot before winterizing.

CAUTION:
It is recommended that a qualified RV service technician familiar with motorhomes, such as an authorized dealer, perform the winterizing procedure.

Winterizing:

1. Empty and flush the holding tanks.
2. It is not necessary to blow out the lines with air. Close valve located between water pump and fresh water tank.
3. Remove water filters and re-install filter housings.
4. Close all faucets, drain valves and low point drains.
5. Turn winterizing valves at the inlet side of the water pump to the Winterize position. Set the winterizing tube into the container of non-toxic FDA approved RV antifreeze.
6. Turn on the pump.
7. Turn on all the faucets, one at a time, hot and cold starting with the faucet farthest from the pump. When you see antifreeze, turn the faucet off. Do not forget the toilet and all outside faucets.
8. Use a soft cloth to wipe out the sinks and shower to protect surfaces from antifreeze stains.

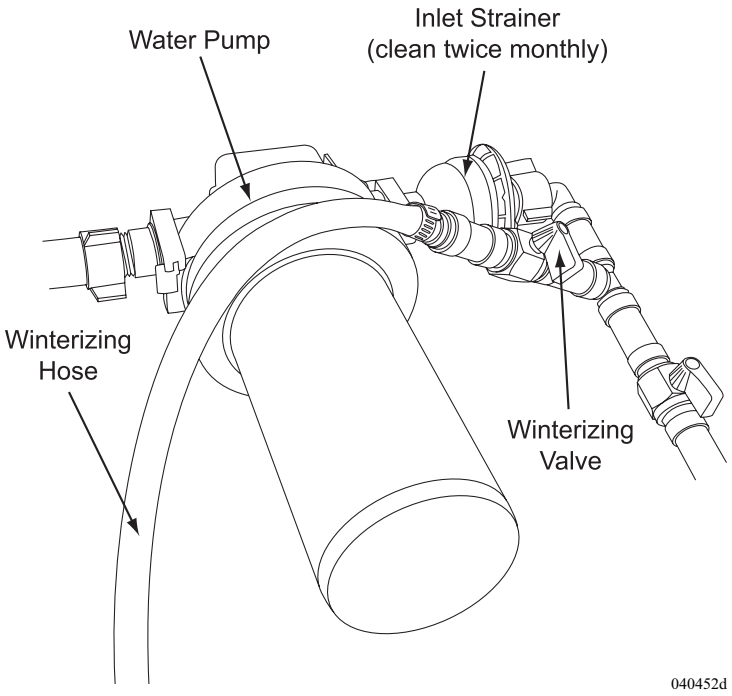

Located above the plumbing manifold access door

NOTE:
Some items such as the icemaker, washer/dryer and dishwasher require special instructions, which can be found in the specific owner's manuals.

NOTE:
Clean up spilled antifreeze immediately to prevent permanent staining.

De-winterization

To de-winterize, drain and fill the fresh tank with water. Connect the power supply line for the water pump. Operate all faucets, one at a time, until clear water is present.

CAUTION:
The first two trays of ice from the icemaker may contain contaminants. Discard and replenish the icemaker as necessary.

SERVICE CENTER

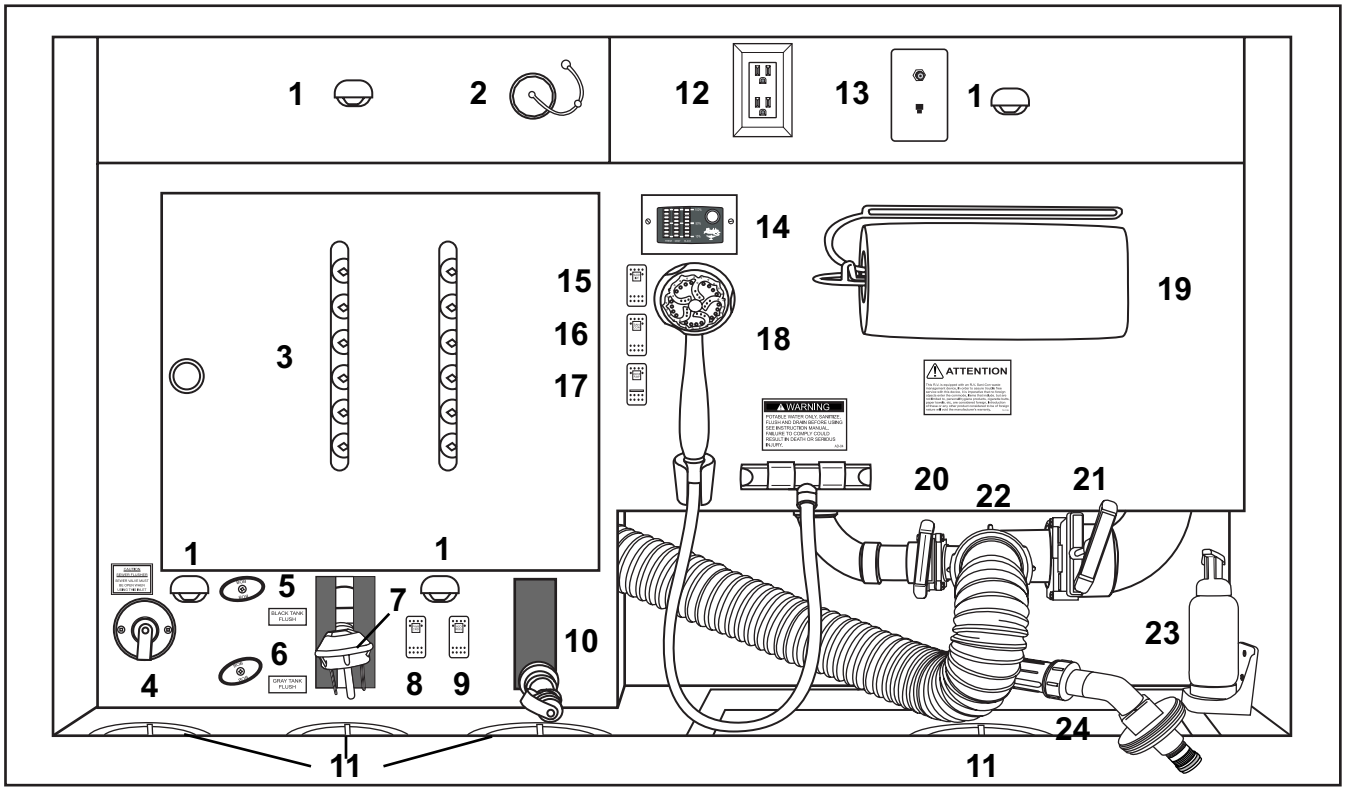

040563

NOTE:
Layout of Service Center and location of components may vary with floor plans.

1. Service Center Lights (4)
2. Fresh Water Tank Gravity Fill
3. Plumbing Access (Manifold, Water Filters)
4. Sewer Flush Connection
5. Black Tank Flush Valve
6. Grey Tank Flush Valve
7. Power Cord
8. Power Cord Reel Switch
9. Water Hose Reel Switch
10. Water Hose
11. Deck Plate (4)
12. 120 Volt Outlet
13. Cable/Phone Connection
14. Aladdin Tank Monitor
15. Service Center Light Switch
16. Sanicon Waste Pump Switch
17. Water Pump Switch
18. Exterior Shower
19. Towel Bar
20. Grey Tank Dump Valve
21. Black Tank Dump Valve
22. Termination Outlet
23. Soap Dispenser Holder
24. Sanicon Sewer Pipe Adapter

WATER BAY (Typical)

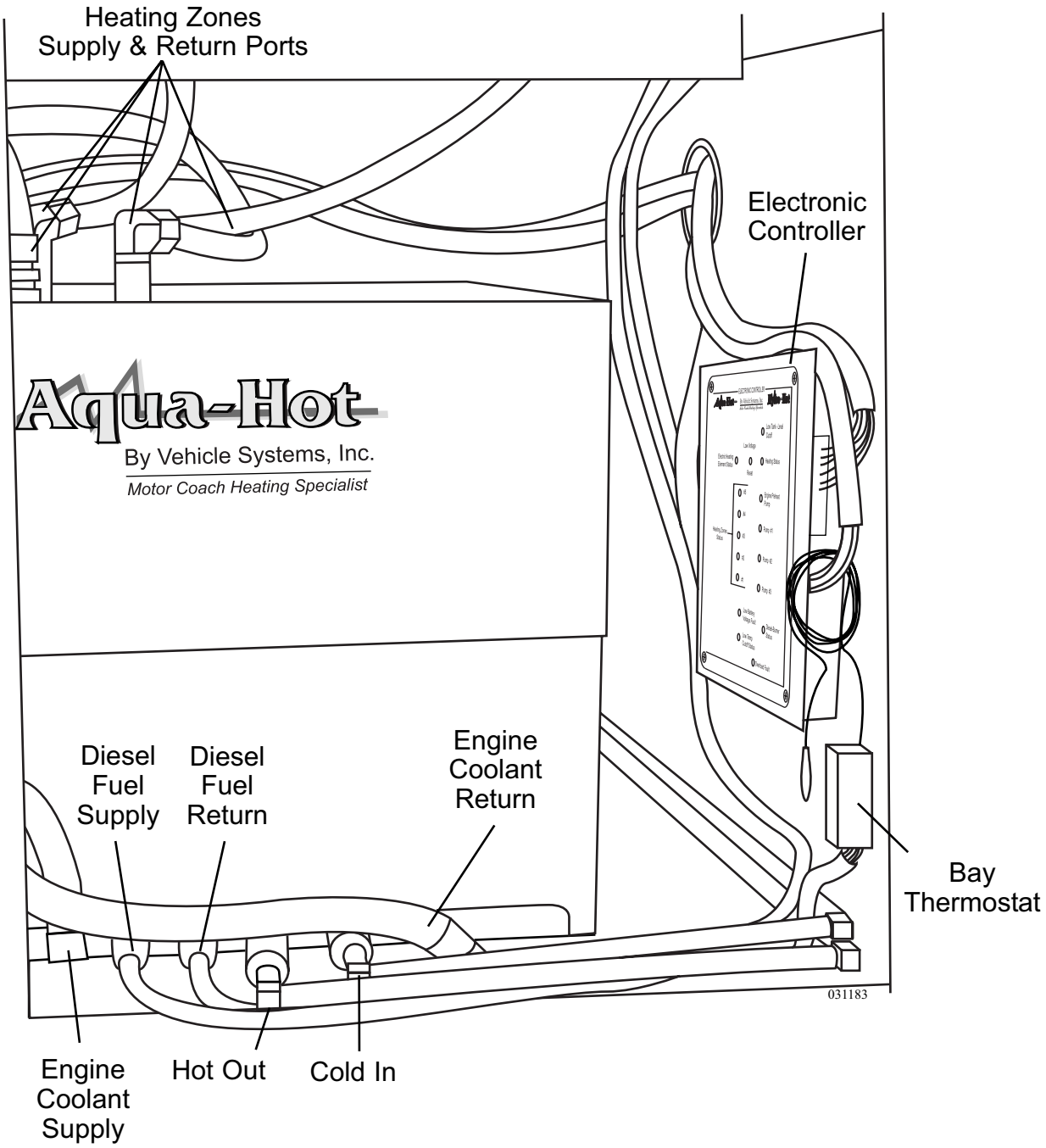

NOTE:
Layout and location of Water Bay and its components may vary with floor plans.

WATER SYSTEM DIAGRAM

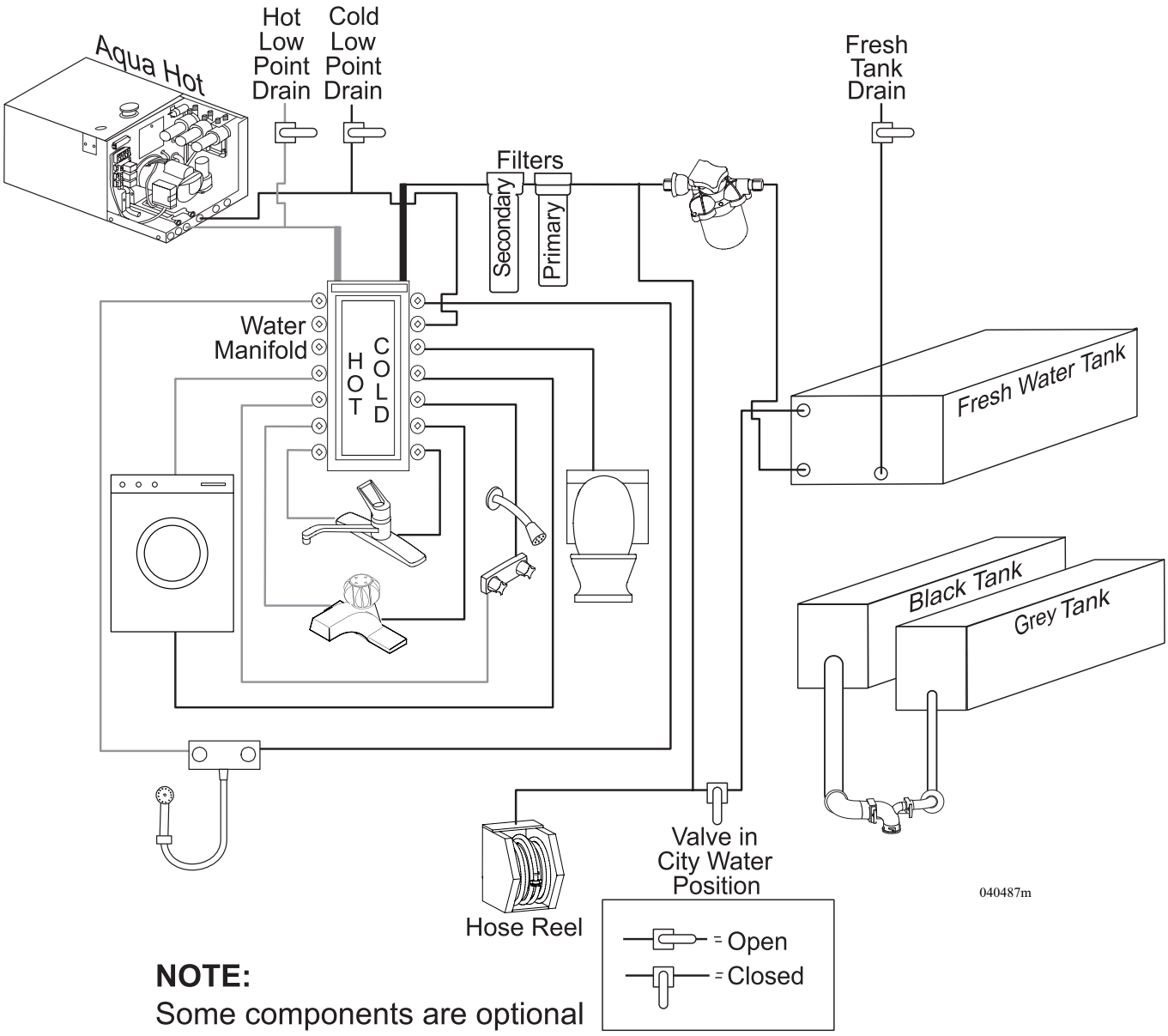

Typical Water System Layout

~ NOTES ~

~ NOTES ~

Signature 2005

LP-Gas Systems ▪ Section 7

LP-GAS SYSTEMS **301**
LP-GAS DETECTOR **302**
Testing 303
Alarm 303
Maintenance 305
LP-GAS EMERGENCY PROCEDURES - CHECKLIST **305**
LP-GAS TANK **306**
Measurement 306
Tank Capacity 306
Tank Filling 306
Tank Operation 309
LP-GAS FUNDAMENTALS **310**
LP-GAS REGULATOR **311**
LP-GAS HOSE INSPECTION **313**
LP-GAS DISTRIBUTION LINES **314**
LP-GAS CONSUMPTION **315**
LP-GAS SAFETY TIPS **316**

This section contains safety information and operating instructions of the Liquefied Petroleum Gas (LP-Gas) system and related equipment in the motorhome. Some items discussed may not be applicable to all motorhomes. More detailed information with **CAUTION** or **WARNING** instructions for various equipment other than items within this section, can be found in the equipment manufacturer's manual in the owner's information box.

The LP-Gas tank mounted in the motorhome contains LP-Gas that is under high pressure. As fuel is used, the liquid vaporizes and passes through the primary tank valve to a regulator that reduces pressure. Low-pressure gas is then distributed to components through a pipe manifold system.

Component lighting problems are commonly caused by air in the manifold system or incorrect gas pressure. Do not attempt to adjust the regulator. Adjustments must be made by a dealer or an authorized service person with the proper equipment. In higher elevations or extreme cold weather (10° F/-12° C or lower) a shortage of LP-Gas may be experienced. If LP-Gas is going to be used in higher elevations or cold climates for a long period of time, have an authorized service person adjust the LP-Gas regulator for these conditions.

Have the LP-Gas system tested by an authorized dealer or service center at least once a year and before every extended trip. The test will include having the system checked for leaks and the regulator pressure checked and tested for functionality. Although the manufacturer and the dealer test the system carefully for leakage, travel vibrations can loosen fittings.

WARNING:
When storing portable LP-Gas tanks that are not connected to an LP-Gas system, install an approved plug in the tank outlet hole to prevent leaks. Do not store or transport empty LP-Gas tanks, portable tanks, gasoline or other flammable liquids in the interior area of the motorhome. Keep open flame and spark producing materials away from the LP-Gas area. Shut off all appliances and the primary LP-Gas tank valve when the motorhome is in storage. If this warning is ignored, a fire or explosion could result.

Leaks (identified by the odor of rotten eggs or sulfur) can be easily found by applying a leak detector solution on all connections. Never light a match, have an open flame or use any spark producing equipment or appliance to test for leaks. Leaks can usually be repaired by tightening the fittings. If not, shut off the primary gas valve at the tank. Hand-tighten the primary valve only. Do not use a wrench or pliers as over tightening may damage valve seats and cause leaks. If a leak is suspected, immediately see an authorized dealer or service center for repairs.

WARNING:
LP-Gas is highly volatile and extremely explosive. DO NOT use matches or a flame to test for leaks. Only approved LP-Gas leak testing solution for leak detection should be used. Unapproved solutions can damage copper tubing and brass fittings. A liquid dish soap solution of 10 parts water may be used. Shake the solution until bubbles form and then apply the mixed solution to fittings and accessory control valves. All fittings tested should be thoroughly rinsed and dried after testing. Never attempt to adjust LP-Gas regulators. Only qualified service personnel should perform maintenance or repairs to the LP-Gas system.

NOTE:
It may be illegal to travel in some states and Canadian provinces with the primary LP-Gas valve open. Failure to comply with these State and Canadian province requirements may result in fines and/or pose a safety hazard.

LP-GAS DETECTOR

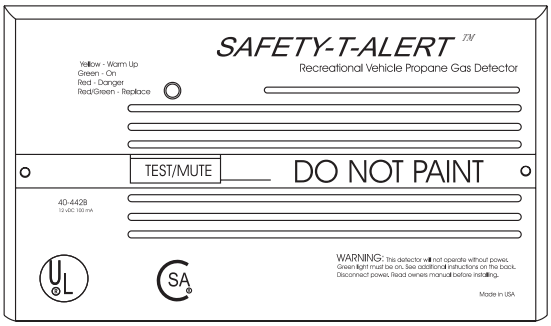

030646

The LP-Gas detector is required safety equipment in RVs. **American National Standards Institute (ANSI) A119.2 - Fire & Life Safety 3-4.8 LP Gas Detectors** states *" A LP-Gas detector must be installed in any RV that contains an LP-Gas appliance and an electrical system. The LP-Gas detector must be listed as suitable for use in recreational vehicles under the requirement of UL 1484 Residential Gas Detectors, and installed according to the terms of its listing."*

LP-Gas is heavier than air and will settle to the lowest point in the motorhome. The LP-Gas detector is also sensitive to other fumes such as hair spray, of which most contain butane as the propellant. Butane, like propane, is heavier than air and will settle to the floor level. Sulfated batteries (rotten egg odor) will also sound the alarm. When this occurs, reset the detector to stop the alert sound.

About the LP-Gas Detector:

Be aware of the difference between a leak versus LP-Gas escaping from an unlit, open burner. Pure LP-Gas vapors from a leaking pipe or fitting are heavier than air and will build up heaviest concentration at the leak and float down to mix with air. LP-Gas from open burners is intentionally mixed with air to induce burning and dissipate into the air. When mixed with air, LP-Gas becomes only marginally heavier and will expand outward. If a burner is left on, the area around the burner, range, and adjoining counter space will be combustible and can cause injury and damage if ignited. This condition will exist for an extended time period. Eventually, the LP-Gas will reach the detector's location and cause the alarm to sound.

NOTE:
The LP-Gas detector only indicates the presence of LP-Gas at its sensor. Combustible levels of LP-Gas may be present in other areas. This detector is intended for the detection of LP-Gas ONLY.

The LP-Gas detector is not designed to detect other types of gas. However, other volatile gases (nuisance gases), most of them flammable in various concentration, may cause the detector to alarm. Some products that may cause the detector to alarm are alcohol, liquor, kerosene, gasoline, deodorants, colognes, propellant used in spray cans and cleaning solvents. In some cases, vapors from glue and adhesive used in the manufacturing of the motorhome may also cause the detector to alarm for several months after the date of manufacture. If it is determined that the detector has false alarmed because of the above mentioned nuisance gases, reset the detector and ventilate the motorhome with fresh outside air.

Take precautions to ensure one of these nuisances has not masked an actual LP-Gas alarm condition. The detector draws less current than one instrument panel lamp and will operate to detect gas until the battery is drained down to 7.0 Volts. The detector must be supplied with a voltage higher than 7.0 Volts for it to operate properly. If the power source is disconnected, or if the power is otherwise interrupted, the detector will not operate.

The LP-Gas leak detector has a self-check circuit running at all times while the detector is powered. In the event that the circuitry fails, a failure alarm will sound and the operating indicator will cease to light.

LP-Gas Detector Operation:

Upon first application of power, the LED will flash yellow for three minutes while the detector is stabilizing. At the end of the start cycle the LED will turn Green, indicating full operation. If the detector senses unsafe levels of LP-Gas, it will immediately sound an alarm. The LP-Gas detector draws power from the chassis batteries, with a current draw of less than 1/10th of one amp.

CAUTION:
The detector will not alarm during the three minute warm up cycle.

Testing

Press the **TEST** switch any time during the warm up cycle, or while in normal operation. The LED should flash red and the alarm should sound. Release the switch. This is the only way the detector should be tested. The test feature checks full operation of the detector.

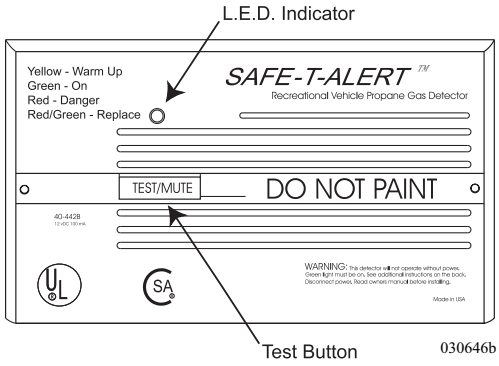

WARNING:
Test the operation of this detector after the motorhome has been in storage, before each trip and at least once per week during use.

Alarm

The **red** LED will flash and the alarm will sound whenever dangerous levels of LP-Gas or methane gas are detected. The detector will continue to alarm until the gas clears or the **Test/Mute** switch is pressed.

Alarm Procedures:

1. Turn off all LP-Gas appliances (stove, water heater, furnace, refrigerator), extinguish all flames and smoking material. Evacuate immediately, leave doors and windows open.
2. Turn off primary valve on the LP tank.
3. Determine and repair the source of the leak. If necessary, contact a qualified professional for service.

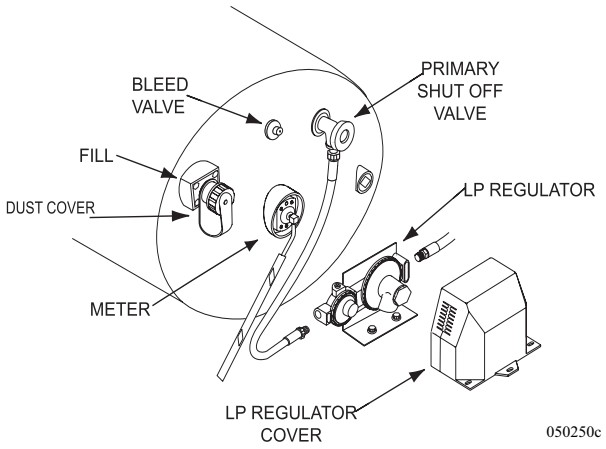

WARNING:
Do not operate any electric switch. This can produce a spark and ignite the gas.

CAUTION:
Do not re-enter until the problem is corrected.

Potential Sources of LP Gas Leaks When Operating the Motorhome:	
• Cooktop Burners • Oven • Refrigerator • Water Heater	• Defective LP-Gas Connection • Defective Regulator • Portable Propane Powered Appliances/Accessories • Furnace

Alarm Mute:

Press the **Test-Mute** button when the detector is in alarm.

1. The **red** LED will continue to flash and the alarm will beep every 30 seconds until the gas level has dropped to a safe level.
2. The LED will flash **green** until the end of the **Mute** cycle.
3. If dangerous gas levels return before the end of the **Mute** cycle, the alarm will beep four times and return to phase 1.
4. After two minutes the detector will return to normal operation (solid **green**) or resound the alarm if dangerous levels of gas remain in the area.

Fault Alarm:

Should the microprocessor sense a fault in the gas detector, a fault alarm will sound twice every 15 seconds. The LED will alternately flash **red to green** and the **MUTE** switch will not respond to any command. The gas detector must be repaired or replaced.

1. Vacuum the dust off the detector cover weekly (more frequently in dusty locations) using the soft brush attachment of a vacuum.
2. Do not spray cleaning agents or waxes directly onto the front panel. This action may damage the sensor, cause an alarm or cause a detector malfunction.

LP-GAS EMERGENCY PROCEDURES - CHECKLIST

If you smell gas (a rotten egg or sulfur smell) at any time, perform the following steps immediately:

- Shut off LP-Gas appliances.
- Manually turn off the primary shut-off valve at the LP-Gas tank.
- **Do not operate any electric switch**. This can produce a spark and ignite the gas.
- Open windows and doors.
- Evacuate the motorhome. Stay clear of the surrounding area.
- Keep all sources of ignition out of the area.
- Contact a qualified service technician to find the source and repair the gas leak.

WARNING:
A fire or explosion from ignited gas or gas fumes can cause serious injury or death.

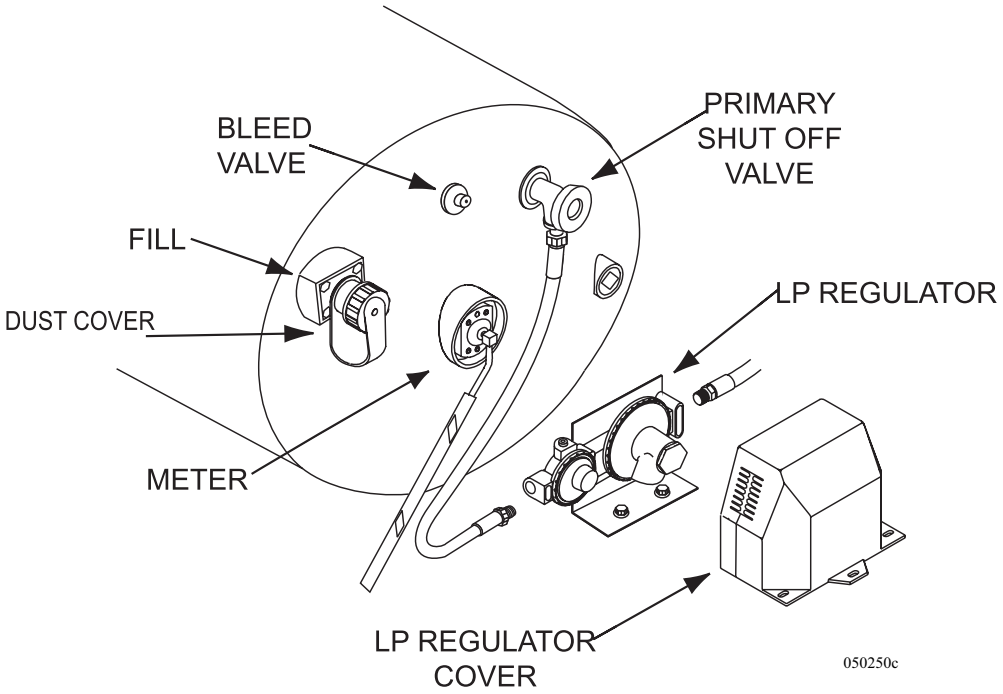

LP-GAS TANK
Measurement

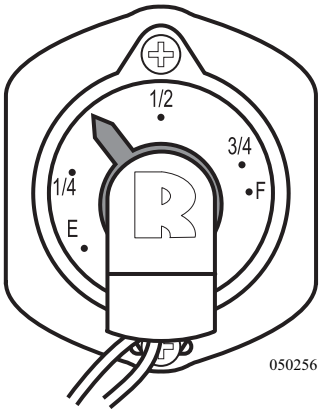

Two methods can be used to monitor the amount of fuel in the LP-Gas tank. A small gauge is located on the LP-Gas tank. This non-adjustable gauge provides a quick view of the LP-Gas level. The Aladdin™ System will also provide a percentage full reading on the **COACH TANK/MISC STATUS** screen.

Tank Capacity

LP-GAS TANK CAPACITY	
All Models	25 Gallons*

**Actual filled LP-Gas capacity is 80% of listing due to safety shut-off required on tank.*

NOTE:
This chart reflects product specifications available at the time of printing. Floor plans introduced thereafter may not be reflected in the chart. All other information contained throughout the manual will still apply.

NOTE:
LP-Gas tank capacity is estimated based upon calculations provided by the tank manufacturer and represents approximate capacity. The actual "usable capacity" may be greater or less then the estimated capacity.

Tank Filling

Woodall's Campground and Trailer Guide, and other similar publications, list refueling stations. Many travel parks sell LP-Gas. Before filling the LP-Gas tank, shut off the electric valve at the LP-Tank fill port, pilot lights, appliances and igniters to prevent a fire or explosion. Have a trained service person fill the LP-Gas tank.

WARNING:
Before entering any type of refueling station turn off all LP-Gas operated appliances. Most LP-Gas appliances used in recreational vehicles are vented to the outside. When parked close to a gasoline pump it is possible for fuel vapors to enter this type of appliance and ignite, resulting in an explosion or fire.

The LP-Gas tank fill is located in the curbside compartment. When the tank is filled to the proper level, there is space available for the conversion of liquid into gas. If a tank is overfilled, it may cause the safety valve to release pressure. When this happens, a strong rotten egg odor near the tank and/or a hissing noise may be detected.

WARNING:
It is common for small amounts of LP-Gas to escape and evaporate during the fueling process. Protect bare skin. Instant freezing will occur if exposed to LP-Gas.

LP-Gas exists in both liquid and vapor form within the tank. A "Full" tank is approximately 80% liquid. The pressure inside the tank varies with the temperature of the liquid. All tanks are required to be equipped with a safety pressure relief device. The purpose of the safety valve is to release excess pressure. When the tank is full, the gauge on the tank will only read ¾ full. The monitor panel is adjusted to indicate “full” at this point.

WARNING:
Turn off pilot lights and all appliances while filling the LP-Gas tank to prevent a fire or explosion.

WARNING:
Extinguish all sources of heat, sparks, flames and smoking materials within a 50' radius during the fueling process.

NOTE:
Actual full liquid capacity is 80% of full tank capacity.

NOTE:
If the tank is new and being filled for the first time, inform the service technician to purge any air from the tank before filling.

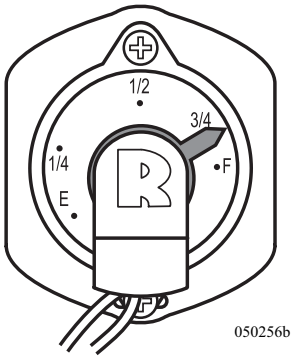

LP Tank Gauge: Located on tank.

Tank Filling Procedures:

1. Turn off pilot lights, all appliances and the engine. Close all vents, doors and windows to prevent vapors from entering the motorhome.
2. Remove dust cover. Screw the fill nozzle to the fill valve.
3. Turn on dispensing pump, then open the 80% bleed valve.
4. Open the dispensing valve on the fill nozzle and dispense liquid into the tank.
5. Close the dispensing valve on fill nozzle as liquid just begins to expel from the 80% bleed valve. The overfill protection valve prevents filling the tank to more than 80% of the rated capacity.
6. Close the 80% valve and shut off the dispensing pump.
7. Open the high-pressure bleed valve on the fill nozzle to remove pressure between the dispensing pump and fill nozzle. Remove nozzle from the fill valve.
8. Install the dust cover.
9. LP-Gas appliances (especially the refrigerator) may have difficulty starting after a period of non-use. To speed the process of supplying fresh fuel to the appliances, light the stove first.

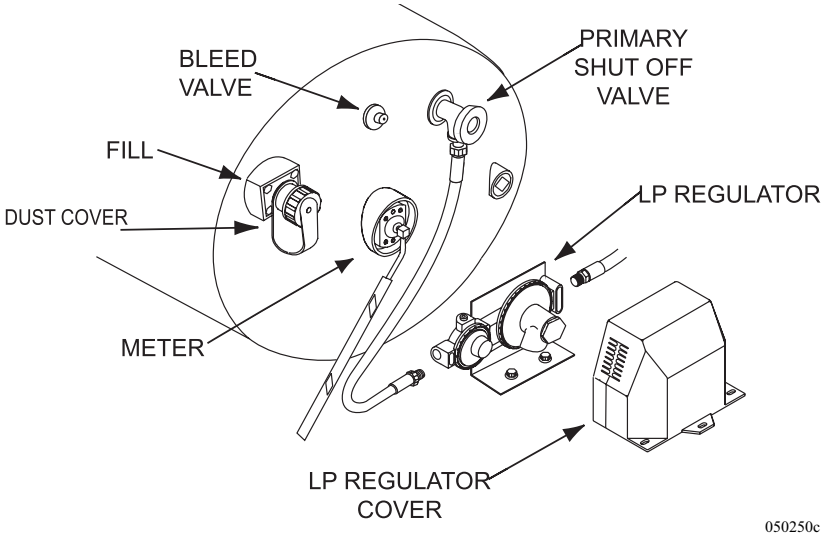

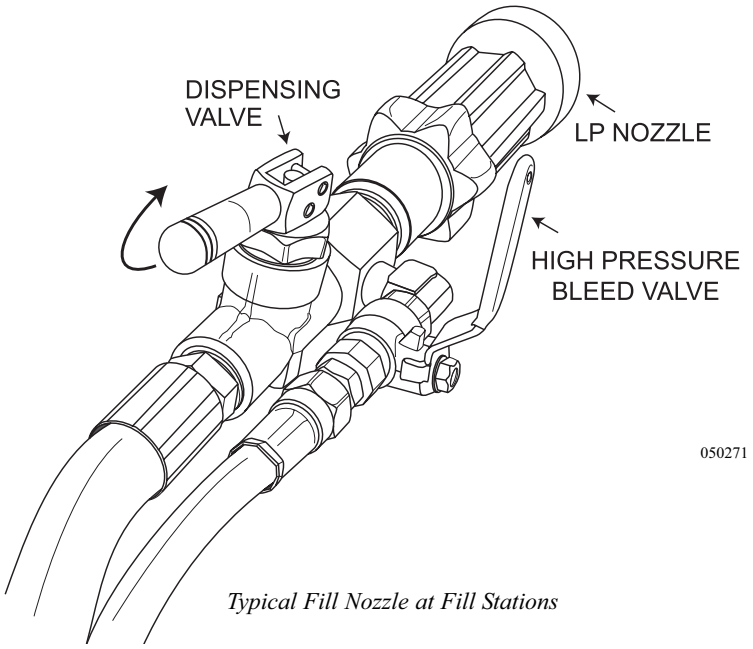

Typical Fill Nozzle at Fill Stations

<u>CAUTION:</u>
Pressure inside LP-Gas tanks can reach over 200 psi when exposed to direct sunlight. A high-pressure safety relief valve will purge excess high pressure, if necessary. LP-Gas will stop vaporizing as the LP-Gas tank temperature approaches -44º F.

- Manually open the primary shut-off valve located on the LP-Gas tank.
- Turn off the primary valve on the LP-Gas tank when the tank is being filled, when driving, in between trips and when in storage.
- Hand-tighten the primary valve only. Do not use a wrench or pliers, as this will over-tighten the valve.
- The primary valve is designed to be closed by hand, over-tightening may permanently damage the valve seat.

NOTE:
In some States and Canadian provinces, it may be illegal to drive the motorhome while primary valve on the LP tank is open.

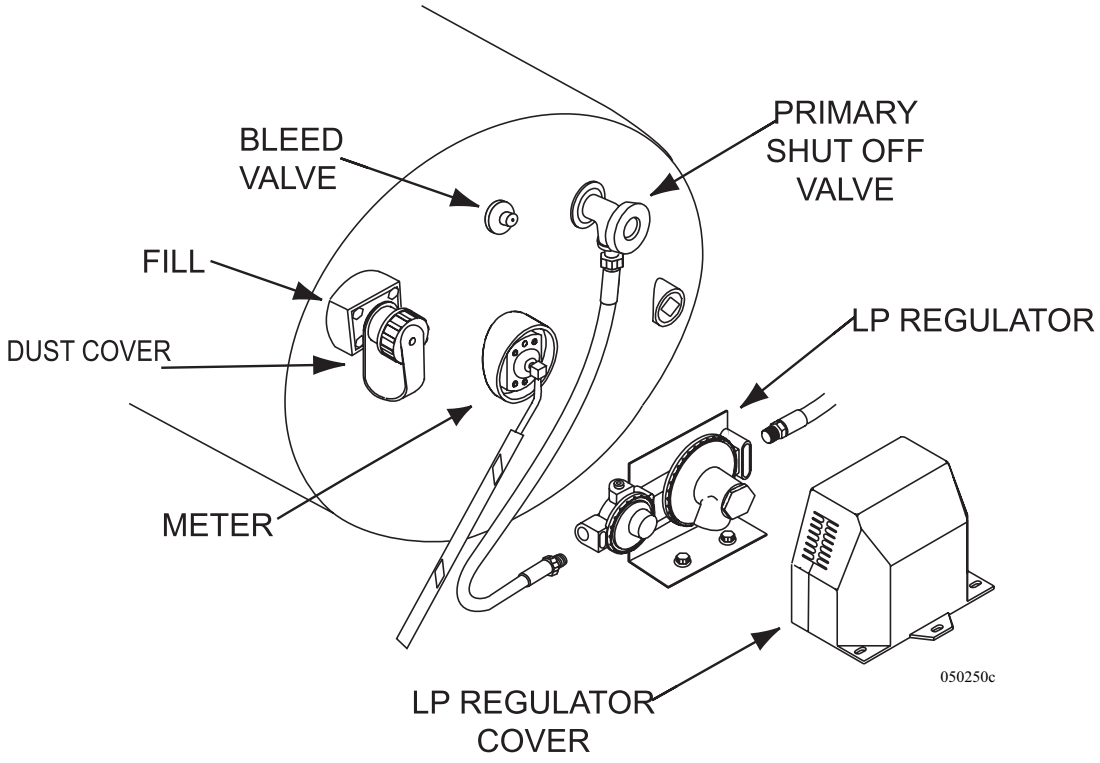

LP-GAS FUNDAMENTALS

# Capacity	Gallon Capacity	BTU Capacity
5	1.18	107,909
10	2.36	215,807
11	2.59	237,387
20	4.72	431,613
30	7.08	647,420
40	9.43	863,226

CONVERSIONS

Gallons to Liters (1 Gallon = 3.785 Liters)
Fahrenheit to Celsius (F° - 32 ÷ 1.8 = C°)
11 in. Water Column = 6 1/4 ozs. per sq. in. pressure.
27.7 in. Water Column = 1 lb. per sq. in. pressure.

The above capacities allow for 20% vapor space on each cylinder.

Data taken from the National Fire Prevention Association (NFPA). Pamphlet #58-1998.

LP-Gas Statistics:	
Pounds Per Gallon	4.24
Specific Gravity of Gas	1.50
Specific Gravity of Liquid	.504
Cubic Feet Gas Per Gallon of Liquid	36.38
Cubic Feet Gas Per Pound	8.66
BTU Per Gallon	91,502
BTU Per Pound	21,548
Dew Point in Degrees Fahrenheit	- 44° F
Vapor Pressure at 0° F	31
Vapor Pressure at 70° F	127
Vapor Pressure at 100° F	196
Vapor Pressure at 110° F	230
Flash Point	842° F

Basic Facts About LP-Gas:

- LP-Gas detectors are a federal requirement on all LP-Gas equipped recreation vehicles.
- LP-Gas is a by-product produced by refining oil.
- Odor is added to LP-Gas after the refining process.
- Each liquid gallon of LP-Gas produces 91,502 BTU (British Thermal Units).
- Temperature affects pressure of LP-Gas. Internal tank pressure can exceed 200 psi.
- Tanks or valves contain pressure relief valves. The relief valve opens at 125% above tank rating.
- LP-Gas stops vaporizing at -44º F.
- Standard LP-Gas operating pressure is 11" of Water Column or approximately 6 ¼ ounces per square inch.
- An inch of Water Column is a measurement of applied pressure to one side of a U-Tube ½ filled with water at sea level. The amount of pressure required to raise the water level 11", represents 11” of Water Column.

NOTE:
The above information is not a complete guide for the use of LP-Gas tanks or appliances. In cold climates keep LP-Gas level above 50% in order to keep vaporization of LP-Gas at the highest level.

LP-Gas is compressed into liquid form in the tank. Only the vapor is used during combustion by an appliance. As vapor is removed from the tank, the remaining liquid will vaporize to maintain pressure that is removed during consumption. This process will continue until there is no liquid remaining in the tank.

Temperature affects the vaporizing action of the liquid. If temperature of the liquid is - 44º F, the liquid remains stable with tank pressure, about 0 psi. If liquid temperature is 100º F, the liquid quickly vaporizes with tank pressure, about 200 psi. Vapor pressure must remain relatively consistent, regardless of temperature, for the appliance heat output to remain stable. Vapor pressure regulation is performed by the regulator.

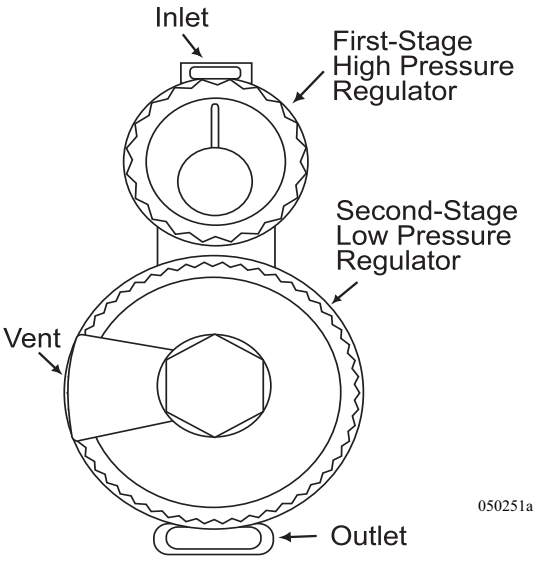

Typical Two-Stage Regulator

The two-stage regulator reduces vapor pressure so that it is safe for use. The first stage of the regulator reduces tank pressure to a range of 10 to 13 psig (pounds per square inch gauge). The second stage further reduces pressure to a working pressure of 0.4 psig (11 Inches of Water Column or about 6¼ ounces psi.). A vent is installed to allow the internal diaphragm to move with atmospheric pressure change. It is important to keep the vent clean and clear of obstruction or corrosion. If the vent becomes clogged, pressure from LP tank may cause erratic pressure regulation. If there is any corrosion, contact a qualified LP-Gas service technician. The regulator is mounted so that the vent faces downward. If the vent becomes clogged, clean it with a toothbrush.

Under normal atmospheric conditions an LP-Gas regulator will not freeze, nor will the LP-Gas. Vapor passing through the regulator will expand and cool, condensing moisture in the gas. The moisture will freeze, build up and block the vent. The possibility of freeze up is greatly reduced with the two-stage regulator.

To Prevent Freeze Up:
- Ensure the LP-Gas tank is totally free of moisture prior to filling.
- Ensure the tank is not overfilled.
- Keep the valve closed when the tank is empty.

If A Freeze Up Occurs:
- Have an LP-Gas distributor purge the tank.
- Have the LP-Gas distributor inject methyl alcohol in the tank.

Damage to the regulator can occur when the tank is overfilled. The regulator is designed to work with vapor only. This is why the tank is filled to only 80% of its liquid capacity. The other 20% allows for vaporization of the liquid. The primary vapor valve is located in the vapor section of the tank. In an overfilled tank, liquefied petroleum can fill the regulator. As the liquid vaporizes, it can freeze the diaphragm. High tank pressure on a frozen diaphragm can cause a rupture and result in erratic pressure regulation. This is why it is important to have the LP-Gas pressure checked for proper pressure and accurate regulation during appliance operation. Erratic pressure regulation dramatically affects refrigerator operation on LP-Gas.

Manometers:

The manometer is the best way to accurately determine LP-Gas pressure. There are two different styles of manometers: Gauge and U-tube. Gas pressure is measured in Inches of Water Column. This is the amount of pressure applied to one side of a U-shaped tube half filled with water. The amount of pressure needed to raise the column of water **11"** represents **11 Inches of Water Column**.

WARNING:
Do not attempt to adjust the regulator. Adjustments require special equipment. Failure to follow these instructions may result in a fire or explosion, and can cause severe personal injury or death. Do not operate LP-Gas appliances until the LP-Gas pressure is checked and a leak down test is performed!

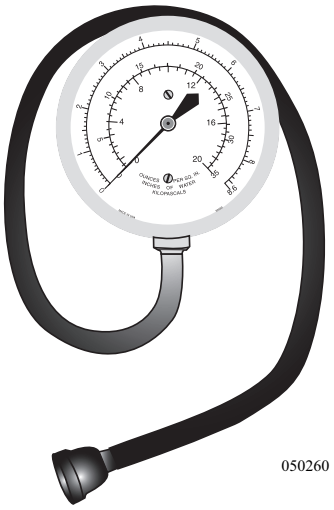

Manometer Gauge

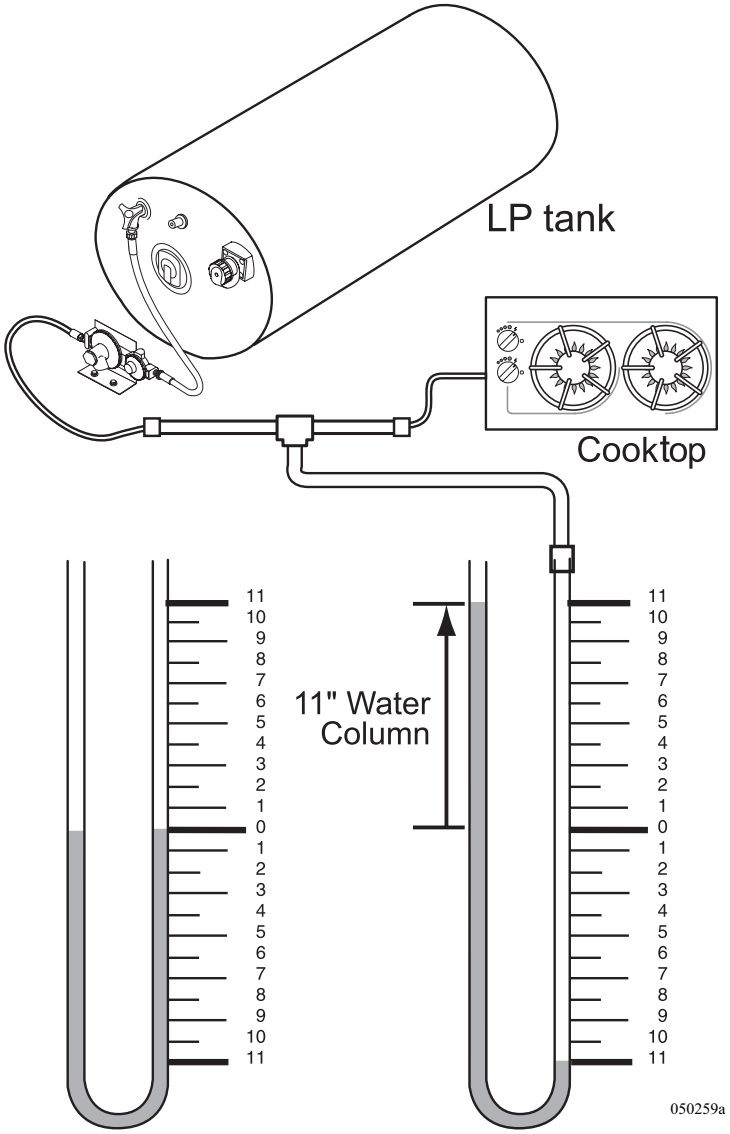

U-Tube Testing Layout

It is suggested by the hose manufacturer that the LP-Gas supply hoses used on the motorhome undergo regular inspection. As a guideline, we suggest that all flexible LP-Gas lines connecting the slide-out, appliances and tanks be inspected in the spring and fall of each year by a qualified RV technician.

According to the manufacturer, inspection should consist of the following procedures, and performed when the hose is not under pressure:

1. **INSPECTION:** Inspect the outside cover of the hose for blistering, abrasion or cuts and coupling slippage. Cuts in the hose cover that expose or damage the reinforcement are cause for replacement. Hose strength is controlled by the plies of reinforcement and damage in this area cannot be tolerated. Small cuts, nicks, or gouges that do not go completely through the cover are not cause for replacement of the hose.

   NOTE:
   Pricking of the cover in the manufacture of this type of hose is common and necessary for satisfactory hose performance. Consequently, the uniformly pricked cover should not be viewed with alarm.

2. Damage to the textile reinforcement or wire braid is cause for hose replacement. Wire braid reinforced hose, which has been kinked or flattened so as to permanently deform the wire braid in the unpressurized state, shall be removed from service.
3. Blistering or loose outer cover is cause for hose replacement.
4. Examine couplings for slippage. Slippage is evidenced by the misalignment of the hose and coupling and/or the scored or exposed area where slippage has occurred. Any evidence of slippage is cause for hose replacement.
5. It is important that if a damaged LP-Gas hose is found, the source of the damage be determined and corrected prior to the replacement of the LP-Gas hose.

   NOTE:
   Only a qualified RV technician should complete replacement of LP-Gas components.

It is also suggested, that the flexible LP-Gas supply lines on your recreational vehicle be replaced every ten (10) years. The manufacturer of the LP-Gas supply lines recommended this schedule after performing extended testing and determining that the failure rate may increase after this period of time. The motorhome manufacturer recommends following these guidelines to assure continued safety and dependable use.

LP-GAS DISTRIBUTION LINES

A primary manifold black steel pipe running throughout the motorhome distributes LP-Gas to secondary lines. All secondary lines leading to gas appliances are made of copper tubing with flared fittings. If any lines rupture do not attempt to splice them. Always run a new line. It is recommended that gas distribution work be performed by an authorized dealer or an authorized service technician. When removing or servicing any gas appliance, manually close the primary valve located on the LP-Gas tank. This will prevent dangerous gas leakage that could result in an explosion and possible serious injury.

INSPECTION:
Inspect the rubber flexible lines, twice a year, for abrasions, tears, kinks or other signs of damage.

If a gas leak is suspected, get the system inspected and repaired by a qualified service technician as soon as possible.

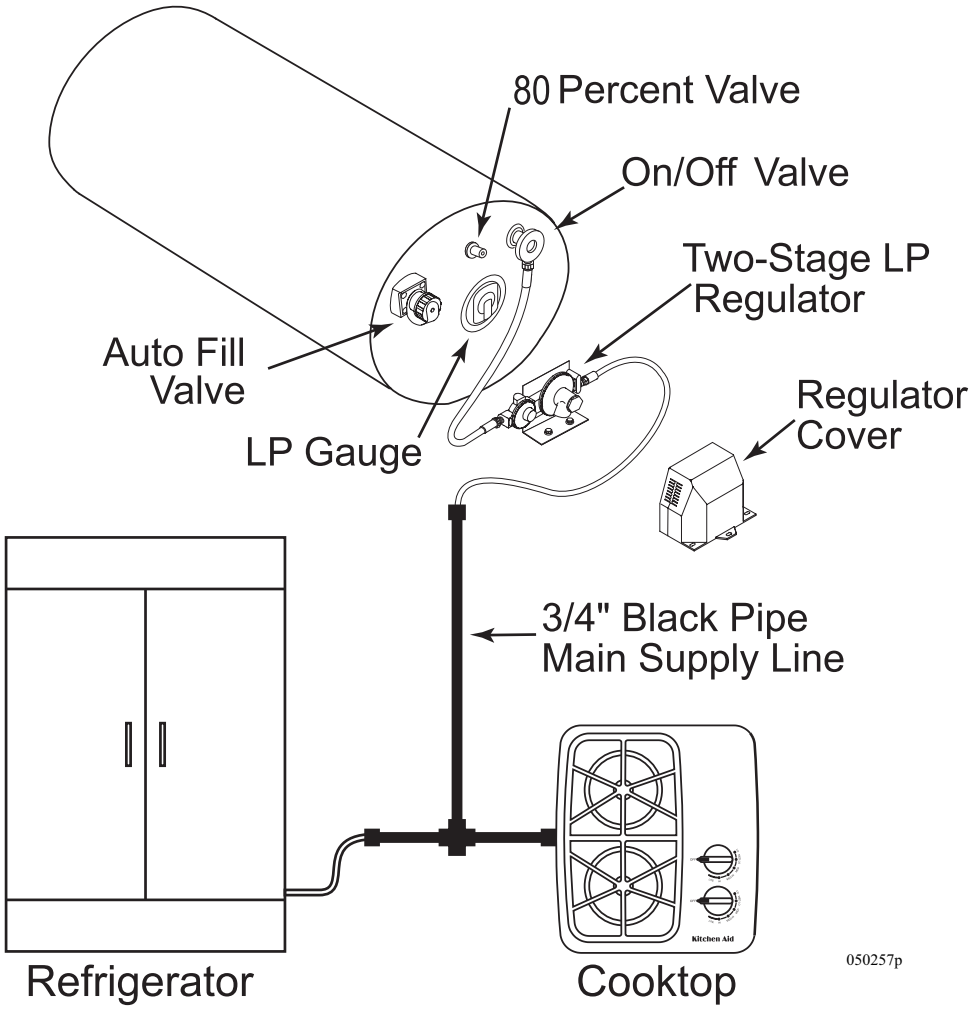

Typical LP-Gas System Layout

Each gallon of LP-Gas produces 91,502 BTUs of heat. One 27 gallon tank produces two million BTU's. Total consumption depends on the rate of usage by each appliance and the operating time. The stove typically uses the most LP-Gas.

Determine Fuel Consumption:

To determine approximately how many hours an LP-Gas appliance will operate on one gallon of LP-Gas, use the following formula:

- LP-Gas appliances are rated in Input BTU (British Thermal Units). The rating is usually stamped or printed on a tag affixed to the appliance. For example: the Input rating of the appliance is 10,000 BTUs.
- One gallon of LP-Gas produces 91,502 BTUs.
- Divide the amount of BTUs of one gallon of LP-Gas (91,502) by the rating on the appliance in this example 10,000. Net continuous operation time for one gallon of LP-Gas for this appliance would be approximately 9.2 hours.

The above formula can be useful when trying to determine the approximate length of time a tank of LP-Gas will last. Generally, LP-Gas appliances do not operate continuously. An example would be the typical cycling of the furnace or water heater.

Determining how long a tank of LP-Gas will last:

- Combine the BTU input totals of all appliances, and the approximate length of time these appliances operate per day.
- Multiply the number of liquid gallons in the LP-Gas tank by 91,502.
- Divide the total of BTUs of the LP-Gas tank by the total number of BTUs the appliances consume, equals the approximate number of hours of operation before refueling.

Typical Appliance BTU Ratings
Cooktop Large = 12,000 BTU Small = 6,000 BTU
Refrigerator 2-door 1,500 BTU 4-door 2,200 BTU

WARNING:

LP-Gas is highly volatile and extremely explosive. Never use matches or open flame to test for leaks. Use only approved LP-Gas leak testing solution to test for leaks. Unapproved solutions can damage copper tubing and brass fittings. Never attempt to adjust the LP-Gas regulator without the use of proper equipment. Improper LP-Gas regulator adjustment will affect the performance of LP-Gas operated appliances. Incorrect flame or explosion can occur. Only qualified personnel should perform any maintenance or repair to the LP-Gas system.

LP-GAS SAFETY TIPS

LP-Gas is one of the safest and most reliable fuels available on the market when handled properly. LP-Gas, however, does have a great explosive “potential" if handled improperly. Danger is minimized by becoming familiar with and following a few safety precautions, and by learning how to properly operate LP-Gas appliances. Use of LP-Gas requires the responsibility to enforce extra safety measures.

The motorhome is equipped with many LP-Gas operated appliances because it is a convenient and efficient source of fuel. LP-Gas appliances must be operated and maintained in accordance with the product manufacturer’s instructions.

The National Propane Gas Association (NPGA) has a special service program offered called GAS® (Gas Appliance System) Check. The GAS® Check program is aimed at educating users about the convenience of propane with safety and peace of mind. For information on the **NPGA Gas® Check program, call (202) 466-7200 or visit www.npga.org.**

LP-Gas Tanks and Cylinders:

Tanks are built to American Society of Mechanical Engineers (ASME) Code. The cylinders are built to DOT (Department of Transportation) Code. The major difference between cylinders and tanks is in required testing and inspection procedures, and in construction of the containers. Both tanks and cylinders are required to undergo pressure testing and inspection; however, the procedures for how they are tested and inspected differ.

The difference between the two codes are that the valves, fittings and brackets are located only on the ends of the DOT cylinders; however, on the ASME tanks they may be located on ends, as well as the sides. There is also a difference in how the tanks are rated. Required tank ratings are in gallons (ASME ratings) or pounds (DOT) water capacity. The Federal DOT (Department of Transportation) regulations require periodic inspections and re-qualifications of cylinders.

American Society of Mechanical Engineers (ASME) tanks or bulk containers are generally used in motorhomes, and are permanently mounted on to the unit.

An alloy steel two-piece welded and brazed tank is used on all towable products. The marking on the collar, DOT 4BA240, identifies the DOT specifications and service pressure. Other pertinent information included on the collar is the water capacity (WC) and the tare weight (TW), both which are measured in pounds, and the manufacture date (one of the most important items). There is a required 12 year re-qualification. The final piece of information is Dip Tube (DT) length. This is part of the overfill protection and maximum liquid allowance in the cylinder.

Maintenance and Safety Tips for the LP-Gas Refrigerator:

- Have the refrigerator venting inspected annually by an authorized server center.
- Before firing up the refrigerator or using the LP-Gas furnace for the first time each season, have the venting system checked for blockage. Insects may have built next that will obstruct flow.
- At the first indication of incomplete combustion (yellow flow instead of a blue flame or soot is present) contact a service technician immediately. Improper combustion can cause carbon monoxide buildup, which is potentially fatal!

Maintenance and Safety Tips for the LP-Gas Range:

- Burner flame should be a blue color, indicating complete combustion. If not, have the unit serviced by a qualified technician.
- Do not cover the oven bottom with foil. Air circulation will be restricted.
- Never use LP-Gas ranges or ovens for heating purposes.
- Always have pot handles turned inward.
- Ensure children understand never to turn or play with the knobs on the front of the LP-Gas range.

NOTES

Signature 2005

Electrical Systems - House ▪ Section 8

HOUSE ELECTRICAL - INTRODUCTION 321
BATTERY DISCONNECT - HOUSE.....322
BATTERY CUT-OFF SWITCH 322
SHORE POWER HOOK-UP.....323
Power Cord Reel.....327
AC120 Volt & Amp Meters 327
TRANSFER SWITCH.....328
GENERATOR - 240 VOLT AC 329
Pre-Start Checks.....329
Starting the Generator.....330
Stopping the Generator 330
Powering the Equipment.....331
Generator Fuel.....331
Resetting the Circuit Breaker 332
Generator Exercise.....332
GENERATOR - AUTO GEN START (RC7 GS) 333
INVERTER - 3000 WATT 336
RC7 GS Remote.....337
Stand-By Operation.....337
Battery Charging with the Inverter 338
Battery Temperature Sensor 338
Pass-Through AC Power 339
Main Menu Display 339
Meters Menu.....340
Programming the Inverter.....341
Re-booting the Inverter 344
INVERTER-SINE WAVE (Opt.) 344
Remote.....346
Programming & Resetting 347
Stand-by Operation 348
Battery Charging 349
Battery Temperature Sensor 349
Pass-Through Power.....349
Meters Menu.....350
Automatic Generator Start Programming 351
Inverter Facts.....354
DISTRIBUTION PANELS - HOUSE 240/120.....355
Circuit Breaker 356
GFCI BREAKERS & OUTLETS.....356
DISTRIBUTION PANEL - HOUSE 12 VOLT 358
Multiplex.....358
FUSES 361
Tools of the Trade 361
Knowing When to Say When.....362
BATTERY.....362
How It Works.....362
House Batteries.....363
Battery Maintenance 364
Testing the Battery 364
Battery Voltage & Current.....366
Battery Charge Time & Consumption Rate.....367
SOLAR PANEL.....368
Charge Controller.....368
Solar Panel Care 370
LIGHTS - INTERIOR HALOGEN.....370
MAP LIGHTS.....371
BULB USAGE - INTERIOR 371
ALL ELECTRIC (Opt.) 372
Overview 373
Meters 373
Remotes 374
House Batteries.....375
Main Battery Disconnect 377
Wiring Systems Interfaced 378

The motorhome 120/240 Volt AC system can be operated from three different power sources: shore power, the on-board generator or the inverter/charger. Shore power is the most efficient and should be used whenever possible. The generator can be used when shore power is unavailable. The inverter/charger supplies silent AC power using the house batteries of the motorhome. The AC power output is limited and should be used sparingly.

Two different sources supply the main AC circuit breaker panel with power: the 50 Amp shore power cord or the on-board generator. The power source used is automatically selected by a switching device known as a transfer switch. The inverter supplies AC power to the sub-panel.

WARNING:
The electrical system is engineered and tested for complete safety. Circuit breakers and fuses protect the electrical circuits from overloading. When planning modifications or additions to the electrical system, we strongly recommend consulting the dealer for assistance to ensure continued integrity and safety of the electrical system. Please note that any modifications may void the warranty.

WARNING:
Water is electrically conductive. Do not use any electrically powered item or electrical outlet that may be exposed to a water source. Such use can result in a serious shock causing injury or death.

Shore Power:

The motorhome is equipped with a shore power cord to connect the motorhome to outside electrical services. Shore power service is the most efficient source of electrical power. The plug end of the shore power cord is 50 Amp, 240 Volt. When this type of power service is not available, electrical adapters will be required to allow a proper and safe connection to the electrical service supply.

NOTE:
When 50 Amp shore service is not available, care will have to be used when operating the appliances and using the outlets to avoid overloading the shore power service.

Generator:

The generator can be selected for use when shore power is unavailable. The maximum amount of generator output power, measured in watts, is calculated at an elevation of 500 feet above sea level. This figure will decrease slightly at higher altitude. Ambient temperature also effects total maximum output. The amount of AC electrical load applied to the generator determines fuel consumption.

Inverter/Charger:

The Inverter/Charger provides silent AC power when shore power is unavailable, and the generator is not selected as a secondary power source. This device has limited AC power output, measured in watts, and operates only selected appliances and outlets. The Inverter/Charger is an auxiliary 120 Volt AC power source that inverts 12 Volt DC house battery power to 120 Volts AC. The Inverter/Charger also converts 120 Volts AC power, supplied from either shore power or the generator, to 12 Volts DC power, to recharge the batteries. When dry camping, the Inverter/Charger may be used to supply power to selected outlets.

BATTERY DISCONNECT - HOUSE

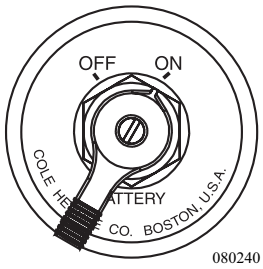

Located in the battery compartment, curbside.

The main house battery disconnect switch turns the house battery power supply on or off by disconnecting 12 Volt DC power to the following items: inverter, Multiplex System, domestic fuse panel in the front run box and domestic power supply in the rear run box(s). Turn the house battery disconnect switch off when the motorhome is going to be stored, or before performing electrical maintenance. If possible, leave the motorhome plugged into an AC source with the battery disconnect switch on to help prevent the possibility of dead batteries. Use of this battery cut-off switch will not turn off all DC electrical items or other parasitic loads present on the house battery. Some are federal mandate items such as the LP-Gas detector. If an AC power source is not available, and the motorhome is going to be stored for more than 48 hours, it is recommended to turn the house battery disconnect switch off.

BATTERY CUT-OFF SWITCH

The battery cut-off switch is located inside next to the entry door. This switch controls the 12 Volt DC power to the domestic fuse panel and Multiplex System. The switch locks into the center position to prevent interior DC power from being accidentally turned on or off. When the switch is activated, power is supplied to all interior DC lighting and DC operated appliances. Some appliances will require both DC and AC power to operate, such as the roof air conditioner. This switch is helpful when dry camping to conserve house battery power. Refrigerator and inverter operation are unaffected by the operation of this switch. When the interior house power is off, there are still parasitic loads on the house batteries, and therefore is not a substitute for the main battery disconnect switch.

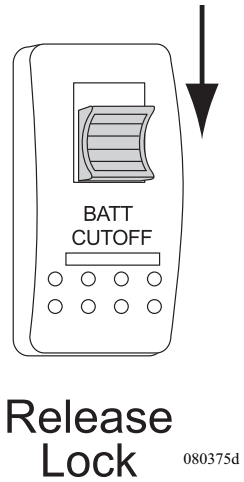

To Turn the Interior Power On or Off:

• Simultaneously push the spring-loaded lock down and push the switch.

<u>CAUTION:</u>
To avoid flash damage to electrical contacts, turn off the interior lighting with the Multiplex master On/Off switch before operating the battery cut-off switch.

The power requirement for the motorhome is 50 Amp 120/240 Volt AC single phase. The shore cord is stored in the rear roadside compartment. If 50 Amp shore power service is available, connect the supplied shore power cord. If less than 50 Amp service is available, electrical adapters will be required.

CAUTION:
Avoid flash damage to the electrical system contacts. Before plugging the motorhome into shore power, starting the generator or using the inverter make sure all the appliances are off.

WARNING:
Keep fingers away from metal contacts of the shore plug end. Do not stand in water when making electrical connections. Serious electrical shock and personal injury can occur. To avoid the risk of electrical shock, turn the circuit breaker off at the power supply outlet before making the shore power connection.

CAUTION:
Do not remove cover from shore power supply to troubleshoot electricity to the motorhome. Serious personal injury or death may occur. If there is no power to the motorhome inform the park manager. It is the park manager's responsibility to fix problems with the shore power hook-up.

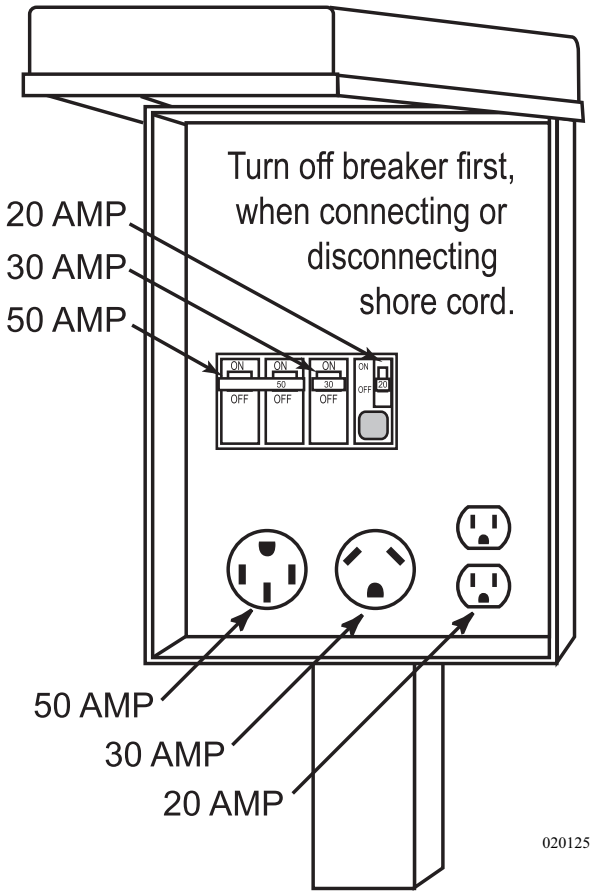

Plugging in the Shore Cord:

- Located in the roadside compartment is the shore power cord.
- Locate the power cord switch. Extend the cable by placing the switch to the Out or Up position. Extend a sufficient amount of cable to reach the power supply, then turn the switch to the center or Off position. If 50 Amp service is not available, install the proper electrical adapter(s) to the cord.
- Always turn off the shore power breaker to the power supply before connecting or disconnecting the shore cord. This will prevent an accidental shock and flashing of electrical contacts.
- After the connection is made, turn the shore power breaker on. The transfer switch should make an audible click.
- Check the AC voltage using the Aladdin™ screen.

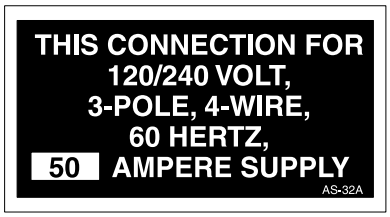

060203

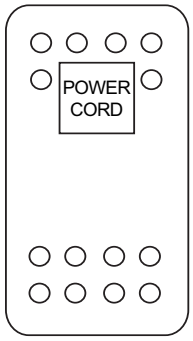

060066b

Disconnecting the Shore Cord:

- Turn off all AC appliances. This will prevent accidental shock and flashing of electrical contact when disconnecting.
- Turn off the shore power breaker.
- Grasp housing of electrial cord. Without touching electrical contacts, work cord out and away from socket.
- Straighten and clean cord.
- Press bottom of switch to retract the power cord.

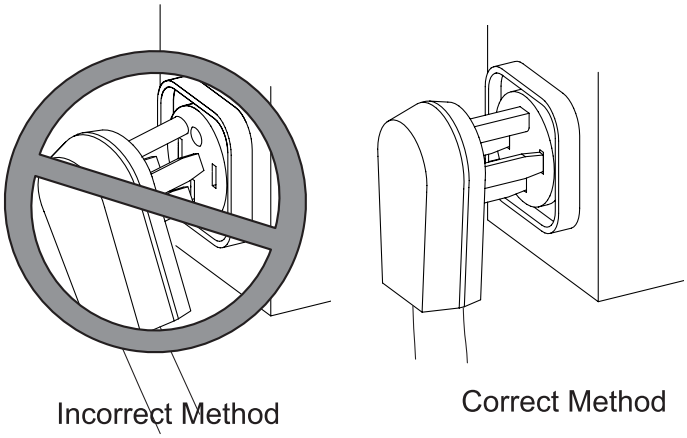

060212c

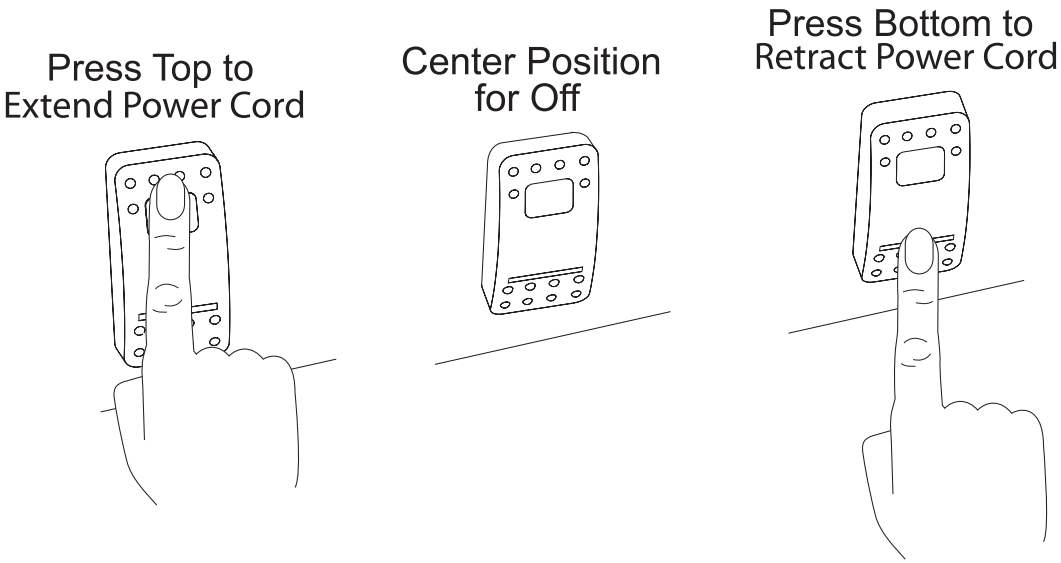

080357c

When Hooked to 50 Amp:

After verifying proper voltage, wait approximately one minute for the inverter/charger to "stabilize" charging of the batteries before starting air conditioners or other large AC loads.

When Hooked to 30 Amp:

Wait approximately one hour before operating electric appliances. This will allow time for the inverter to stabilize charging the batteries. Use caution when operating appliances to avoid overloading the supplied shore service breaker. Operate appliances and outlets in sequence rather than all at the same time.

CAUTION:
If shore power service is limited to 15 or 20 Amps, use of light duty extension cords and electrical adapters will create voltage loss through the cord and at each electrical connection. Line voltage loss and the resistance at each electrical connection can be a hazardous combination. Damage to sensitive electronic equipment may result!

WARNING:
Avoid the risk of electrical shock or component damage by disconnecting from shore power during electrical storm activity. Use the Inverter/Charger or start the generator if AC power is needed.

NOTE:
Three types of shore power outlets most commonly used are shown in the illustration.

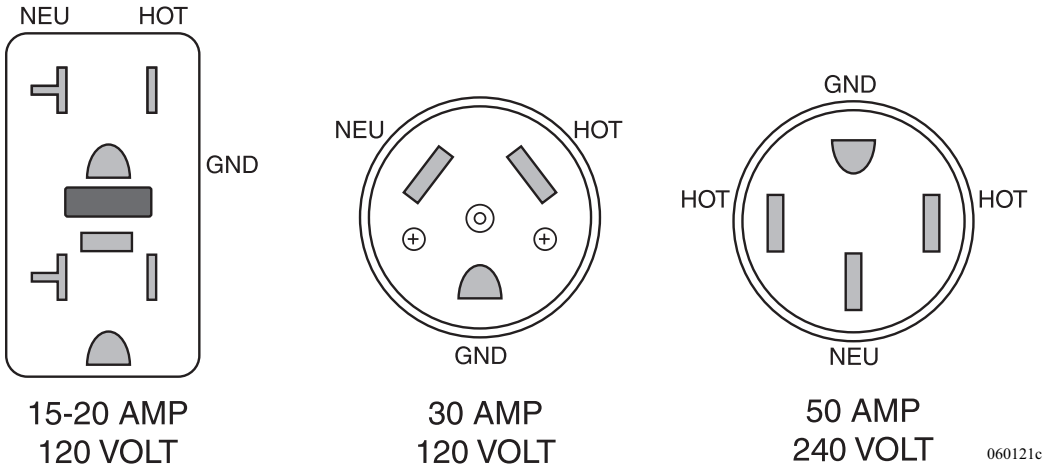

Power Supply:

Different amperage supplies vary greatly in the amount of available current.

- The continuous amount of current through a breaker or fuse is only 80% of its rated capacity.
- 50 Amp 240 Volt AC shore power service consists of two power supply conductors, a neutral and a safety ground. The 50 Amp breaker simultaneously limits each power supply conductor to no more than a short-term maximum of 50 Amps for each conductor. The 50 Amp 240 Volt service actually provides 80 continuous amps.
- Use care when hooked to anything less than 50 Amp shore service. Shore power service less than 50 Amps consists of one power supply conductor, a neutral and a safety ground; 30 Amp shore service is limited to 24 continuous Amps; 20 Amp shore service is limited to 16 continuous Amps.

Electrical Adapters:

There are many different electrical adapters to suit a variety of needs. Only UL approved adapters should be used. The most common adapter is a 50-30 Amp adapter. The type of connector adapts the 50 Amp shore cord to a 30 Amp shore power outlet. Another common adapter is the 30-20 Amp adapter. Always install the adapter to the cord prior to making the connection to the outlet.

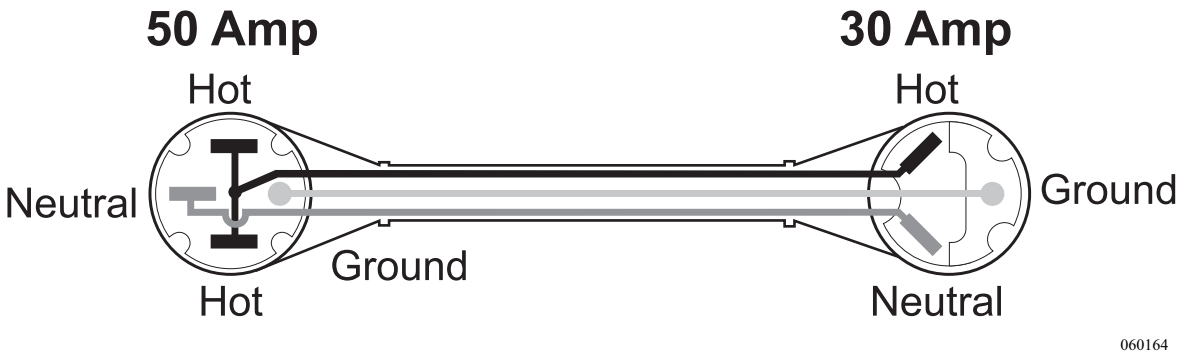

Typical 50-30 Amp Adapter.

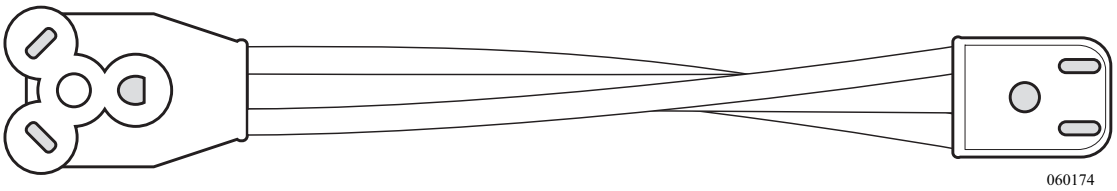

30-20 Amp adapter. Adapts the 30 Amp shore cord to a 20 Amp shore power outlet.

Power Cord Reel

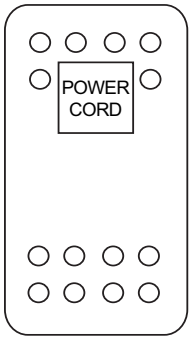

060066b

The Power Cord reel is a 12 Volt DC motorized assembly designed to mechanically coil and stow the shore cord. The Power Cord reel is located in the roadside compartment of the motorhome. One end of the Power Cord reel is wired directly to the transfer switch. The motor control switch is labeled **IN** and **OUT**. This switch operates the 12 Volt DC motor to extend or retract the cable.

When extending or retracting the power cord, turn the switch to the direction desired. Assist the cord, following the direction of travel. Extend only as much power cord as necessary to reach the shore power outlet. When the cord is connected to shore power, the cord should be slightly slack.

Maintenance:

When only a short section of the shore power cable is frequently used, the cable may coil sharper than normal and kink. To relieve kinking, routinely extend the cable full distance and straighten the power cable on the ground. It is important the cable remains clean. Accumulated dust and dirt on the cable may cause difficulty in retracting the cord. After cleaning and straightening the cable, allow the Cablemaster to retract the cable into the motorhome.

Check all AC and DC wiring at least once each year to ensure corrosion-free, tight connections. Check the neoprene covers on the In-Limit switch and the Power Switch to confirm they are free of cracks or fracture.

WARNING:
Before working on the electrical system, disconnect from shore power and turn off the Inverter/Charger. Disconnect the negative 12 Volt DC battery cables at the inverter. Remove rings, metal watchbands and other metal jewelry before working around batteries and connectors. Use caution when working with metal tools. If the tool contacts a battery terminal or metal connected to it, a short circuit could occur causing personal injury, explosion or fire.

AC120 Volt & Amp Meters

Aladdin™ System displays the following AC and DC electrical values:

- AC voltage, amperage and frequency values when hooked to shore power, or when operating from the generator.
- House Battery DC voltage and amperage.
- Solar panel charge voltage and amperage.

	VAC	AMP	FRQ
AC LEG 1	116	19.4	60
AC LEG 2	116	0.2	60
	VDC	AMP	
SOLAR	3.5	1.4 CHG	
HOUSE BAT	12.6	45 CHG	

The Aladdin™ System monitors the two "hot" supply lines of the 240 Volt AC system. Voltage, amperage and frequency values are measured at the transfer switch. After hooking to shore power check that incoming electrical values are satisfactory. Monitor current consumption when using appliances while hooked to anything less than 50 Amp service. AC values will read "Off" when using the inverter for AC power.

Use the Aladdin™ System to avoid low or high voltage operation, or to monitor DC current consumption when dry camping.

NOTE:
When operating from the inverter, use the inverter remote display to monitor AC voltage and amperage.

TRANSFER SWITCH

Transfer Switch Cover

The transfer switch uses electronics to monitor voltage input for high or low voltage conditions. If the incoming voltage from the generator or shore power exceeds 138 AC Volts, or if voltage drops below 105 AC Volts, the transfer switch automatically disconnects the electrical service. This helps prevent damage to voltage sensitive equipment that can occur.

Surge Protector:

A surge protector, mounted to the transfer switch, prevents the motorhome from receiving a sudden "spike" of incoming voltage.

When hooked to shore power, or operating from the generator, lights on the surge protector will activate to indicate the surge protector is operating. If one, or both, indicator lights are inactive, damage to the surge protector or electrical system may have occurred. Disconnect from shore power, stop the generator and **do not** use the inverter. Replace the surge protector and have the electrical system inspected by a qualified electrical service technician.

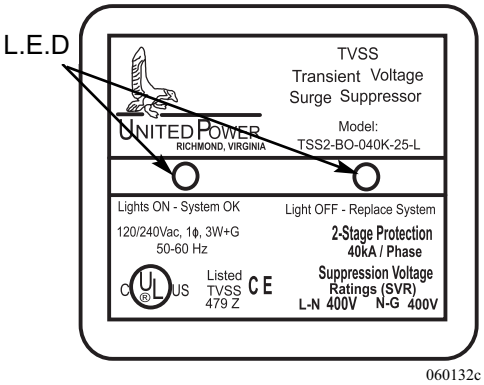

Surge Protector: Connected to transfer switch in roadside bay.

NOTE:
To prevent damage to the transfer switch contacts, do not operate appliances or plug AC loads into the outlets when hooking to shore power or starting the generator. If voltage from shore power is below or above acceptable levels, start the generator and disconnect from shore service until shore power supply voltage becomes stable.

GENERATOR - 240 VOLT AC

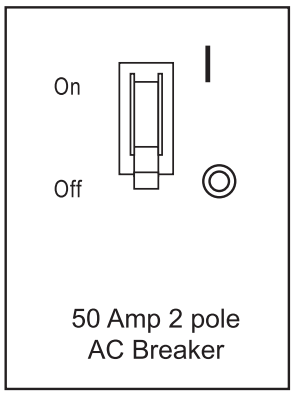

The generator is located in the front compartment of the motorhome.

The generator can be started from the following locations:
- Generator remote switch on the dash.
- Generator control panel located on the generator.
- Bedroom control panel.
- Inverter panel.

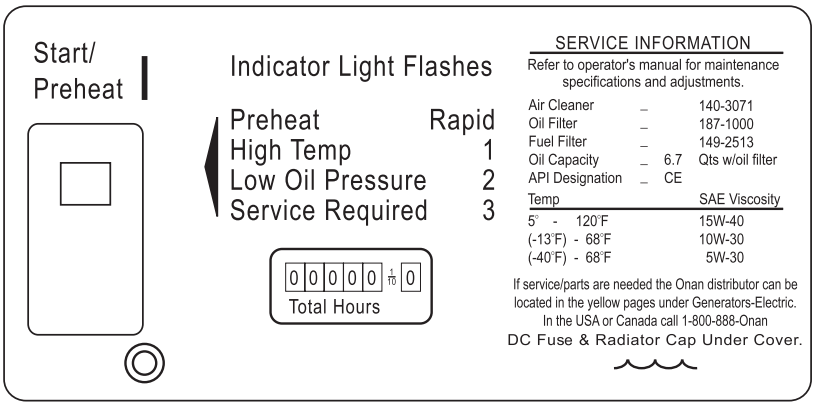

Panel Location at Generator

060144i

Pre-Start Checks

Prior to the first start of the day perform a general **inspection** including oil and coolant levels. Keep a maintenance log on number of hours in operation since the last service. Perform any service or maintenance that may be due.

WARNING:
Disable the Auto Gen Start feature before serving the generator.

Before Starting the Generator:
- Clear people and animals from hazards of electrical shock and moving parts.
- All appliances and other large AC electrical loads must be off.

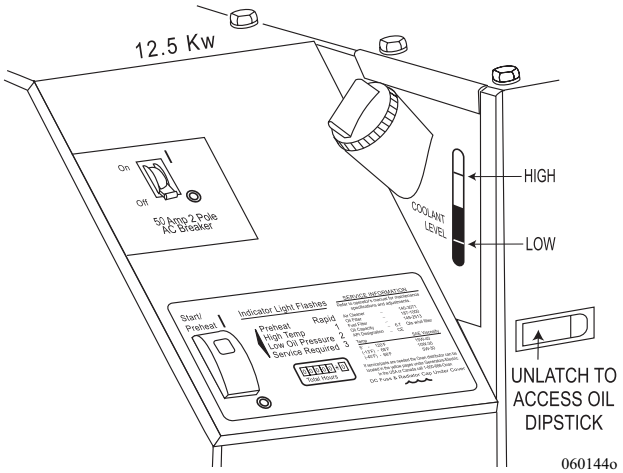

060144o

NOTE:
The generator may require priming. To prime hold control switch in the OFF position. Repeat if necessary. The diesel generator fuel pick-up tube is cut to approximately 1/4 tank so as not to run the main engine out of fuel.

Starting the Generator

Push and hold the control switch in **START** position until the generator starts. Release switch. The control switch may flash up to 15 seconds, indicating engine preheat.

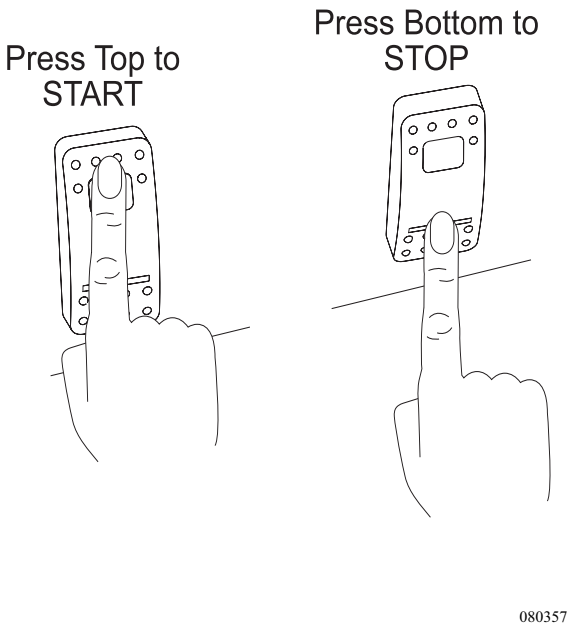

WARNING:
Excessive cranking can overheat and damage the starter motor. Do not crank the engine for more than 30 seconds at a time, in two minute intervals. If the generator fails to start, refer to the manufacturer's manual.

WARNING:
When the motorhome is parked, position the dash air conditioner vent control in the OFF position to prevent exhaust gases from entering the motorhome during generator operation.

Engine exhaust contains Carbon Monoxide, an odorless and colorless gas. Carbon Monoxide is poisonous and can cause unconsciousness and/or death. Inspect the exhaust system thoroughly before starting the generator. Do not block the exhaust pipe, or situate the motorhome where the exhaust may accumulate around the motorhome or nearby vehicles. Operate the generator only when safe dispersion of exhaust can be assured. Monitor outside conditions to ensure the exhaust continues to safely disperse.

WARNING:
When parking near high grass, be sure that the hot exhaust gases or the exhaust pipe does not contact the grass and ignite, resulting in a fire.

CAUTION:
An exhaust extension adds weight and stresses the generator exhaust system. Damage to the exhaust piping or exhaust manifold can result, allowing Carbon Monoxide gases to accumulate under or leak into the motorhome.

Stopping the Generator

Turn off the appliances and disconnect other AC loads being used. Allow the generator to run unloaded for at least one minute before shutdown to allow the engine to cool. Momentarily push the control switch to the **STOP** position. Release the switch.

Powering the Equipment

The AC output of the generator powers the motorhome air conditioners, the AC Inverter/Charger, all appliances and items plugged into the electrical outlets of the motorhome. The number of electrical appliances that can be operated at any given time depends upon how much power is available from the generator. If the generator is "overloaded" or a short circuit causes "over current," either the generator will shut down or the circuit breaker will trip. If power consumption, in total, exceeds the generator power output, compensation for temperature and elevation may be necessary. Operate appliances in sequence, rather than all at the same time.

NOTE:
The generator may shut down when loaded nearly to full power and an air conditioner (or other large motor load) cycles on. For a brief moment during start up an electric motor can draw up to three times the rated power. For this reason it may be necessary to operate some appliances in sequence when air conditioners or other large motor loads are on.

Air density decreases as altitude increases. Power decreases at approximately 3% of the rated power each 1,000 feet (305M) of increase in elevation 500 feet above sea level. It may be necessary to operate fewer appliances at the same time when the camping location is at a higher elevation. For example: 7500 watt generator at 5,000 ft. = 6375 watts net. Temperature also affects maximum output power. For example: at 120º a 7500 watt generator produces 6000 watts net.

INFORMATION:
The generator may shut down for reasons other than an overload. If a blink code appears on the control switch, refer to the manufacturer's manual to obtain an explanation for the code.

Generator Fuel

There is always a possibility fuel may be contaminated. Diesel fuel may contain water or a microbe growth (black slime). Any contamination of fuel will greatly reduce the total output of the generator, and may cause erratic AC output.

NOTE:
The motorhome manufacturer does not cover damage to the generator caused by fuel contamination, or to appliances due to erratic AC voltage.

AVERAGE FUEL CONSUMPTION	DIESEL 12,500 WATTS (gal./hr.)
No Load	.1
Half Load	.5
Full Load	1.2

Resetting the Circuit Breaker

If a circuit breaker trips in the main AC breaker panel, or on the generator control panel, there may be a short circuit or too much load.

NOTE:
The generator will continue to run after a circuit breaker trips.

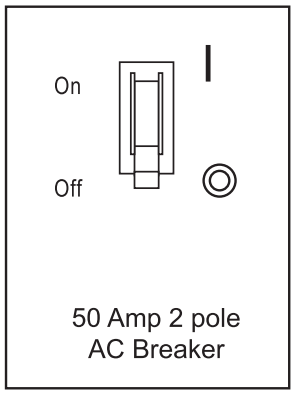

If a circuit breaker trips, disconnect or turn off as many loads as possible. To reset the circuit breaker, switch the circuit breaker to OFF; then switch back to ON to reconnect the circuit. If the circuit breaker immediately trips, the electrical distribution system has a short or the circuit breaker is faulty. Call a qualified electrician. If the circuit breaker does not trip, reconnect a combination of loads that will not overload the generator or cause the circuit breaker to trip again. Remember to compensate for elevation and temperature changes when re-connecting loads.

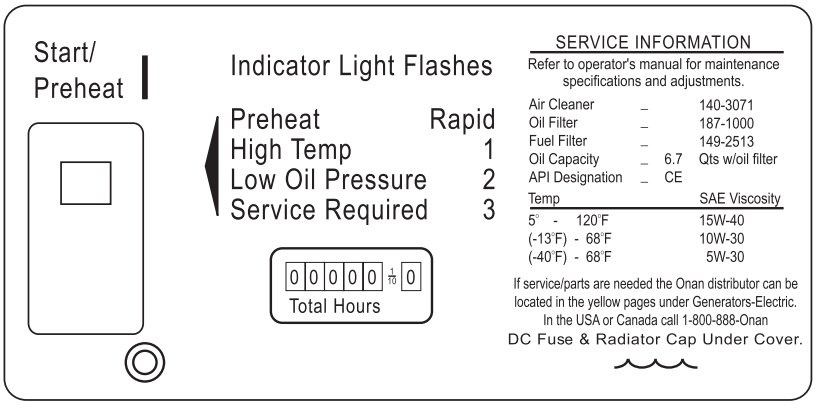

Panel Location at Generator

060144i

NOTE:
An appliance or load may have a short if it causes a circuit breaker to trip after re-connection. DO NOT continue to reset breaker. Have the problem corrected before resuming operation.

Generator Exercise

If use of the generator is infrequent, “exercise” the generator once a month by operating it at approximately half the maximum rated output for two hours. This “exercise” will help promote better starting, more reliable operation and longer engine life. This procedure drives off moisture, lubricates the internal engine parts, replaces the old stale fuel with a fresh supply, and also promotes removing oxides from the electrical switches and contacts.

NOTE:
Avoid short run periods of the generator. Run the generator set under a load for a minimum of one-half hour.

House batteries operate most of the interior lighting and appliances. As house battery power is consumed, the inverter can be programmed to automatically start and stop the generator to keep up with the drain on house batteries. A wide field of parameters can be programmed for generator start and stop points. The settings listed below are an average that should work in most situations. The Automatic Generator Start feature can be programmed when hooked to shore power, operating from the generator, or operating from the batteries.

CAUTION:
Disable the automatic generator start program before refueling, during generator servicing or when storing the motorhome.

INFORMATION:
These instructions are only a guide and not a replacement for the Inverter Owner's Manual. Please refer to Inverter Manual for in-depth information.

Entering the Setup Mode:

1. Press the **Setup** (up and down arrows) simultaneously for five seconds then release. After entering **Setup** mode, **Search Sense** should display. If this is not displayed, press **Setup** again.
2. Under the **Search Sense** heading, **Defeat** should display. If not, press **Settings** until the inverter is set to **Defeat** in the **Search Sense** heading.
3. Press **Down** arrow once, **Auto LBCO** will display. This should be set to **ON**. If not, press **Settings** once. **Auto LBCO** should now be **ON**.
4. Continue through the rest of the list using the **Down** arrow. Use **Setting** to change the value. When the program is set it may be necessary to slightly adjust the program profile to fit a particular need.

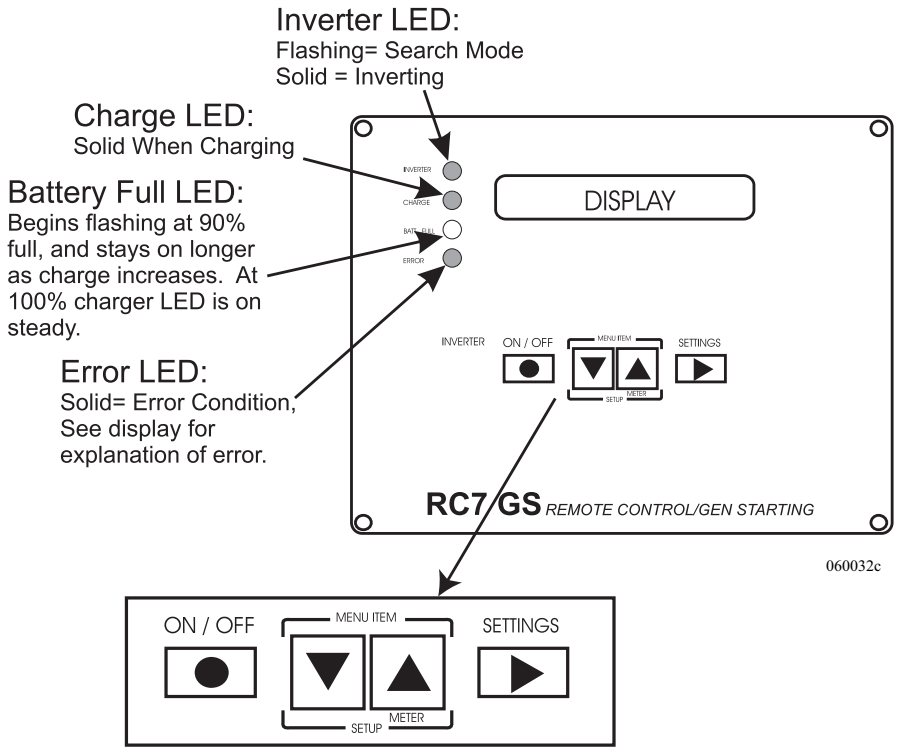

Settings:

- Search Sense = Defeat.
- Auto LBCO = On.
- Battery Capacity = 500 Amp standard. 1000 Amp All Electric.
- Battery Type = Select Liquid Lead Acid.
- Charge Rate = 100%.
- Shore Power Amps = 30 Amp.
- RC7 GS Setup = Personal preference on this. Last key will continuously display the last screen viewed. In **Power Saver** mode, the last screen will display for a short period of time then the screen will go blank.
- LCD Contrast = Max Contrast. The screen will fade with each successive contrast selection. Continue to press **Settings** until "**Max Contrast**" appears.
- External Shunt = Select None.
- Fuel Gauge Cutout = 11.8 Volts DC.

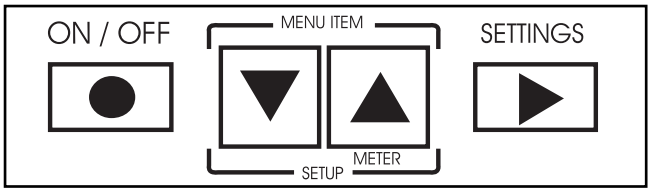

060032c

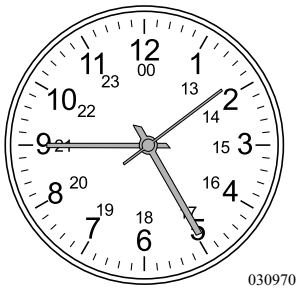

030970

Example of a 24 hour clock.

Set Clock:

The next group of settings is when, and under what conditions, the generator will start and stop. The clock must be set before the inverter will allow programming changes to the rest of the menu headings. Scroll down to the last menu heading **Set Clock**.

- Hours and minutes will alternately flash every eight seconds.
- Use the Settings button to advance the flashing hours or minutes. The clock is a 24 hour clock. If the display reads 00:01, it is 12:01 a.m. If the clock reads 13:00, it is 1:00 p.m.

NOTE:
The clock time and the generator start/stop programming will be erased whenever the main battery disconnects are turned off.

Programming Auto Start:

After setting the clock, press the **UP** button to scroll back up to the Menu item **Generator Start** to set the conditions at which the generator will automatically start and stop. The following is a general guide. Use the Up and Down arrows to customize settings.

- Generator Start = 50% State of Charge (SOC).
- Generator Stop = 90% State of Charge (SOC).
- Begin Generator Quiet Time = This is the time when the generator will stop operation. 19:00 is 7:00 PM.
- End Generator Quiet Time = This is the time when the generator can start. 09:00 is 9:00 AM.
- Select Generator = Onan Quiet Diesel.

Automatic Generator Start is now programmed. Exit by simultaneously pressing **Set-Up** buttons. **Waiting for AC**, **Inverting** or a charge status **Bulk**, **Absorb** or **Float** should now be displayed.

When the generator starts from the Auto Start program it will automatically stop at 90% State of Charge. If the generator started from the Auto Start program, and is still operating at Gen Quiet Time, the inverter will shut the generator off.

A **RED** error light flashes and the display will indicate Gen Quiet Time. The fault alarm will sound for a short time, and can be silenced by pushing the **Up** or **Down** button.

NOTE:
Use the RC7 GS remote to start the generator manually after the Automatic Generator Start feature is enabled. If the generator is started manually from any remote switch other than the RC7 GS remote while the Automatic Generator Start feature is enabled, the inverter may shut the generator off due to the parameters set.

Starting the Generator Manually:

- Use the RC7 GS remote to start or stop the generator when the Automatic Generator Start feature is enabled.
- Press the **UP** or **DOWN** arrow (while in the main menu) until **Generator Start/Stop: Press (ON/OFF)** is displayed.
- Press and hold the **ON/OFF** button until the generator starts. The display will indicate the generator was started manually. Use the **ON/OFF** button or any of the generator start/stop switches to stop the generator.

To Disable Automatic Generator Operation:

- Set the generator Start and Stop points back to Manual **ON/OFF**, or switch off the house and chassis main battery disconnects to erase the clock time and generator start/stop programming.

INVERTER - 3000 WATT

Use the inverter to supply silent AC power to most receptacles, the television and microwave when shore power is unavailable and the generator will not be used as the secondary AC power source option. Use of the inverter will greatly increase house battery power consumption. Turn off the inverter when not in use to conserve house battery power.

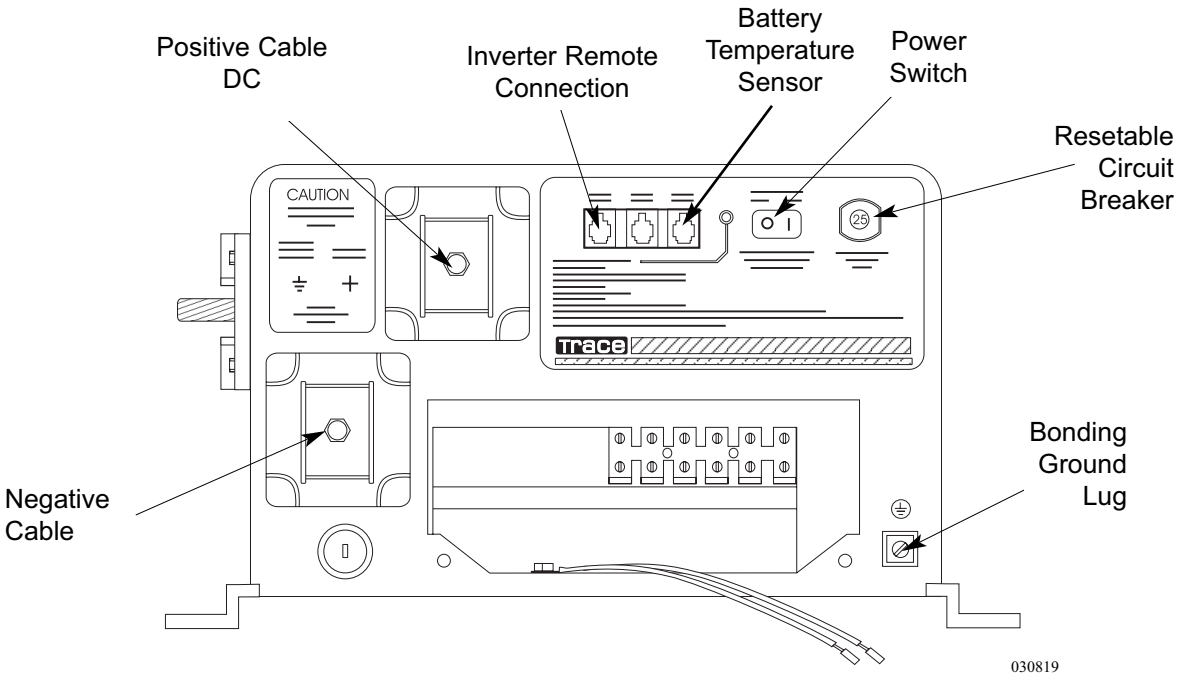

To turn the inverter On or Off:

• Momentarily press the inverter **ON/OFF** button on the RC7 remote control.

<u>NOTE:</u>
This information is not a replacement for the inverter manual. Consult the Inverter Owner's Manual for complete instructions.

RC7 GS Remote

The RC7 GS remote control is used to change or add features and set variable parameters. The remote may also be used to start and stop the generator.

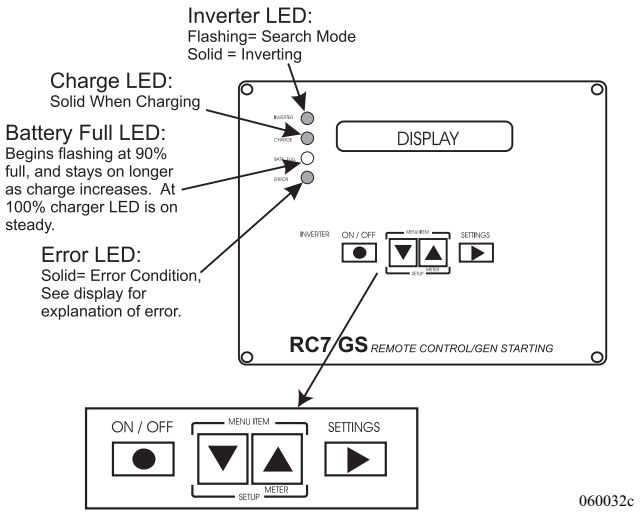

RC7 GS Remote features include:

- Automatic generator start.
- Fully adjustable battery charge rates.
- Adjustable fuel gauge cut-out.
- Adjustable charging curves for different battery types.
- Adjustable power sharing.
- Meters Menu.

The remote control liquid crystal display (LCD) and light emitting diodes (LED) are used for operation status conditions. The LED lights give inverter status, charge status, battery condition and error indications at a glance. The LCD screen displays charging cycle status, various meter readings, automatic generator operation status, programming field and error messages.

The inverter ON/OFF button turns the inverter on or off, and can be used to start or stop the generator. The Up or Down arrows are used to scroll up or down through the operation or meter fields. The Up arrow is used to toggle between operation and meter fields. Pressing the Up and Down arrows will simultaneously access the programming field. The Settings button is used to set or scroll through a particular programming field.

NOTE:
The main switch on the Inverter/Charger is to remain ON.

Stand-By Operation

The Inverter/Charger can be programmed for stand-by power operation to automatically provide AC power if shore power discontinues, or the generator is turned off. When AC power resumes, the inverter will automatically return to "Stand-By" mode and begin charging the batteries.

To Enable Stand-By Mode:

- Momentarily press the blue **On/Off** button while the motorhome is hooked to shore power or operating from the generator. The Status light on the remote panel will blink slowly. Battery charging is not affected in Stand-By mode.

NOTE:
Disable stand-by operation when not in use. House battery power may accidentally be consumed, causing the house batteries to drain.

Battery Charging with the Inverter

Whether hooked to shore power or operating from the generator, the internal battery charger of the inverter will automatically charge the batteries when AC power is supplied to the input terminals of the inverter. The time it takes to charge the batteries to a full state of charge is dependent upon the inverter set-up parameters and actual state of charge of the batteries.

Inverter three-stage charging cycle:

- **Bulk Charge Cycle:** Brings the DC voltage up high, initially between 14.2 - 14.6 Volts. The length of time the inverter is in Bulk Charge depends the state of charge of the batteries.

- **Absorb Cycle:** Absorb Cycle battery voltage is the same as the Bulk Charge Cycle, between 14.2 - 14.6 Volts. Length of the Absorb Cycle is a timed event determined by the inverter.

- **Float Charge Cycle:** Charge voltage is generally around 13.3 - 13.7 Volts. Approximately 80% of the charging cycle has been completed by this time.

<u>NOTE:</u>
The Inverter/Charger will charge the batteries with AC power applied regardless of remote status.

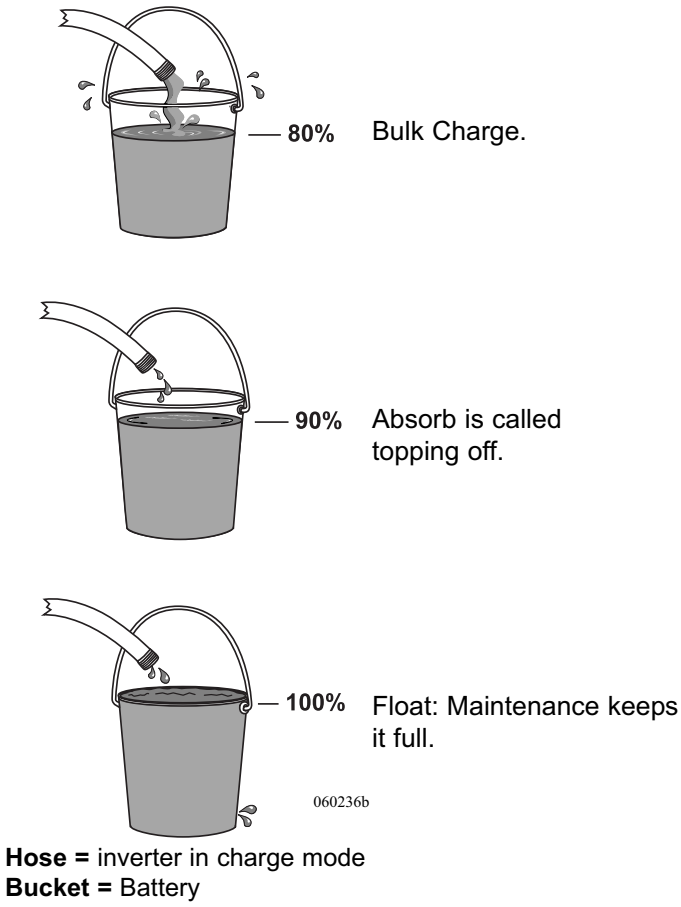

Battery Temperature Sensor

B.T.S - Attached to one house battery.

A Battery Temperature Sensor (BTS) is affixed to one of the house batteries to measure battery temperature and send that information to the inverter. When battery temperature rises, the inverter will decrease charge voltage to prevent boiling the batteries. When battery temperature cools, the inverter will raise charge voltage. Voltage compensation with temperature variation is necessary to keep charge voltage at optimum values. If the BTS cord is unplugged from the inverter, the inverter will use a temperature default setting of 77º F/25º C as a reference point.

Pass-Through AC Power

A double pole "pass-through" relay trips when AC power is supplied to the input terminals to transfer AC power through the inverter to the sub breaker panel in the bedroom. The sub breaker panel supplies AC power to most outlets and appliances. When the inverter receives AC power, the internal battery charger "ramps up" battery charging voltage. After approximately 20 seconds, the relay engages, allowing AC power to pass through the inverter to the sub-panel.

Main Menu Display

The Main Menu displays operating status of the inverter. Use the **Up** or **Down** arrows to scroll through the Main Menu.

Waiting for AC:
System inactive waiting for AC power to be supplied.

Inverting:
Unit is inverting.

Charging Cycle Status:
Bulk, Absorb or Float mode.

Battery State of Charge:
Based on the Fuel Gauge Cutout setting. May be displayed in percentages or as a fuel gauge.

Time Left To Run:
Evaluates the battery reserve capacity at current operating load based on the Fuel Gauge Cutout and Battery Bank Capacity settings.

Time Left To Charge:
Estimated time left to charge batteries to full state of charge based on Fuel Gauge Cutout and Battery Bank Capacity settings with current battery voltage.

Generator Start/Stop:
Use inverter ON/OFF button to remotely start the generator, or to override automatic generator start feature for manual operation. This feature is available to use without altering automatic generator start programming.

Meters Menu

The Meters Menu displays specific numeric accounts of the inverter.

To Access the Meters Menu:
Press and hold the **UP** arrow for five seconds. The RC7 GS remote will beep. Release the button. **Avg Shunt Amps** should be displayed. Use the **Up** or **Down arrows** to scroll the field. This field area includes:

Avg Shunt Amps:
Measures the DC current either charging or discharging. Most of the house DC current usage is monitored by the inverter.

Battery Voltage:
Monitors the house battery voltage.

Inv/Chg Current:
Measures the AC current usage when the inverter is charging.

Inverter Output VAC:
Monitors the AC output voltage while the unit is inverting.

AC Input Amps:
The inverter uses a double pole pass through relay, measuring current consumption through the Hot 1 terminal.

Battery Temperature:
Monitors counts of the battery temperature sensor (BTS). Counts are measured impulses which the inverter uses to calculate the battery case temperature. The charging voltage is adjusted to optimum values.

Xformer Temp:
Monitors the transformer temperature which is measured in counts. Higher count readings are registering lower temperatures.

FET Temp:
Monitors the Field Effect Transistor temperature which is measured in counts.

Est Batt Cap:
Estimates the battery bank capacity in amp hours (Ahrs). Charging and discharging on a cyclic basis will give an approximate indication of the battery capacity in amp hours. Observe the reading and multiply by eight to obtain an approximate reserve capacity. This figure is only approximate and will change with cyclic use.

The factory settings of the inverter will work in most situations. Before changing program values consult the Inverter Manual for complete details.

To enter programming mode:

- Press and hold the **up** and **down** arrows for five seconds. The RC7 GS remote will beep.
- Release the buttons. The programming mode has been entered when the Search Sense is displayed.
- Use the **up** and **down** arrows to scroll though available field settings.
- Use the **right-pointing** arrow to scroll through available settings for selected field.

To exit the programming mode:

- Allow 20 seconds to elapse from the time the last key is pressed. Program changes are then accepted by the inverter in non-volatile memory.
- Momentarily pressing the **up** and **down** arrows to exit the programming menu. Program changes are automatically saved in non-volatile memory.
- The inverter is now ready to use. **Waiting for AC** will display, or if any program changes were made with AC applied, one of the three stages of the charge cycle will display: **Bulk**, **Absorb** or **Float**.

NOTE:
Non-volatile memory is a permanent programming change accepted by the inverter. Turning the main battery disconnect switches off does not affect programming changes. Only the inverter clock time and automatic generator start/stop programming will be erased.

Search Sense:

The inverter searches for an AC load. For example: While inverting, AC loads of various amperage may be applied. These loads may range from a few watts to several amps. Search Sense is the cut-in point when the inverter will exit "Sleep Mode" and start inverting at a standard output voltage. The Defeat setting allows the inverter to be at a constant standard output voltage. When changing the Search Sense value, AC loads must be evaluated for proper inverter operation.

Auto LBCO:

Automatic Low Battery Cut-off may be turned on or off to allow the inverter to use available DC voltage at a set value while inverting. Turning the LBCO **ON** stops the inverter when the battery voltage drops to 10.5 Volts DC. Turning the LBCO **OFF** stops the inverter when the battery voltage drops to 8.5 Volts DC. This leaves the batteries fully discharged, but not completely dead.

Battery Capacity:

Battery bank capacity is adjustable in Ahrs (Amp hours). Settings change charging curves, and the length of time of the charging cycles. Range is from 125 Ahrs to 1,000 Ahrs. Select the closest Amp Hour rating for the house battery bank capacity. The Auto setting will "learn" the battery bank size by user characteristics. For example: Discharging and recharging the batteries on a cyclic basis. The inverter takes several charging cycles to "learn" an individual battery bank size. When the main battery disconnects have been turned off, the "learn" memory is erased.

Battery Type:

Battery types differ in chemical composition. Chemical types require charging characteristics at different voltages.

Available battery types are:

• AGM (Absorb Glass Matte) • Gel Cell • Liquid Lead Acid

Charge Rate:

Charge rate is adjustable from 10 to 100%. Selecting a lower percentage charge rate will lessen the charger's current consumption, taking longer to charge batteries and leaving the user a few extra AC Amps when operating from a limited AC power source.

Shore Power Amps:

This is a load shedding feature of the battery charger in the inverter. For example: Shore Power amps set to 30 Amps will decrease the AC current available for the internal battery charger's use, as pass through AC current value approaches 30 Amps. Lowering shore power amps will limit the available AC current for the internal battery charger's use. This is adjustable from 5 to 30 Amps, in 5 Amp increments.

RC7 GS Remote Panel Setup:

Allows the user to select the desired screen display. The Last Key will leave the menu active, with the last status viewed on the display. The Rolling Display will continue to scroll through the active menu status display. Power Saver allows the display to "sleep" after viewing the status. Touch any key to "awaken" the RC7 GS remote, then press the desired key.

LCD Contrast:

This changes the display screen contrast. Six settings are available. Lighter contrast settings may leave the screen difficult to see in a bright atmosphere.

External Shunt:

The inverter monitors both AC and DC current values, whether charging or discharging (figures are approximate), by using internal or external shunts. The shunt monitors partial current consumption, allowing the majority of current to pass on heavier conductors. Programming shunt selection affects which shunt the inverter is using to monitor DC current values. Single inverter systems use an internal shunt to monitor system DC current values. When programming single inverter systems select External Shunt None. Dual inverter systems use an external shunt to monitor system current values. When programming the shunt selection of a dual inverter system, the master inverter is programmed by the remote installed in the monitor panel. The master inverter will be programmed as External Shunt This Inverter. The slave inverter will be programmed as External Shunt Other Inverter.

Fuel Gauge Cutout:

Battery chemistries and types have different static voltage readings at different states of charge. The battery voltage may be used to determine an approximate state of charge for that battery type and chemistry. The Fuel Gauge Cutout voltage is a reference point the inverter uses to determine a battery with no reserve capacity amp hours remaining. Changing the value of the Fuel Gauge Cutout will affect the fuel meter, automatic generator start and stop points if set by SOC (state of charge) and time left to run or charge. The Fuel Gauge will read 0 when the Fuel Gauge Cutout pre-programmed voltage reaches 50% SOC.

NOTE:
The remaining field items are used to program the Automatic Generator Start parameters.

The house batteries operate most of the interior lighting and appliances. As house battery power is consumed, reserve battery capacity diminishes. The inverter can be programmed to automatically start and stop the generator to keep up with the drain on the house batteries. All field reference points are house battery indications or conditions. A wide field of parameters may be chosen for the generator start and stop points. These points may be set in three categories:

1. House battery voltage.
2. State of charge (SOC). The Fuel Gauge Cut-out affects SOC.
3. Absorb or Float point of the charge cycle.

Example: The inverter can be programmed to start the generator when house battery voltage drops and to stop the generator when the house battery voltage obtains a pre-programmed state of charge (SOC). When selecting field reference points, the start and stop points spread to prevent short cycling of the generator.

NOTE:
If the generator is started manually from any remote switch other than the RC7 GS remote while the automatic generator start feature is enabled, the generator may shut down due to field parameter settings.

To override the automatic generator operation and operate the generator manually, use the RC7 GS remote Inverter button. Press the **UP** or **DOWN** arrows while in the Main Menu until **Generator Start/Stop: Press (ON/OFF)** is displayed. Manually stop the generator using the **ON/OFF** button.

Re-booting the Inverter

The RC7 GS remote is a display only. If the inverter exhibits unusual symptoms, such as not responding to commands or displaying erroneous error conditions, re-boot the inverter.

To Re-boot the Inverter:

1. Remove AC power from the inverter by disconnecting shore power and/or shutting the generator off.
2. Turn the main switch on the inverter to the **OFF** position.
3. Switch house and chassis main battery disconnects to the **OFF** position.
4. Wait 30 seconds, allowing time for the capacitors to discharge.
5. Switch house and chassis main battery disconnects to the **ON** position.
6. Turn the main switch on the inverter to the **ON** position.
7. Connect the shore power cord or start the generator.

INVERTER-SINE WAVE (Optional)

Use the inverter when shore power is not available and not using the generator as a secondary power source. The inverter/charger has limited AC power output. It may be necessary to operate items in sequence rather than everything at once. Exercise care when using the inverter as an AC power source. Use the inverter sparingly as it quickly consumes house battery power.

When hooked to shore power, or operating from the generator, the inverter charges the house battery bank. The inverter will not automatically begin charging when hooked to shore power or operating the generator. A charge mode must be selected. The amount of time to charge the batteries to a full state of charge will vary with the depth of discharge when the charge cycle begins and any additional DC loads, such as lights.

NOTE:
The inverter is programmed at optimum values from the factory. Changing program values may adversely affect inverter performance.

To Turn ON the Inverter:

• Press the red button on the inverter remote until the cursor scrolls to **On**.

To Turn OFF the Inverter:

• Press the red button on the inverter remote until the cursor scrolls to **Off**.

To Begin Battery Charging:

• Hook to shore power or start the generator.

• Press the red button on the inverter remote until the cursor indicates either **Chg** or **On**.

NOTE:
This is not a substitute for the owner's manual for the inverter. The inverter is comprehensive with many variables. Not all the programming details are covered.

NOTE:
When hooked to shore power or operating the generator, press the red button to enter a charge mode by selecting "On" or "Chg" in the main menu. Failure to enter either mode will result in dead batteries.

Sine Wave Cycle Patterns:

Inverters use battery power to make AC power. AC is Alternating Current, meaning the power signal alternates from positive to negative 60 (cycle) times a second. The term "sine wave" refers to the oscillating characteristic of the cycle. Inverter output cycles commonly come in two configurations Modified Sine Wave or True Sine Wave. The output cycle of a true sine wave inverter closely mimics the electrical wave pattern of a utility company or generator when observed with electronic equipment.

When AC power is available, the inverter will time itself to follow the incoming wave pattern. If the inverter is in stand-by operation when AC power discontinues, the inverter will immediately begin inverting and supply AC power to any loads.

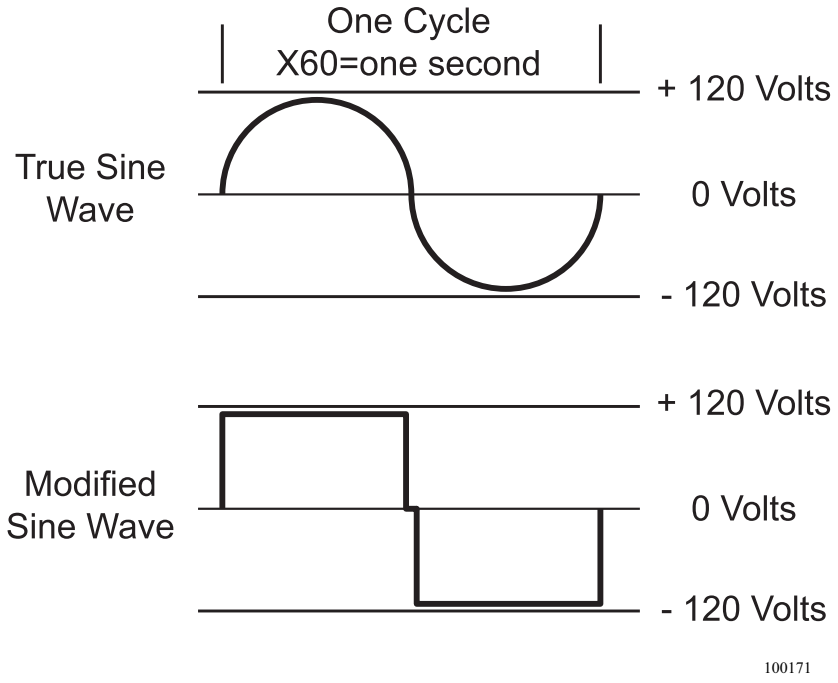

Remote

The sine wave inverter is fully programmable with many features. Use the remote control to change or add features and set variable parameters.

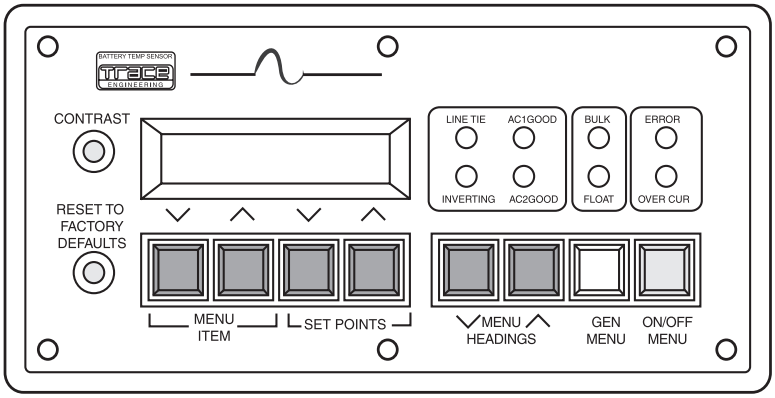

060111

Features of the Remote:

- Fully adjustable battery charge rate.
- Adjustable charging curves for different battery types.
- Adjustable power sharing.
- Meters menu.
- Automatic generator start.
- Manual generator start.

The remote control uses a liquid crystal display (LCD) and light emitting diodes (LED) for operation status and programming. The LED lights give inverter status, AC input, charge status and error indications at a glance. The LCD screen displays various meter readings, programming field and error messages.

There are 14 main headings listed in the programming field, referred to as Menu Headings. Most of the Menu Headings have several sub-headings. Sub-headings are referred to as Menu Items.

Navigating the Menu:

- Pressing a **Menu Headings** button enters Menu Heading numbers **1** to **8**, referred to as the **User Menu**.
- Pressing the red and green buttons simultaneously will access Menu Heading numbers **9** to **20**, this is the **Setup Menu**.
- Use the **Menu Headings UP** or **DOWN** arrows to scroll the various main headings. A number in the lower right hand corner of the screen indicates the number of the heading.
- Use the **Menu Item UP** or **DOWN** arrows to scroll the various sub-heading of a Menu Heading.
- Use the **Set Points UP** or **DOWN** arrows to change the values of a subheading.

NOTE:
A complete description of the Menu Headings and Menu Items are listed in the inverter manual. Refer to the list when accessing the menu or changing program values.

Red Button:

Press the **red** button to scroll the cursor. An underscore of the first letter indicates the selected mode. Press the **red** button to turn ON the inverter, battery charger or quickly exit programming mode and return to **Menu Heading** number **1**, **Inverter Mode**.

OFF - Turns the inverter and charger off. The charger will not activate in this mode when AC power is available.

SRCH (Search) - Turns the inverter on when a specified load, rated in watts, is applied to the inverter. Generally, there are enough loads to turn the inverter on in this setting.

ON - Turns the inverter on regardless of load. When AC is available the charger turns on and the inverter goes into **Stand-by** mode.

CHG - Turns the charger on when AC is available. If AC power discontinues, the charger will stop.

NOTE:
When hooked to shore power, or operating the generator, use the red button to enter a charge mode by selecting either On or Chg in the main menu. Failure to enter a Charge mode will result in dead house batteries.

Programming & Resetting

Green Button:

Press the **green** button to scroll the cursor. An underscore of the first letter indicates the selected mode. Press the **green** button to enable the **Automatic Generator Start** program, start the generator or begin Equalize Charge.

OFF - Turns off inverter control over any generator function.

AUTO - Enables the automatic generator start program.

ON - Overrides the automatic start program and starts the generator.

EQ - Starts an Equalize Charge to the house batteries on the next start cycle of the automatic generator start. The equalize charge (EQ) feature applies a high-voltage charge to the house batteries. The Equalize Charge voltage can exceed voltage operating limits of engine, transmission or other sensitive electronic equipment resulting in extensive damage. The EQ feature should only be enabled by qualified personnel. Before beginning an equalize charge, consult the battery manufacturer to obtain information on performing an equalize charge.

WARNING:
An Equalize Charge uses a significantly higher than normal charge voltage which can damage sensitive electronic equipment. Precautionary measures are required when performing an Equalize Charge. Only a qualified RV service technician should enable this feature. Consult the battery manufacturer before beginning an equalize charge cycle.

Inverter Reset:

The factory default settings in the inverter are set to optimum values for most situations. Slight adjustments may be necessary depending on the amperage available from shore power, personal habits and battery type. A comprehensive study should be done before making any changes to the programming profile. If the programming was altered, it is easily reset to the factory default values.

To Reset the Inverter:

- Press the **Menu Headings Down** button on the remote until Trace Engineering heading “3” displays.
- Using the **Menu Item** buttons, scroll down until “Press Reset Now For Default” displays on the screen.
- Using the eraser end of a pencil or a pen, press the “Reset to Factory Default” button on the remote.

NOTE:
The main switch on the inverter remains ON.

Stand-by Operation

The inverter can be set-up for stand-by power operation. For example: If AC input is discontinued to the motorhome, the inverter will automatically provide AC power. When AC power resumes, the inverter will automatically return to "stand-by" mode. Battery charging is not effected by stand-by operation.

To Activate Stand-by Mode:

- Press the **red ON/OFF** button until the cursor indicates **ON**.

NOTE:
Remember to disable stand-by operation when not in use. House battery power may be accidentally consumed.

NOTE:
In All Electric motorhomes, the inverter supplies the power necessary to operate the refrigerator if shore power is not available or not operating from the generator.

Battery Charging

Whether hooked to shore power or operating from the generator, the internal battery charger of the inverter will charge the house batteries. Battery charging does not begin automatically when AC power is available. The inverter must be turned on to begin battery charging. The time it takes to charge the batteries to a full state of charge varies greatly. It can take several hours or even days depending on the actual state of charge of the batteries and DC power consumption.

The inverter uses a three stage charging cycle. The first stage is "bulk" charge. The bulk charge will bring the DC voltage up high, initially between 14.2 and 14.6 Volts depending on ambient temperature. Voltage and current control the bulk charge cycle. The length of time the inverter is in the bulk charge cycle will vary with the state of charge of the batteries. The second stage is the "absorb" cycle. The battery voltages in the absorb cycle are the same as the bulk charge cycle between 14.2 and 14.6 Volts. The length of the absorb cycle is a timed event determined by the menu item Set Absorption Time under the menu heading number **9**, **Inverter Setup**. The final charging stage is the "float" charge cycle. Approximately 80% of the charging cycle is completed by this time. The float charge voltage is generally around 13.3 to 13.7 Volts. The last 20% of the charge cycle requires the most amount of time.

To Begin Battery Charging:

- Hook to shore power or start the generator.
- Press the **red** button on the inverter remote until the cursor indicates either **CHG** or **On**.

Battery Temperature Sensor

The inverter uses a battery temperature sensor to adjust charge voltage. When battery temperature rises, the BTS sends this information, registering as counts, to the inverter to decrease charge voltage. Voltage compensation with temperature variation is necessary to keep the charge voltage at optimum figures. The BTS should be adhered to a house battery. If the BTS is unplugged, the inverter uses the default setting of 77º F/25º C as a temperature reference point.

060085c

Pass-Through Power

Incorporated in the inverter is a double pole "pass-through" relay that trips when supplying AC power to the input terminals. This relay transfers AC power through the inverter to the AC sub panel supplying power to outlets and appliances. When AC power is supplied to the inverter, the internal battery charger will "ramp up" battery charging voltage. A time delay allows pass through AC power to the sub panel before ramping up the battery charge.

Meters Menu

The meter heading number **4** in the user section displays various voltage and amperage readings.

To access the meters:

- Scroll the menu using the **Menu Headings** buttons until meters heading number "**4**" displays on the screen.
- Use the **Menu Items** buttons to view the available meters.

NOTE:
The meters do not display a (+) symbol for positive values.

Explanation of the Meters

Inverter/Charger:
Amps AC - Displays the total number of AC amps used by the internal charger when hooked to shore power or operating from the inverter. This meter also displays the AC amp load when using the inverter.

Input Amps AC - Combined total of AC amps including the internal charger and pass through relay amps.

Load Amps AC - Displays the total number of AC amps of the pass through relay.

Battery Actual Volts DC - Displays the DC battery voltage at the inverter when hooked to shore power or operating the generator.
Battery Temp/Comp Volts DC - Displays the bulk voltage setting in the menu item **Set Bulk Volts DC** under the menu heading **Battery Charging Number 10**. Actual charge voltage will differ depending on ambient temperature. This is due to battery temperature compensation.

Inverter Volts AC - Displays the inverter's AC output voltage.

Grid (AC1) Volts AC - Not used.

Generator (AC2) Volts AC - Displays the incoming line voltage from either shore power or generator to the inverter.

Read Frequency Hertz - Displays the number of cycles per second of incoming power to the inverter.

Procedure to program the automatic generator start function:

There are several variables to the program. Some settings may work fine in one location, but not in another. The order of instructions will follow the sequence of the headings. Read all instructions thoroughly. This is not a substitute for the inverter manual.

Setting the Clock (24 hour):

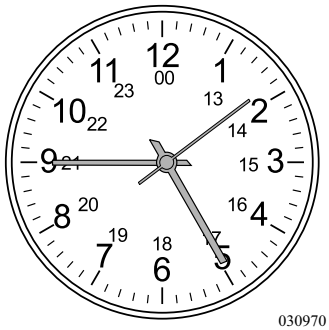

1. Using the **Menu Headings** buttons scroll to menu number "**6 Time of Day**."
2. Press the **DOWN** button on the **Menu Items** button, **Set Clock Hour** will display. Use the **Set Point** buttons to set the hour. Time changes in ten minute increments. The clock is a 24 hour clock. For example: 9:00 a.m. would be 09:00, 3 p.m. would be 15:00 and 7 p.m. would be 19:00.
3. Press the **DOWN** button on the **Menu Items** button, "**Set Clock Minute**" will display. Use the **Set Point** buttons to set the minute.
4. Press the **DOWN** button on the **Menu Items** button, "**Set Clock Second**" will display. Use the Set **Point** buttons to set the second.

Setting Generator Timer:

5. Press the **Menu Headings DOWN** button, Menu Heading number "**7 Generator Timer**" will display.
6. Press the **DOWN** button on the **Menu Items** button, "**Start Quiet Time h:m**" will display. **Start Quiet Time** is the time you want the generator to stop running or not start at or after quiet time begins. Using the **Set Point** buttons to set the hour and minute (24 hour clock) the generator will start quiet time.
7. Press the **DOWN** button on the **Menu Items** button, "**End Quiet Time h:m**" will display. **End Quiet Time** is the time you want the generator to begin operation. Using the **Set Point** buttons to set the hour and minute (24 hour clock) will end quiet time.

NOTE:
If desired the quiet time may be disabled. Set the Start and End Quiet Times to the same hour and minute.

The next set of instructions cover many variables to program the starting or stopping events of the generator. Many different starting conditions, length of operation or stopping conditions are available. If in doubt about changing any settings, the factory default settings are average settings and will work in many situations.

WARNING:
Use caution when programming the automatic generator start function. When this feature is enabled the generator may start at any time. Disable this feature when performing service to the generator or when stored in an enclosed building.

Gen Auto Start Setup:

8. Press the **red** and **green** buttons simultaneously to continue the generator **auto-start** programming. Heading number "**9 Inverter Setup**" should appear.

9. Press the **Menu Headings DOWN** button to scroll to heading number "**12 Gen Auto Start**" setup. Press the **Menu Items DOWN** button to advance through the next set of variables. Read all options first before setting any values of the **Menu Items** in Menu Heading number "**12**."

10. Press the **Set Point** buttons to change the settings of a Menu Item. **Menu Items** in **Menu Heading 12 Gen Auto Start Setup**:

Set Load Start Amps AC - Starts the generator when the AC current on the pass through relay of the inverter meets or exceeds the preset number of amps. For example: Setting the preset number of amps to 15 when hooked to a 20 Amp service starts the generator when the total current exceeds 15 Amps on the pass through relay.

Set Load Start Delay Min - This is the time delay period used with Set Load Start amps AC menu item. Example: setting the time period to 00:00 starts the generator immediately when the total number of amps exceeds the setting of menu item Set Load Start amps AC.

Set Load Stop Delays Min - This is the time period the generator continues to operate after the generator started from the setting in the Set Load Start amps AC menu item.

Set 24 hr Start Volts DC - Starts the generator if the voltage drops below the setting for a consecutive 24 hour period. For example: If the voltage is set for 12.5 Volts DC, and house battery voltage drops below 12.5 Volts for a continuous 24 hour period, the generator will start. This setting is helpful when storing the motorhome.

CAUTION:
It could be several days before the generator starts from the 24 hour voltage setting. Do not use this setting when storing the motorhome inside a storage building. Do not park the motorhome near dry grass.

Set 2 hr start Volts DC - Starts the generator if the voltage drops below the setting for a consecutive two hour period. For example: If the voltage is set for 12.0 Volts DC and house battery voltage drops below 12.0 Volts for a continuous two hour period the generator will start. This voltage setting is usually lower than the 24 hr start voltage setting. Primarily used when dry camping. An example would be a light load on the house batteries over time. Voltage drops at relatively steady rate until obtaining the preset voltage for two continuous hours.

Set 15 min start Volts DC - Same operating principle as the previous two menu items. This voltage setting is used when applying heavy loads to the house batteries. An example: Using many lights and the inverter to watch the television and operating the microwave. These types of loads rapidly deplete battery reserves. Battery voltage drops quickly when applying heavy loads to the house batteries.

Read 30 sec LBCO start VDC - Used with the menu item **Set Low Battery Cut Off VDC** under menu heading number "**9 Inverter Setup**." If house battery voltage drops to this point, the inverter waits 30 seconds before starting the generator.

NOTE:
This start setting overrides quiet time.

NOTE:
The generator will operate until the bulk and absorption cycles are complete if the generator started from one of the low battery settings.

Set Exercise period - Starts the generator regardless of any other setting. Periodically starts the generator for maintenance reasons. The generator should be operated at least every 30 days to lubricate the internal engine components.

Set Maximum run time h:m - Displays an error message if the generator operates longer than the time period set. This is only a message. To cancel the message return to heading number "**2 Generator Mode**." Use the **green** button to scroll to **Off**. Setting the time and minute to **00:00** defeats this function.

Gen Starting Details:

11. Use the down arrow on the **Menu Headings** button to scroll to menu heading number **13**, **Gen Starting Details**.

12. Use the **Menu Items** button to scroll down to "**Set Gen warm-up seconds**." Use the Set Points buttons to set the time to 90 seconds. If it is not set to 90 seconds, the generator will shut down prematurely.

13. Use the **Menu Items** button to scroll down to "**Set Post Crank seconds**." Use the **Set Point** buttons to set the time to 90 seconds. If it is not set to 90 seconds, the generator will shut down prematurely.

To Enable or Disable the Auto Gen Start Program:
After completing the programming schedule, use the green button to return to heading number "**2 Generator Mode**."

- **To Enable the Automatic Generator Start Feature:** Press the green button and scroll to **AUTO**.
- **To Disable the Automatic Generator Start Feature:** Press the green button and scroll to **OFF**.

Inverter Facts

Important Facts About the Inverter:

- The inverter will not charge automatically unless the remote is set to **CHG** or **ON** by using the red button.
- When the main battery disconnect switch is turned off, or if battery power to the inverter is removed, all program settings are lost. When battery power is restored, the inverter will need to be programmed.

If the Inverter Fails to Charge:

With AC available, if for any reason battery voltage dropped below 8.5 Volts DC before the remote was set to CHG or On, the inverter will not charge the batteries. The inverter requires at least 8.5 Volts DC to operate the internal "brain." Use an alternate method of inducing a charge voltage to the house batteries.

1. Hook to shore power or start the generator.
2. Start the engine. The alternator on the engine should supply a charge to the house batteries.
3. The LCD screen should display. Press the red button until the cursor is under CHG.
4. After the remote indicates the inverter is charging, the engine can be shut off.
5. If this method does not work a battery charger may be used. Observe polarity when hooking up cables. Reverse polarity will damage the inverter.

WARNING:
The gases around the battery can explode if exposed to flames, sparks or lit cigarettes. An explosion can result in injury or vehicle damage. Batteries contain sulfuric acid, which burns skin, eyes and clothing. Do not connect the end of the second cable to the negative (-) terminal of the battery when being jumped. A spark may cause an explosion of the gases that surround the battery. Connect only to chassis, away from the battery.

The AC distribution panels are located in the bedroom. The main 240 Volt AC panel receives power from the transfer switch, which is supplied by either shore power or the generator. The AC power is supplied to the 50 Amp main breaker first, then the power is supplied to the individual branch circuit breakers and the inverter. The panel label describes the breaker layout and the item, outlet or appliance to which they pertain.

The sub panel receives AC power from the inverter and supplies power to items which can be operated by the inverter. The AC power produced by the inverter supplies power to the sub panel only.

WARNING:
The 120/240 Volt AC panels contain high voltage which can cause serious injury or death. Before beginning any work or testing procedures involving the electric panels, or any of the branch circuits, be sure the motorhome is unplugged from shore power, the generator is not running and the inverter is in the off position. Certain testing procedures may require the AC power to be on. Only qualified personnel with electrical backgrounds should attempt any testing procedures.

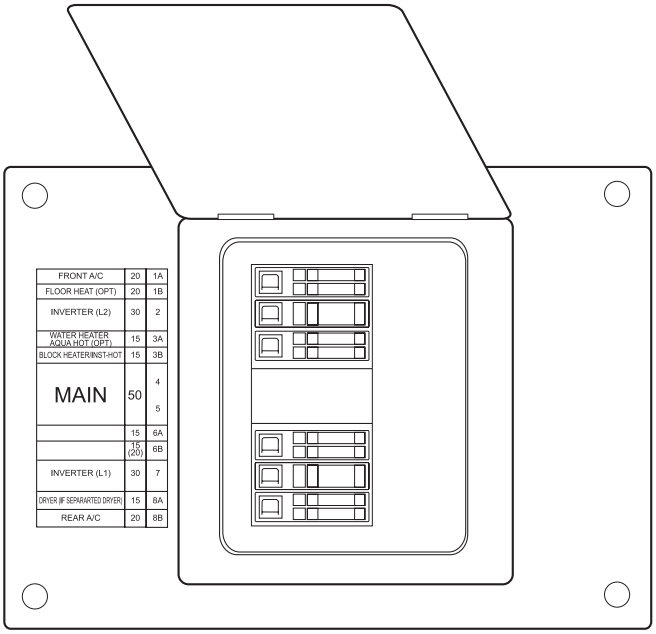

Main Panel: 240 Volt AC - Typical. 060143d

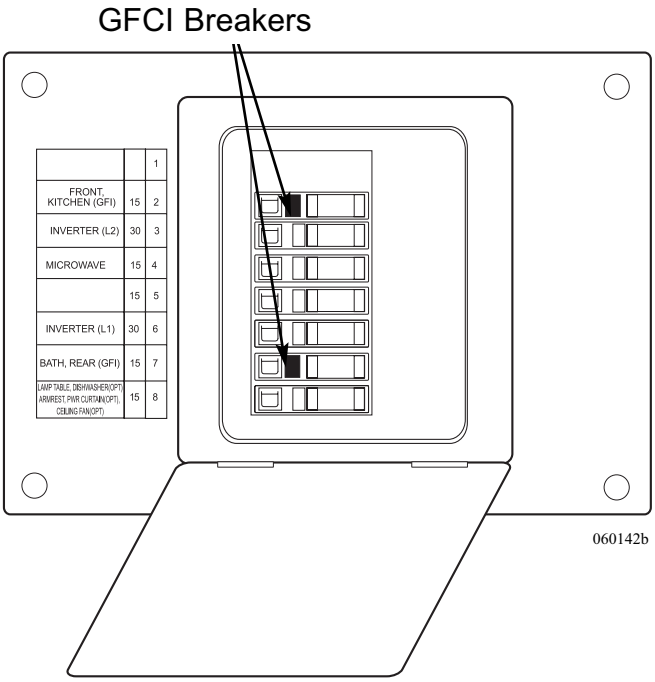

Sub-panel: 120 Volt AC - Typical.

Branch circuit breakers supply AC power to the different items or “loads.” Should a breaker “trip” from over current use, or a short circuit condition, the load should be tested or disconnected to determine the reason the breaker tripped. If no cause is found, or not readily apparent, reset the breaker by toggling the breaker to the **OFF** position, then back to **ON**. Should the breaker trip again after the load is re-applied, there may be a fault with that particular load. Do not continue to reset breaker until the problem has been diagnosed and corrected.

Circuit Breaker

The internal configuration of the circuit breaker is designed to trip when excess current causes the breaker to heat up. The trip action of the circuit breaker can occur within milliseconds due to the speed at which electricity can travel. Breakers are designed to operate at a continuous load of 80% of the breaker's rated capacity. For example: A breaker with a 20 Amp rating will operate a continuous 16 Amp load. This design leaves a small amount of working capacity within the breaker. When an inductive load is applied, such as when an electric motor turns on, the motor starts to spin and current consumption may momentarily exceed the rated capacity of the breaker. As the electric motor comes up to operating speed, the electric motor's current consumption will decrease. The AC current load then falls back into the breaker's rated 80% set point. This electric principle should be kept in mind when using anything other than 50 Amp shore service and using appliances with electric motors, such as air conditioners. When using outlets, care should be considered when applying loads such as electric motors, heaters, coffee makers, toasters, hair dryers or other large current consuming loads. The current rating is usually stated on most electrical items. The current rating will either be rated in amps or watts. Current ratings stated on electrical items will change slightly with voltage fluctuations. As voltage increases, current consumption decreases. As voltage decreases, current consumption increases. This may explain why in some instances items operated at borderline voltage to current tolerances may seem fine in one location but problematic in another.

NOTE:
To calculate watts to amps simply divide the watt figure by the voltage of which the item operates from. For example: The electrical item is rated at 1370 watts. Divide that by the operating voltage of 115 Volts which equals 11.913 Amps. Use this formula to calculate the amount of load to the available power supply.

GFCI BREAKERS & OUTLETS

A ground fault circuit interrupter (GFCI) can be found in two different types of applications. One type is incorporated in a breaker used in 120 Volt AC breaker panels, the other is incorporated in an outlet.

The GFCI, whether it is a breaker or an outlet, offers two types of protection. One type of protection is from over-current or shorts to guard against hazardous ground fault currents that can result in injury or death. Ground fault currents are currents that flow from the “hot”or power terminal through a person to the ground. For example, touching a faulty appliance while standing on or making contact with an electrical ground such as a water fixture, bath tub or the earth. If the device has been properly installed, it will offer protection against the type of shock that can result from faulty insulation, wet wiring from inside an appliance, or any device or equipment plugged in or wired to that circuit. The ground fault portion of the outlet or breaker uses sensitive electronics inside the outlet or breaker to detect a ground fault problem. The electronics monitor the normal current of power, flowing to the hot or black wire through the load (eg. a light bulb or appliance) and coming back on the neutral, or white wire. If just a small amount of the current comes back on the safety ground wire, the electronics will trip the breaker or outlet, stopping the flow of electricity. The amount of current it takes to trip the device from a ground fault varies slightly from the different outlet or breaker manufacturers (approximately 30 milliamps or less).

Electrical shocks resulting from ground faults can be felt, but such a shock is considerably less than one without ground fault protection. People with heart conditions, or other conditions that make them susceptible to shocks, can still be seriously injured. A GFCI outlet or breaker will not protect against shock from a normal current flow. For example, a shock from touching both metal prongs of an electrical cord or appliance while plugging it in.

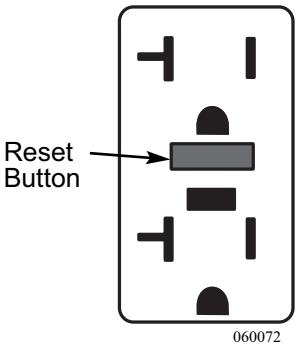

GFCI Outlet

GFCI Breaker

<u>WARNING:</u>
If a breaker or outlet continually trips, DO NOT continue to reset breaker or outlet until the problem has been identified and corrected.

<u>NOTE:</u>
The ground fault outlet or breaker should be tested once a month to ensure it is operating. Use the TEST button on the outlet or breaker. It should trip with an audible “click.” The breaker or outlet will not trip if AC power is not present at the device. If power is present and the device will not trip, replace it before using that circuit.

<u>NOTE:</u>
One milliamp is 1/1000 of one amp.

DISTRIBUTION PANEL - HOUSE 12 VOLT

The 12 Volt DC house distribution panel contains fuses (located on the Multiplex module board) that protect the electrical circuits. These fuses are a standard automotive type.

Fuse	Amps	Circuit	Color
1	5	Vanity Fan	Orange
2	5	Lavatory Fan	Yellow/Black
3	20	Bedroom Pin Lights	Green
4	2	Bedroom Ceiling Fan	Blue
5	20	Galley & Pantry Fluorescent - Kool-A-Matic	Purple/Black
6	3	Multiplex CPU Power	Red
7	10	Toilet & Satellite	Red
8	5	Cockpit Blinds	Red
9	2	Roof A/C Power	Blue/White
10	2	Doorbell	Purple
11	30	Electric Sofa - Option	Green/Black
12	15	Ozone Water Filter - Option	Black/White

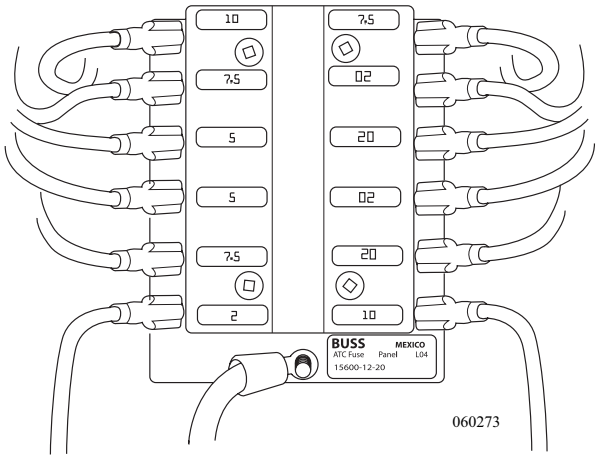

ATC Fuse Panel: Located in the hall or bedroom closet.

Multiplex

The Programmable Multiplex Control (PMC) is a communications and switching system, flexible both at the point of design and when the system requires functional updates. The Multiplex system allows the transmission of multiple "bits" of information down a single wire. Modules communicate with each other. The Multiplex system allows the Central Processing Unit (CPU), modules and switch panels to be wired together using two small wires. All input or switch information is gathered through the remote modules and directly communicated to the CPU. The CPU then interprets the inputs, determines the states of all outputs and communicates that information to the remote modules via the PMC communications link.

Some switches operate items directly, such as a light, or the water pump. Other items are programmed to go through a series of checks before the switch will operate the item, such as the slide out. When the switch is pressed information travels on the yellow data transmission wire. The brown wire is data ground. The red wire is 12 Volt DC power.

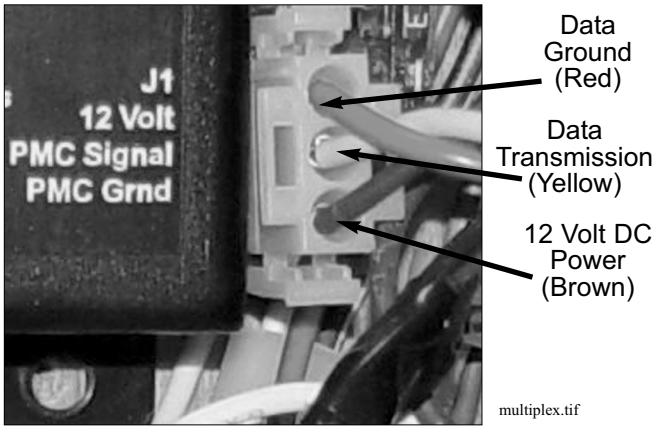

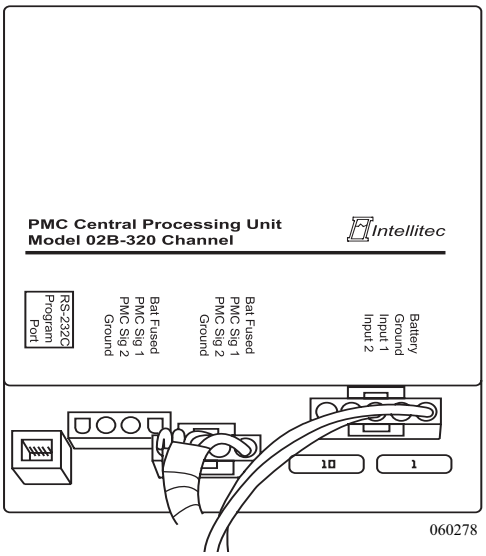

Central Processing Unit

Central Processing Unit:

CPU, the main component of the programmable multiplex control, controls remote I/O (Input/Output) modules through the multiplex communications system. This system allows the CPU, I/O modules and switch panels to be wired together with two small gauge wires. When a switch is pressed information is gathered through the remote module to the CPU. The CPU, programmed with Windows based software, interprets the information and sends it to the remote module via the PMC communications link.

Input/Output Modules:

Provides power fusing, switches loads to the battery, and provides distribution in one module. The module also has input connections for rocker, limit, or sensor switches. Each input can be configured as either a switch to ground, or a switch to battery. All input information is directly communicated to the CPU and all the relays are controlled by the CPU via the PMC communications link.

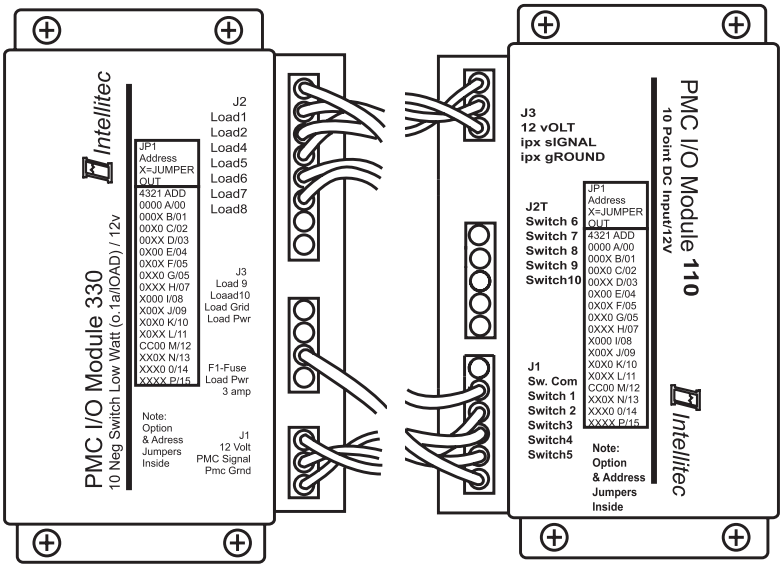

330 I/O Modue *110 I/O Modue*

Output Module:

The CPU utilizes input information from other modules on the system and via the PMC communications link, controls the loads of these modules.

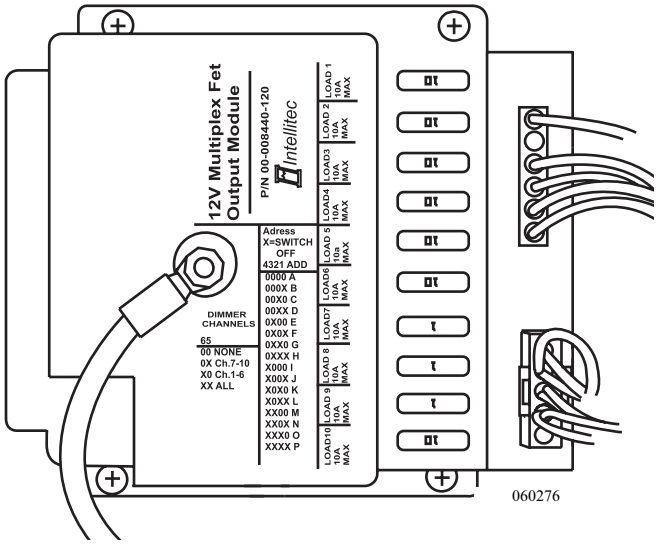

Output Module

Circuits on Relays:

1. RY-14: T.V. Lift Motor
   RY-6: Generator Stop
   RY-7: Generator Start
   RY-16: T.V. Slide Motor (to RY-15)

2. RY-15: T.V. Slide Motor (from RY-16)
   RY-1: Aqua Hot 110 Volt
   RY-2: Aqua Hot Diesel
   RY-3: Aqua Hot Blower

3. RY-4: Fantastic Fan Vanity
   RY-5: Fantastic Fan Lavy
   RY-12: Shade Motor D/S
   RY-13: Shade Motor D/S

4. RY-10: Shade Motor D/S
   RY-11: Shade Motor D/S
   RY-8: Shade Motor P/S
   RY-9: Shade Motor P/S

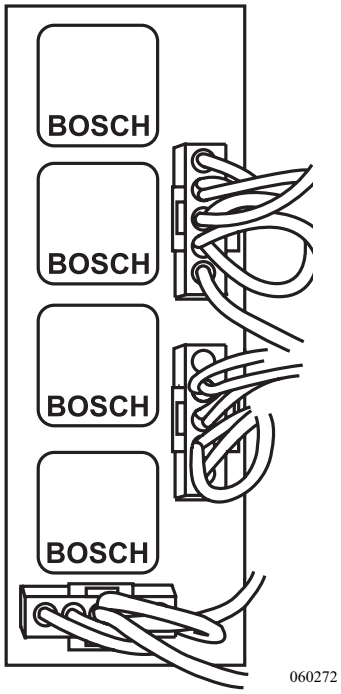

Typical Relay Board

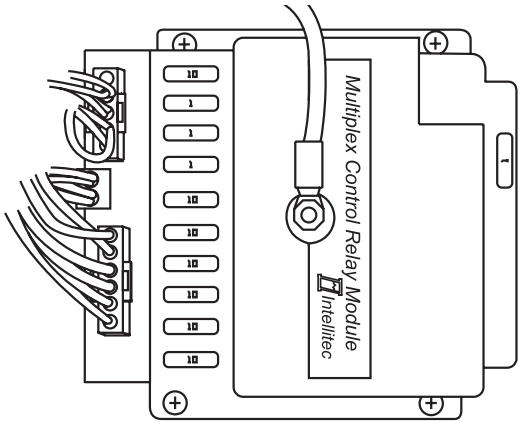

Control Relay Module 060274

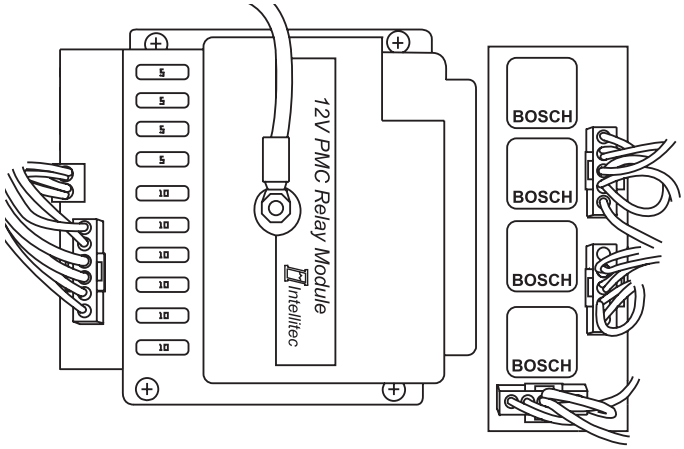

PMC Relay Module 060272

ATC Fuse Panel:

The 12 Volt DC house distribution panel, located on the Multiplex module board, contains fuses that protect the electrical circuits. These fuses are a standard automotive type.

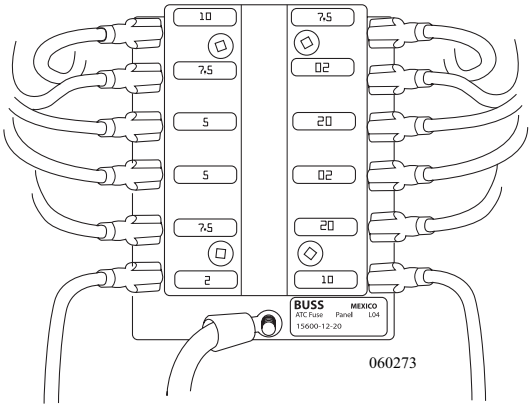

ATC Fuse Panel

FUSES

The 12 Volt DC fuses, located in this distribution panel, service the interior house lighting, ventilation fans, monitor panel, furnace and water heater. Should a fuse blow it will be evident by the broken metal strip located in the center of the fuse. Replacement fuses should be of the same amperage. If a higher rated fuse is installed it can damage the wiring. Fuse current set points follow much of the same electrical principle as the 120 Volt AC breakers. Using 12 Volt DC as the electromotive force can make it more susceptible to outside influences, such as corrosion from weathering or oxidation.

The large variety of applications this voltage can be used in makes it a staple for most of the recreational vehicle and automotive industries. The danger from shocks with this voltage is minimized, but can still occur. A good example is when a magnetic field is generated, then collapses when the power supply is cut. The result is a discharge that can reach tens of thousands of volts for a short time period. Care should be used when working with this voltage as current values can be quite high, like in the case of battery cables.

Shorting a battery cable to ground with a battery at a reasonable state of charge can result in a fire or serious personal injury from a burn.

AMPERAGE	COLOR
1	BLACK
2	GRAY
3	VIOLET
4	PINK
5	GOLD
7.5	BROWN
10	RED
15	BLUE
20	YELLOW
25	CLEAR
30	GREEN

Amperage Chart. amperagechart

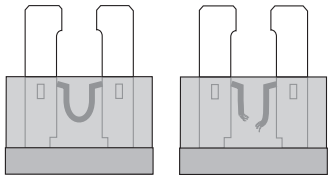

ATO Fuse 060086B

Tools of the Trade

One of two testing tools may be used for testing electrical circuits, depending upon personal preference. The testing tool is a valuable piece of equipment when it comes to determining electrical problems.

Test Light 090333e

Test Light:

One of the most widely used tools for testing a 12 Volt DC problem is the test light. Test Lights come with a light bulb, probe and ground clip. The test light may be the better suited tool if a 12 Volt DC light is not working.

Volt Ohm Meter:

A Volt Ohm Meter (VOM) is used to perform a multitude of tests when exact values are needed for evaluation. These meters come in analog or digital format, measure a wide scale of voltages and perform a variety of functions. In the case of a charging system problem the meter may be the tool of choice.

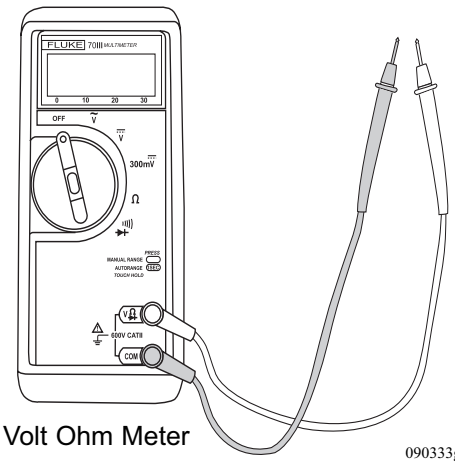

Volt Ohm Meter 090333g

Knowing When to Say When

Should it become necessary to use testing tools, take precaution and consider three things:

1. Recognize when a problem is beyond your skill level. Attempting a repair without knowledge of it can lead to major problems.
2. Would the repair be cost effective and cause less problems than if it were repaired by a professional at a later date? How many times has a repair seemed simple enough only to find it has taken an entire day?
3. Would the current situation be potentially dangerous if left to be repaired at a more convenient time?

NOTE:
Check all related fuses before assuming you have encountered an electrical problem or situation. Spare fuses should be kept on hand and can be purchased from auto parts stores. A fuse description label is on the distribution panel cover.

WARNING:
If a fuse blows replace the fuse with same amperage rating and type. Installing higher amperage fuses can damage the wiring or the item the fuse is protecting, or may cause a fire. If the fuse repeatedly blows after replacing it do not continue to replace it. Have the problem diagnosed and corrected by a qualified technician.

BATTERY
How It Works

Batteries come in different sizes, types, amp hours, voltages and chemistries. There are nearly as many descriptions of battery types and how they should be used as there are people willing to offer advice on them. Although it is not possible to cover batteries in their entirety, there are guidelines that can be followed to ensure that the batteries are well maintained.

The operation of the battery is based on a chemical reaction. The battery is a container of lead plates, insulators and a solution of distilled water and sulfuric acid known as “electrolyte.” The 12 Volt DC battery is actually six batteries in one case. When charged, each cell has a voltage of 2.1 Volts DC. When six cells are hooked together this makes a 12.6 Volt DC battery (fully charged).

Electrons are stored on the negative plates. When a load (eg. a light bulb) is placed between the positive and negative terminals, the electrons move from the negative plate to the positive plate through the “load” and then back to the ground terminal. At this time the sulfuric acid leaves the water and adheres onto the plates of the battery. The electrolyte solution keeps the electrons from flowing while the battery is in the “at rest” position.

Charging the battery moves the sulfuric acid back into solution with the distilled water. A battery left in a low or discharged state will cause the acid to "sulfate." In attempting to recharge the battery, the acid has become hardened and no longer will leave the plates and enter into the liquid solution with the distilled water. The lowered acid to water ratio has a direct affect on the battery's ability to release the stored electrons (power output) and the length of time it can perform (reserve capacity). Batteries left in a discharged condition will readily freeze, causing the case to crack and allowing the solution to spill. The plates can also warp. This is why batteries should not be left or stored in a "discharged" condition.

House Batteries

House batteries are designed for use with 12 Volt DC operated lights, appliances and inverters. These are available in many sizes and types.

Types of House Batteries:
- Liquid Lead Acid (LLA)
- Absorbed Glass Mat (AGM)
- Gel Cell

NOTE:
Tap water contains minerals which can alter battery chemistry and ruin the battery. Use only distilled water when refilling the LLA battery.

Slide Tray Operation:
The slide-out battery tray is secured in place by a locking mechanism at the front of the tray. To slide the tray out, lift up on the handle and pull until the tray stops. To secure the battery tray, push it back in until the tray latches.

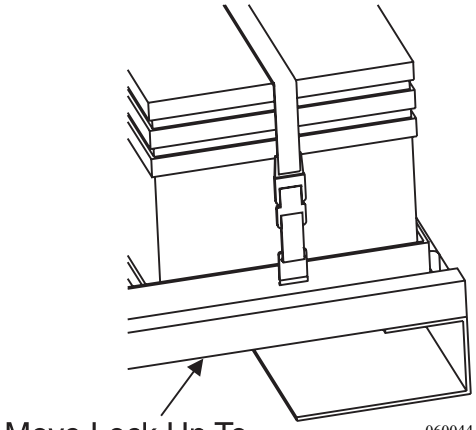

House Battery Tray located at rear curbside comparment.

Slide Tray Maintenance:
The battery tray slide will occasionally require lubrication. When performing maintenance to the batteries, remove old lubricant and dirt from the battery tray slide with solvent, brake cleaner or equivalent. Do not allow any of the cleaning solution or battery acid by-products to spatter onto and damage the painted surfaces. Lubricate all moving parts of the battery tray slide with white lithium grease or Kwikee brand spray lubricant.

NOTE:
Driving without the tray secured can result in damage.

CAUTION:
Many types of petroleum based products or battery by-products can damage the paint finish. Do not allow these types of chemicals to get on the paint finish. If the chemicals splatter on to the painted surfaces, immediately rinse the surface using plenty of water and a mild automotive detergent.

Battery Maintenance

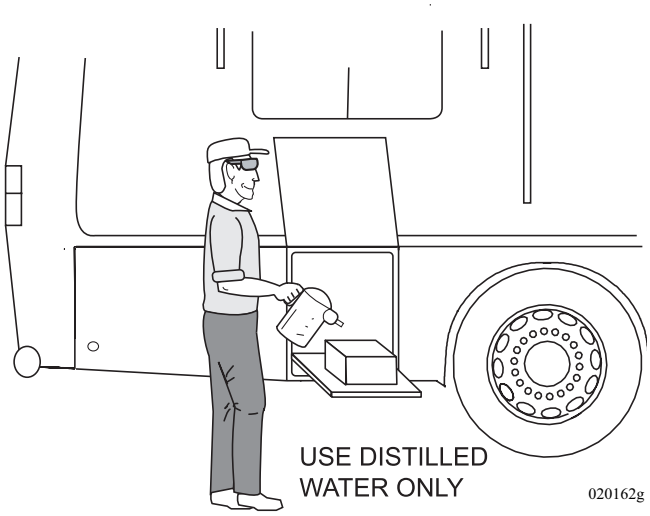

Liquid Lead Acid (LLA) battery cells should be checked at least once a month. The level should be above the top of the plates, but not overfull. The electrolyte level should be approximately 3/8” below the well to allow room for expansion while the battery is being charged. Over-filling the battery will allow the electrolyte solution to boil or gas out of the battery cap. Remember to use only distilled water to refill the battery. A battery with a low electrolyte level will rapidly boil out the water once the plates have been exposed to air.

Periodically check the batteries for corrosion and cracks. Replace vent plugs that are cracked or missing. Keep the top of the batteries clean. The accumulation of electrolyte and dirt may permit small amounts of current to flow between the terminals, which can drain the battery.

Check the battery connections for tightness and corrosion. If corrosion is found, disconnect the cables (mark cable locations) and carefully clean them with a mild solution of baking soda and water, or an aerosol product specifically designed for battery maintenance. Do not allow cleaning solution to seep into the battery and damage the electrolyte balance. Use water to rinse the top of the battery and surrounding area when done. Carefully hook the cables back to the battery. The battery cable to battery terminal connections should be metal to metal. Coat the terminals with petroleum jelly or an anti-corrosion grease.

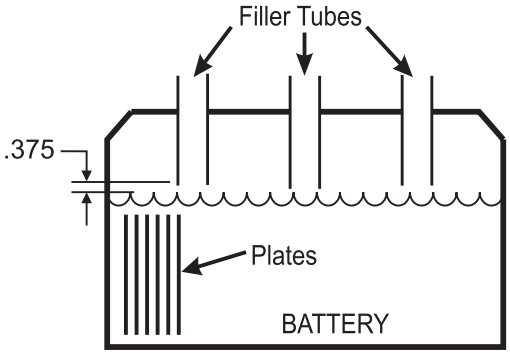

Battery State of Charge	Spec. Gravity	Voltage
100%	1.265	12.7
5%	1.225	12.4
50%	1.190	12.2
25%	1.155	12.0
Discharged	1.120	11.9 or Less

NOTE: The distilled water level in battery should be 3/8" below the filler tube.

020034C

WARNING:
Liquid lead acid batteries produce hydrogen gas while being charged. This is highly explosive. Do not smoke around batteries and keep all source of ignition or flames away from batteries. The hydrogen gas may explode resulting in fire, personal injury, property damage or death.

Testing the Battery

A battery can be tested and monitored several ways. The Aladdin System shows the voltage of the house batteries at a quick glance. The most efficient way of testing the LLA batteries is to check the electrolyte solution using a hydrometer.

Checking Electrolyte Level:

Hydrometers are available in different types, such as cylinder graduation (shown here) or floating ball types. Hydrometers can be purchased from most auto parts stores. The hydrometer tests the battery electrolyte solution, measured in specific gravity. Distilled water has a specific assigned gravity of 1,000. The hydrometer is calibrated to this mark. Pure sulfuric acid has a specific gravity reading of 1,840. The acid is 1.84 times heavier than water. The electrolyte solution is about 64% water to 36% acid (fully charged battery). Hydrometers with cylinder graduation are graphed and the exact state of specific gravity can be determined.

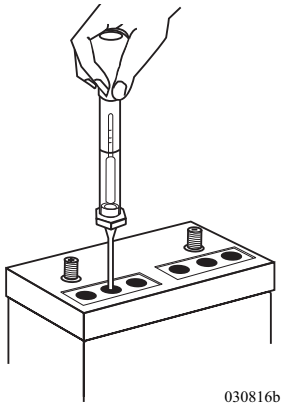

Hydrometer (Cylinder Type) testing a LLA type battery.

Temperature and recent battery activity (charging or discharging) affect the hydrometer readings. It is best to check the battery when it has been "at rest" for at least three hours, although readings taken at other times will give a "ballpark" figure. When using the hydrometer, draw the electrolyte solution up into the tube. Allow the hydrometer to attain the same temperature as the electrolyte solution. Note the reading for that cell. Complete the same test for the rest of the cells on that battery bank.

The hydrometer is calibrated at 80° F. Temperature affects the hydrometer readings. The higher the electrolyte temperature, the higher the specific gravity reading. The lower the temperature, the lower the specific gravity reading. Add or subtract four points for each 10° variance from the 80° F chart. Readings between cells should not vary more than 50 points.

If one cell in a particular battery bank being tested is at a 50% state of charge while the others are indicating a full charge, charge only that battery to see if the low cell will come up. At the same time, do not over charge the "healthy" cells.

If the low cell does not come up after charging, this battery can damage the rest of the battery bank and should be replaced. An accurate digital volt meter + - .5% will also give an indicator of the battery's state of charge.

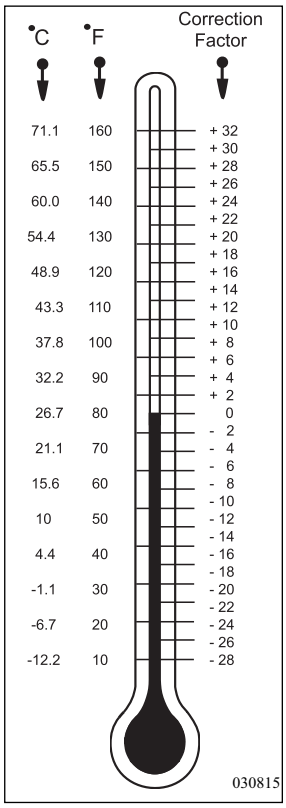

Temperature Correction Chart.

Placing a Load:

Another test that can be performed is to place a specific load on the battery for a predetermined length of time equal to that particular battery's rating. This machine is usually an adjustable carbon pile that can vary the load being applied to the battery(s) while monitoring voltage to see if they will perform to their specific rated capacities.

NOTE:

See the chart for temperature compensation. Liquid levels should be even between the cells of the battery being tested as it will affect the accuracy of the test.

WARNING:

Sulfuric acid in the batteries can cause severe injury or death. Sulfuric acid can cause permanent damage to eyes, burn skin and eat holes in clothing. Always wear splash-proof safety goggles when working around the battery. If the battery electrolyte is splashed in the eyes, or on skin, immediately flush the affected area for 15 minutes with large quantities of clean water. In case of eye contact, seek immediate medical aid. Never add acid to a battery once the battery has been placed in service. Doing so may result in hazardous splattering of electrolyte.

Battery Voltage & Current

Why does the voltage on a discharged battery measure the same as a fully charged battery until the loads are applied? The simple answer to this might go as follows: A battery creates electrical power by converting energy from a chemical reaction into electrical energy. As this reaction slows down the battery voltage will drop. In a lead acid battery the electrolyte conductivity (how well electrical current can flow through it) changes. The same current may be available but the rate of the reaction decreases, causing a voltage drop.

Another way of looking at this is to use the analogy of a water pump (a battery is an electric pump). The pressure in psi (pounds per square inch) that a pump delivers is like a battery's voltage. The volume of water in GPM (gallons per minute) is like the electrical current. Look at a 12 psi pump with no loads (the pump is running but the outflow valve is turned off). The pump will run and the internal pressure of the pump will build up to some point higher than 12 psi. When the valve is opened, and the water is free to flow into the loads, the pressure will drop to the rated output pressure of 12 psi, but only if the load is not too big. If the pump is designed to maintain 12 psi at 15 GPM, and a load demanding 20 GPM is connected, the pump will not be able to keep up and the pressure will get sucked down to a lower psi. If the load is reduced or removed the pump will catch up and return to its rated 12 psi pressure. If the pump has an infinite source of water, such as a lake or the water utility (this is like the grid, no battery), the pump will never run out of pressure.

If the pump never runs out of pressure, and is operated at or below its 15 GPM level, it will hold 12 psi. However, a pump that is connected to a water tank with a finite capacity will start to lose the ability to hold pressure as the level of water in the tank drops. Think of siphoning water from a bucket. As the level of the water drops, the volume of water exiting the siphon slows down.

When the tank is full it is capable of feeding more "pressure" to the pump inlet due to gravity, and the pump always has enough water available to maintain its rated pressure and volume. However, if the water tank gets low the pump will not have enough water volume coming in to maintain 12 psi at 15 GPM. If the loads are removed from the pump by closing the valve on the outflow, even with low pressure in the tank the pump will eventually pressure up to 12 psi. It will just take it longer to get there. When the valve is opened the pump will sustain 12 psi for a brief period, but since the tank is no longer feeding the pump as fast as needed the pressure will eventually drop. This analogy can be restated by replacing the pump with a battery, pressure with voltage, volume with amps, outflow valve with a switch, water with electricity and the water tank with the battery electrolyte.

The level of the tank could be thought of as the rate of the reaction occurring in the electrolyte. When the battery is fully charged the electrolyte has an excess of reactions taking place to feed the battery terminals. This tapers off with time as the electrolyte is spent, so maintaining voltage becomes possible. With no loads the discharged electrolyte will be capable of producing close to the rated voltage, but only after a period of time has elapsed for enough of a reaction to take place to bring the voltage back up. Hopefully, this explanation will clarify why a battery measured at rest can indicate close to its rated voltage but will not run a load.

Calculating Run Times:

Calculating run time figures when operating 120 Volt AC electrical items with an inverter can be exponential due to battery characteristics. Flow characteristics of electrons vary with different battery types and chemical compositions. Deep cycle batteries are generally designed to slowly release a majority of their charge capacity. Deep cycle batteries are rated in amp hours (Ahrs) with the discharge occurring over an extended period of time before the battery is charged. Engine starting batteries are designed to quickly release large amounts of current for short durations, without depleting battery reserves. Commercial type batteries bridge the gap of deep cycle and engine batteries. Commercial batteries release medium amounts of current over a longer period of time but they are not designed to cycle their charge capacity.

The working range of a deep cycle battery is between 50 and 100% state of charge (SOC). Deep cycle batteries should not be cycled below 50% state of charge. Discharging a deep cycle battery below 50% state of charge shortens the life of the battery. Deep cycle batteries use an amp hour rating which is usually calculated over a 20 hour discharge interval. For example: A deep cycle battery with a rated capacity of 100 Ahrs. is designed to release current at the rate of 5 Amps per hour. Multiply a 5 Amp load over a 20 hour discharge period equals the rated 100 Ahr. capacity. These discharge figures are calculated with the battery starting at 100% state of charge with the battery at 80º F when the discharge cycle begins. However, increasing the discharge load applied to the battery from 5 Amps to 10 Amps on a 100 Ahr battery does not yield ten hours of discharge time. This is due to the internal reactions which occur when a battery is discharging. Actual discharge time for a 10 Amp load may be closer to eight hours of discharge time. Increasing the load applied to the battery to 20 Amps will not yield five hours discharge time but may be less than three hours. It might be understood as a point of diminishing return.

Calculating applied loads to an inverter to approximate run time from the battery amp hours available is not an equal trade up when voltage is inverted and amperage is calculated. When the inverter is used to operate an AC load it uses approximately ten times the DC current needed from the battery when inverting 12 Volts DC to operate the 120 Volt AC item. There is also a small efficiency loss of about 10% when inverting. For example: When using the inverter to operate an AC electrical item, which has a current draw rating of 2 Amps, the inverter will use over 20 Amps DC power from the batteries.

Determining Current Consumption:

First determine the amount of current used by an AC item. For example: The television is rated at 200 watts at 120 Volts AC. Calculate watts to amps. Divide 200 watts by the operating voltage of 120, this equals 1.6 Amps. Multiply 1.6 Amps AC current by a factor of ten the inverter will use, this equals 16 Amps DC battery current. Add the revised 10% efficiency loss figure, this calculates to a total of 17.6 Amps DC. If the battery bank capacity is rated at 500 Ahrs., actual elapsed time to the suggested 50% state of charge would net viewing time for the television at approximately 13 hours in ideal conditions.

The run time figure will vary greatly with the actual state of charge of the battery bank when the discharge process begins. Ambient temperature, combined with other working loads, such as lights and parasitic loads applied to batteries, affect run times. Calculating the exact run time is not precise due to all the variables and equations involved; however, an approximate time figure can be obtained. Proper battery maintenance and charge cycles affect battery performance. Observe the battery condition with hydrometer and voltage readings. Use only distilled water when filling batteries. To achieve the highest quality of battery performance and longevity maintain the batteries in their proper operating range.

SOLAR PANEL

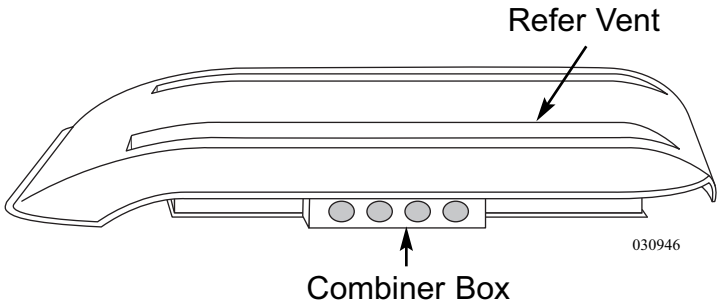

The solar power system consists of one solar panel with mounts, a Combiner box and a charge controller that can handle up to five 100 watt solar panels.

Solar Panel:

The solar panel is a laser-grooved, buried-grid panel that is capable of delivering about five amps of charge per hour, per panel, in full sunlight. One 100 watt solar panel delivers enough power to offset the normal day-to-day drain on batteries caused by various parasitic electrical loads, such as transmission memories, alarm systems, natural self-discharge of batteries and other like items. Adding a second, third or more solar panels (up to five, depending upon needs and electrical consumption) can replace what is drawn out of the batteries from the operation of lights, water pumps, inverters, etc., while dry camping.

NOTE:
The solar panel needs to be cleaned monthly. The solar panel may need to be cleaned more frequently depending on weather conditions.

Combiner Box:

The Combiner Box, located on the side of the refrigerator vent on the roof, has four standard "knock outs" to allow for installation of additional solar panels.

Charge Controller

The Charge Controller can be set to accommodate either Flooded Lead-Acid (LLA) or Absorb Glass Mat (AGM) batteries. The Charge Controller is located in the large pass-through bay. The controller is used as a heat sink for the electronics attached to it. It is normal for the controller to become warm to the touch, especially when processing higher amperage. The charge controller will automatically enter Thermal Shutdown if it gets too warm. Status of the charge controller is viewed through the Aladdin System electrical status display.

The RV-45D Charge Controller includes the following:

- **Dual Battery Bank Charging -** The controller automatically sends charge to both the House and Engine batteries at the same time.

- **Pulse Width Modulation -** Delivers all the available charging amperage until the batteries reach their set point voltage (Bulk) and then it begins to taper off amperage (Absorption) until it is reduced to all that is needed to simply hold the batteries at their set point voltage (Float).

- **Temperature Compensation -** Protects the batteries from excess water loss and/or plate sulfating by automatically compensating for temperature changes, and adjusting the charging voltage accordingly.

- **Automatic Equalization (Only when set to Liquid Lead-Acid Batteries) -** Activated once per day. Allows weaker battery cells a chance to catch up with stronger cells. To assure all LLA battery cells are at an equal state of charge, a delay timer is activated to allow a short duration of slightly higher voltage.

- **Automatic Float (Only when set to Absorbed Glass Mat Batteries) -** Resets the charge parameters to work with AGM batteries and removes the equalization cycle. AGM batteries are sealed and are not designed to withstand the higher voltage reached during equalization. The feature also changes Float setting from 14.2 to 13.4 Volts DC, which is the AGM battery manufacturer's recommendation.

<u>CAUTION:</u>
The Charge Controller may be warm to the touch. This is a normal function of the Charge Controller.

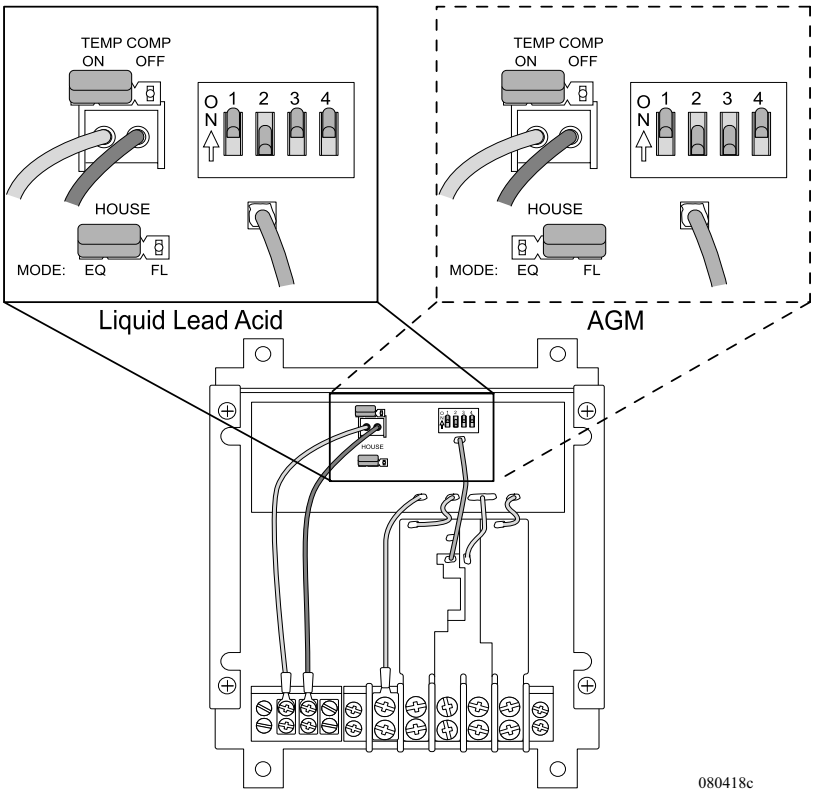

Charge controller located in curbside bay, shown with cover removed to change battery setting.

Solar Panel Care

A critical part of maintaining the solar electric battery charging system is to keep the panel clean. The amount of power that a panel will produce is directly related to the intensity of sunlight. A dirty panel will allow less light to reach the panel, resulting in less power produced. A single layer of dust or road grime can reduce the power output by 15 to 25%. Leaves and debris that can cover two or three of the 36 individual cells can reduce output power by 50 to 75%.

Use of the basic maintenance tips, regular inspections and regular cleaning will assure maximum charging from the solar charging system. To clean the panel, use a non-abrasive cleaner and paper towels. The surrounding environment, and the amount of road dust encountered, will determine how frequently the panel should be cleaned.

Tips to Follow:

1. The panel should be cleaned if a film or a layer of dust is on the windshield.
2. On a bright sunny day, charging amps should be 3.5 to 5 Amps per panel.
3. High winds can blow dust and debris around causing dirt build up. Frequently **inspect** the panels and clean as necessary.

CAUTION:
To avoid arcing at the battery connector when replacing batteries or performing battery cable maintenance, be sure to remove the fuse for the solar panel charge controller, or cover the solar panel, to stop the production of electricity at the source.

LIGHTS - INTERIOR HALOGEN

To Replace a Bulb:

1. Rotate the light cover counter-clockwise and remove.
2. Carefully grasp bulb and pull from socket.
3. Use a clean cloth or piece of tissue to grasp new bulb. Do not touch bulb directly as this can cause a "hot spot" and result in immediate bulb failure.
4. Align contacts of bulb with terminals in fixture base. Insert bulb until contacts are firmly seated.
5. Align tabs in light cover with slots in fixture base. Rotate lens clockwise until cover locks in place.

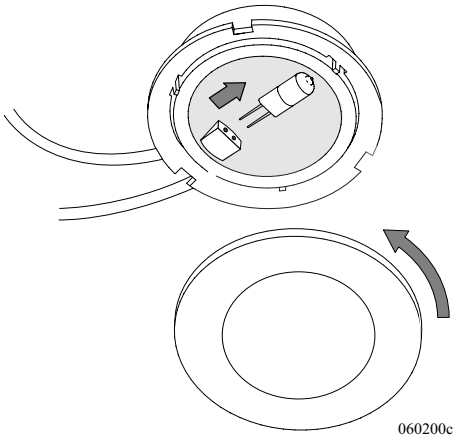

CAUTION:
Do not touch halogen lighting while on. They can cause a burn. Do not touch replacement bulbs. Oily hands can cause a "hot spot" to occur. If the bulb is touched, allow it to cool and clean the bulb with alcohol.

MAP LIGHTS

Operation:

Turn the light on and off by aligning the pointer on the back of the light with the ON and OFF indicator on the front portion of the light.

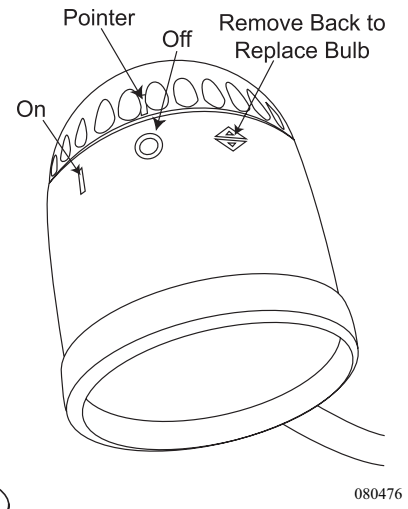

To Replace a Bulb:

1. Align the pointer on the back of the light to the position to remove the cover.
2. Remove cover and lift bulb from holder.
3. Replace with a 12 Volt 4 Watt type 1816 bulb and install cover by realigning the pointer to the same location. Turn cover to OFF or ON position.

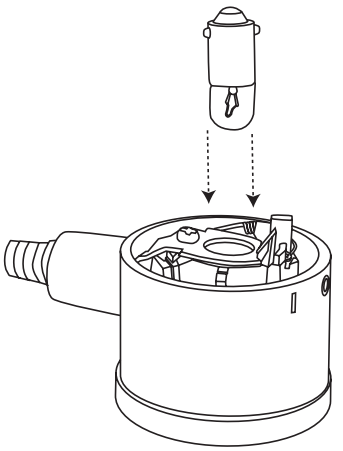

If Map Lights Fail to Operate:

- Ensure Battery Cut-off switch is turned on.
- Check fuses in front electrical bay on the roadside.

BULB USAGE - INTERIOR

INTERIOR BULB CHART	
LOCATION	**BULB NUMBER**
Galley overhead/ H2O Ceiling	GE F15T8- CW
Dash Light	161
Round 3" Halogen	12V 10W 15828
Rope Light	LITCO 31-120-40
Entry Handle Light Tube	MP# 16615157
Map Light	12V 6W 38886K
Stepwell Lights	Vista Manufacturing 90416
Dinette Lamp	12V 912 or 921
Washer/Dryer Cabinet	1141
Bedroom Lamp	1003

ALL ELECTRIC (Optional)

The material in this section covers items that are particular to the All Electric motorhome. This is meant to augment the rest of the manual and therefore is not a substitute. The key for the All Electric motorhome electrical system to function properly is understanding how the AC and DC electrical systems interface. Become familiar with the inverters and programming the remotes. The generator must be operating properly for the Automatic Generator Start feature to function. The charge condition of the house batteries is equally important. Keep the inverter manual in the motorhome as a reference.

The motorhome does not have LP-Gas and operates much differently than the standard LP-Gas equipped motorhome. All appliances operate from AC, DC, diesel or a combination thereof. For the electrical system to function, the 120 Volt AC and 12 Volt DC power supply sources must be operating properly, especially the generator. When shore power is not available, appliance operation relies on the generator, inverter or batteries for power. The inverter Automatic Generator Start feature should be enabled when shore power is not available to help prevent dead house batteries. Using the inverter as the 120 Volt power source can quickly consume battery power. Do not allow the batteries to discharge lower than 50% SOC (State of Charge). The batteries ability to obtain a full state of charge, and the number of discharge cycles, reduces each time a severe discharge occurs. Eventually the batteries will no longer accept a charge, resulting in electrical system malfunction or total system failure.

The SOC of the batteries determines the length of time the inverter can operate from the batteries. Calculate inverter run time or DC power loads. When dry camping closely monitor interior light use. Some lights operate only from 120 Volt AC.

NOTE:
One inverter will need to remain on to operate the refrigerator when dry camping

CAUTION:
The shore power requirement of an All Electric motorhome, in most situations, will exceed 20 Amp shore power service. It is strongly recommended to hook to 30 Amp service or start the generator.

Overview

The motorhome is equipped with two inverters. The two inverters, combined with the house battery bank, supply an ample amount of power when the system is used wisely. When dry camping, turn the inverters on only when needed. The inverters use battery power to supply 120 Volt AC power to operate most of the appliances, outlets and the entertainment system.

The Automatic Generator Start feature should be enabled to prevent the battery bank from severe discharge. When house battery voltage becomes low, the Auto Gen-Start will engage to supply 120 Volt AC power to the main load center and the inverters. The inverters charge the battery bank. The generator will continue to operate until the pre-programmed stop point. The generator stops and the inverters supply 120 Volt AC power, repeating the cycle.

NOTE:
This is not a replacement for the inverter manual. Keep the inverter manual in the motorhome for reference.

Meters

The two inverters are electrically linked with an external shunt that monitors AC and DC current. A shunt allows a majority of the current to flow through the shunt on heavy conductors, while some of the current flows through on light conductors. The external shunt is what the Master inverter uses to monitor DC charging or discharging current. An internal shunt monitors AC current. When hooked to anything less than 50 Amp service, or particularly when dry camping, use the Master remote to monitor AC and DC current consumption and charging values. The AC and DC meters are located in the Meters Menu. Analog meters are available for quick AC reference when hooked to shore power or operating from the generator. Use the inverter meters to calculate the amount of DC power the inverter requires to operate the refrigerator, cook top and microwave. Write down the figures to approximate discharge time of the battery bank.

NOTE:
When using the inverters as the power source the analog meters do not operate.

Remotes

In the All Electric motorhome each inverter has its own remote control panel. The RC7 GS remote panel is the Master remote. The RC7 panel is the Slave remote. All programming and monitoring values are established through the Master remote. Programming the inverters, or changing program values, has a significant effect on the performance of the electrical system. The remotes for the All Electric motorhome use a different programming schedule. These different values are Shunt Selection, Battery Type and Battery Capacity. These are programmed at the factory, but should be verified before use.

NOTE:
When programming the inverters make sure the correct shunt option, battery type and battery capacity are programmed. All remote programming information is stored in the inverter. The remote is a display of stored information only.

Accessing the Program Menu:
There are several settings available in the programming menu. Care should be used when selecting or changing a program setting.

- Press the Menu Set-Up (**Up** and **Down** arrows) buttons simultaneously for three seconds. When the control panel beeps, release the buttons immediately.
- The programming menu is successfully entered when Search Sense appears on the screen. Use the Up or Down arrows to scroll the programming menu.
- The Settings button will change the value or option.
- Press the Menu Set-Up buttons to exit the programming mode.

Shunt Selection - When programming the shunt option, the Master inverter remote in the monitor panel will be programmed **"External Shunt: This Inverter."** The Slave inverter adjacent to the monitor panel will be programmed **"External Shunt: Other Inverter."** The Slave remote will then be a used as a display only. All AC and DC voltage and current values are viewed through the Master remote.

External Shunt: This Inverter

External Shunt: Other Inverter

Auto Gen Start - The Auto Gen Start feature can be programmed to start the generator from either a specific voltage or a percentage of SOC (state of charge). The Auto Gen Start feature can be programmed to stop the generator at a point of the charge cycle or a percentage of SOC. If the Auto Gen Start feature is programmed to start or stop the generator from a specific SOC, the voltage setting of Fuel Gauge Cutout will affect at what point the generator starts or stops. For example: If the Fuel Gauge Cut-out voltage is set to 11.8 Volts with the generator set to start at 80% SOC, actual voltage when the generator would start would be approximately 12.5 Volts.

Battery Type - Charge voltage is automatically selected when programming the battery type of the Master remote in the programming menu heading “Battery Type.”

Select **“Battery Type: AGM**” - This setting uses a lower charge voltage than the Liquid Lead Acid setting.

Battery Type AGM

Battery Capacity - The amount of time in the Bulk and Absorb charge cycles are automatically selected when programming the Battery Capacity of the Master remote. In the programming menu under **Battery Capacity**: select **Battery Capacity 1000Ahr.**

Battery Capacity 1000Ahr

While Traveling:

The refrigerator may be operated while the motorhome is traveling. The electrical combination of the engine alternator and the inverter's AC output supplies the power necessary to operate the refrigerator on 120 Volts AC. Disable this feature when the engine is off. House battery power is quickly consumed when using the inverter to operate the refrigerator on AC electric. Hook to shore power, start the generator or enable the Automatic Generator-Start feature. To conserve house battery power, turn the inverter off when not in use.

NOTE:
All-Electric motorhomes include two solar panels which are installed on the roof.

House Batteries

The battery bank consists of five Type 8-D 255 amp hour AGM (Absorb Glass Mat) batteries. The batteries are hooked in parallel. Voltage readings are the only way to accurately determine the state of charge of the sealed AGM batteries. Voltage readings are most accurately measured after three hours of battery inactivity. The length of time it takes to charge the battery bank to a full state of charge will vary with the following conditions:

- How deep were the batteries discharged?
- What other DC loads are applied during the charge cycle?
- What is the actual physical condition of the batteries?
- Inverter remote programming.

State of Charge (%)	O.C.V./Cell	O.C.V./12 Volt Battery
100	2.13	12.8 or greater
80	2.10	12.6
60	2.05	12.3
40	2.00	12.0
20	1.97	11.8
0	1.93	11.6 or less

These voltage levels are approximate and give an indication of the state of charge of a battery at rest. As the battery ages these voltage measurements will be lower.

It may take a number of hours or days, with the motorhome hooked to shore power 24 hours a day, to charge the batteries to a full state of charge. During the charge cycle, one inverter may be in Bulk charge while the other is in Float. This is normal as the two inverters, though electrically linked through a common shunt, do not have a common link between their internal chargers.

Discharge and recharge time of the house batteries will vary depending on the type of load and voltage during the charge or discharge cycle. Discharging the batteries at a slow, steady rate to a specific voltage, then charging the battery bank for the same amount of amp hours removed during the discharge cycle, will not yield a charged battery bank. The AGM battery bank, though very efficient, is not a perfect trade with amp hours discharged and charged. In addition, the type of discharge load depends on the charge time. A rapid and heavy discharge cycle yields less available amp hours than a slower discharge rate. Conversely, a rapid discharge cycle, though equivalent in the same amount of amp hours as a slow discharge cycle, requires a longer charge time. Regardless of the type of discharge cycle, it always requires more amp hours to charge the batteries than what the batteries have discharged.

The life of the battery bank will greatly decrease when the Depth of Discharge (DOD) is below 50%. Charge the batteries whenever they have been discharged. Batteries left in a discharged condition will eventually no longer accept a full charge or may not accept a charge at all. Never store the motorhome with a discharged battery bank. It is better to make several small discharge and full charge cycles than a few deep DOD cycles.

NOTE:
For optimum battery life, the batteries should not be cycled lower than 60% state of charge.

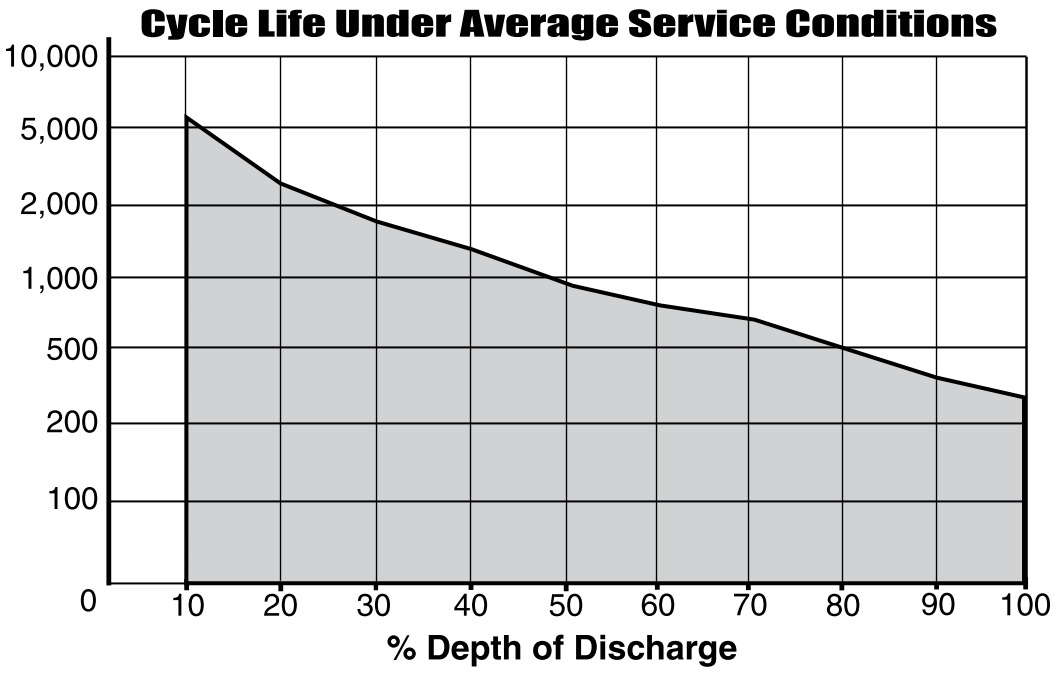

Test Conditions: 1. Discharge Voltage = 1.75 V/Cell. 2. Charge Voltage = 2.4 V/Cell. 3. Duration = 1 Hr. Rate. 4. Temperature = 25° C. 5. End of Life = 80% Capacity.

060235

Located in the battery bay are two main battery disconnect switches for the house batteries. On the back of each disconnect switch is a 500 Amp fuse. These fuses protect against a shorted battery cable or other over current condition. A weatherproof fuse holder, with a 20 Amp ATO fuse for the solar panel, is attached to one of the battery disconnect switches.

CAUTION:
When working on the batteries use protective measures against short circuits. Place insulating material over the batteries when working on or near the battery area. Remove rings and watches. Use extreme caution when working with hand tools. Do not allow the tool to short circuit battery connection. Always mark cable routing and location before servicing, removing or replacing batteries.

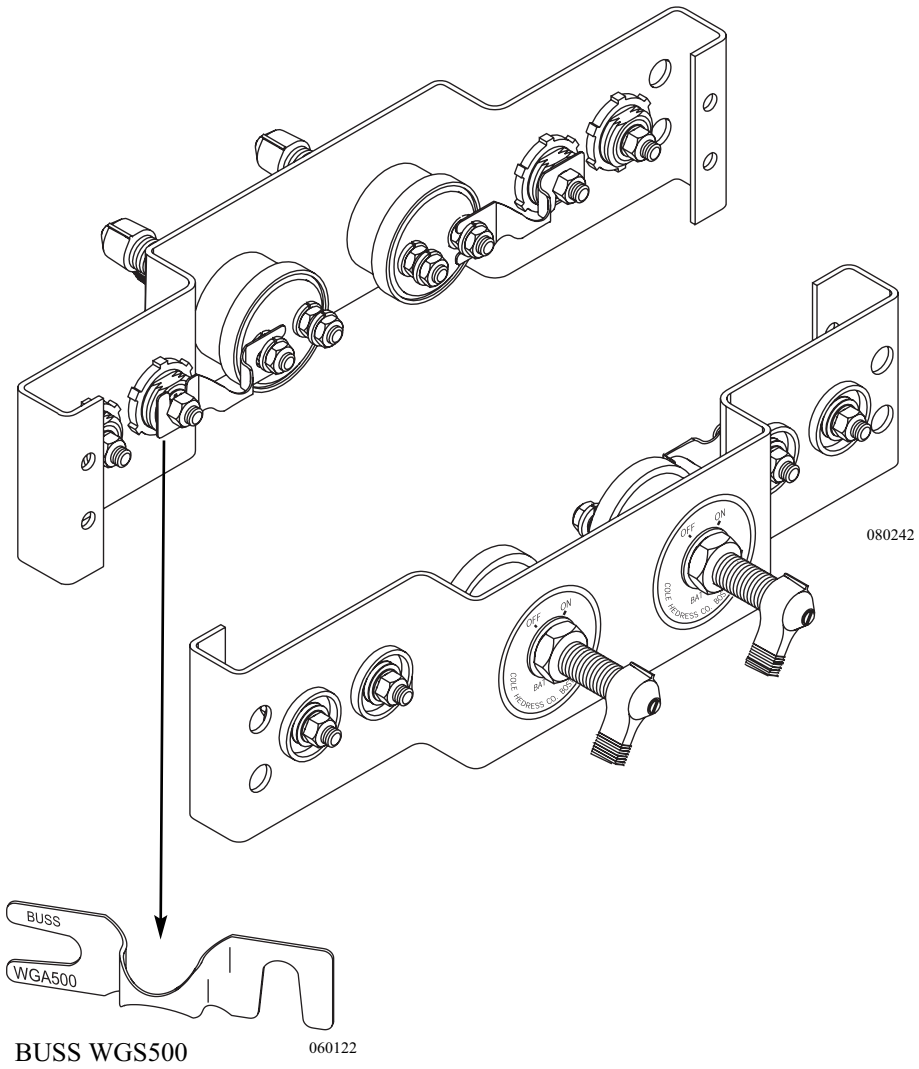

BUSS WGS500

Wiring Systems Interfaced

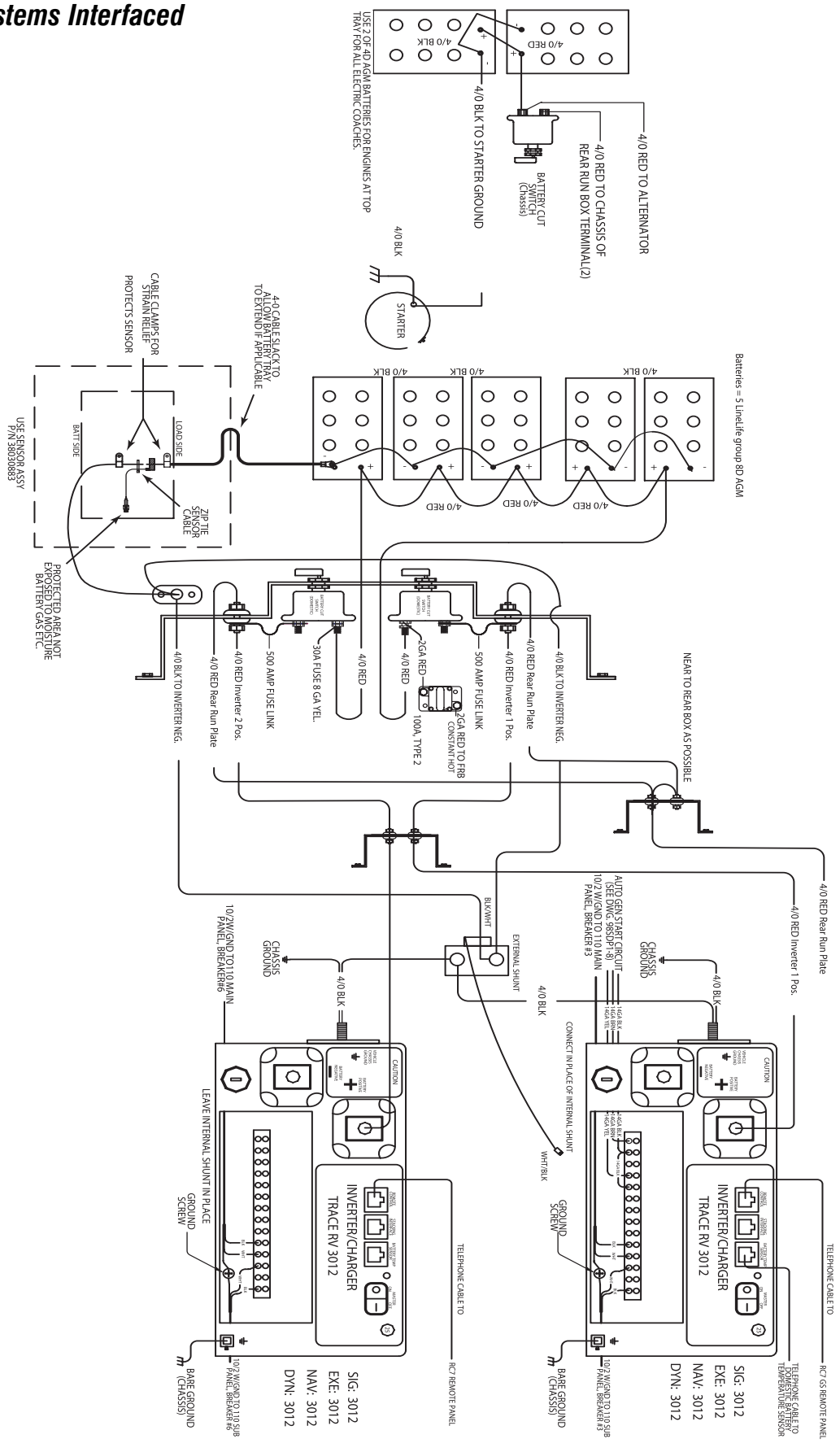

~ NOTES ~

~ NOTES ~

Signature 2005

Electrical Systems - Chassis • Section 9

CHASSIS ELECTRICAL - INTRODUCTION 383
BATTERY DISCONNECT - CHASSIS 383
BATTERY - CHASSIS 384
FUSES & CIRCUITS 385
Rear Start Switches.....386
Isolator Relay 387
Relays 387
ALTERNATOR.....390
Alternator Testing Procedure 391
STEERING COLUMN & SMART WHEEL 392
Smart Wheel Operation.....392
Wiper Function 394
Tilt & Telescope.....395
CONSOLE 396
Transmission Shift Selector 396
Parking Brake 397
Leveling Controls.....397
DASH.....398
Indicator Lamps.....398
Gauges.....399
Switches 402
DASH AIR CONDITIONER & HEATER CONTROLS ...408
About Refrigerant.....410
SYSTEM CONTROL CENTER.....414
DIAGNOSTIC PLUG LOCATION.....415
ALADDIN™ ENGINE DISPLAY.....415
BULB USAGE CHART - EXTERIOR 417
ENGINE “NO START” - FLOW CHART.....418

CHASSIS ELECTRICAL - INTRODUCTION

A majority of the chassis electrical functions are designed to operate from 12 Volt DC (direct current) power. This is why the chassis batteries play such an important role in the function of the motorhome. Therefore, it is important to keep the 12 Volt DC system(s) in good working order. These systems, with their incorporated electronics, are voltage sensitive. If DC voltage is not within specification, some electronic items may be damaged.

The two different systems, engine and house, have separate of battery banks. The engine batteries supply 12 Volt DC power to the front distribution panel located in an outside compartment by the roadside front wheel. This panel contains mostly engine system fuses and wiring such as headlights, taillight, dashboard functions, gauges, etc. The house batteries supply 12 Volt DC power to the distribution panel located in the bedroom. This panel contains fuses for the house, interior lighting and appliances.

BATTERY DISCONNECT - CHASSIS

The main battery disconnect switch, located in the curbside battery compartment, controls the DC power to the front electrical bay, and to most components in the rear run box. Most chassis and engine functions are interrupted when the battery disconnect is turned off. Some electronic components of the engine and transmission require a constant power source, and will continue to draw power when the disconnect is engaged.

Turn the main battery disconnect switch off when the motorhome is going to be stored, or when performing electrical maintenance. If possible, leave the motorhome plugged into an AC source with the battery disconnect switch on to help prevent the possibility of dead batteries.

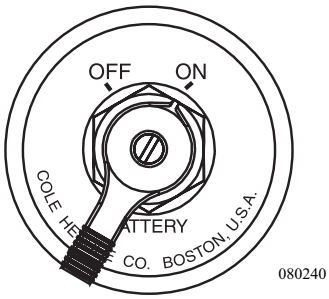

Battery Disconnect: Located in Curbside Battery Compartment.

If an AC source is not available, and the motorhome is going to be stored more than 48 hours, it is recommended to turn the battery disconnect switch off.

WARNING:
When welding is involved for motorhome repair or modification, only qualified, experienced technicians should weld on the chassis. Improper welding procedures and materials may weaken the assembly or result in damage that is not obvious and may not cause an immediate problem or failure. Unauthorized modifications or repairs to the chassis could result in a forfeiture of warranty coverage.

DANGER:
Due to the sensitive nature of the electronics on the chassis, the following precautions are required to protect electrical components in the motorhome chassis:

1. **Disconnect the (+) positive and (-) negative battery connection.**
2. **Cover electronic control components and wiring to protect from hot sparks.**
3. **Disconnect the terminal plugs from the engine Electronic Control Unit, located on the passenger side of the engine block.**
4. **Disconnect all the plugs from the transmission Electronic Control Unit, located in the storage bay between the frame rails.**
5. **Disconnect the wiring from the alternator.**
6. **Do not connect welding cables to electronic control components.**
7. **Attach the welding ground cable no more than two feet from the part to be welded**.

BATTERY - CHASSIS

The chassis battery is a crank type battery designed to produce high amperage necessary to start the engine. Maintain the chassis battery through regular electrolyte level inspections and hydrometer readings. High electrolyte consumption, or inconsistent hydrometer cell readings, may indicate a charging system problem. Perform a charging system and current draw check if the battery is exhibiting abnormal hydrometer readings.

NOTE:
Replacement batteries should have the same cold cranking amp (CCA) rating.

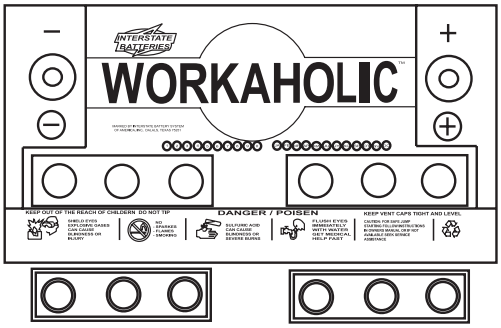

080460

Battery with cover removed. Cut plastic to remove cover.

The motorhome relies on two electrical panels to control chassis system functions and some house operated items. One electrical panel, located roadside ahead of the front wheel, contains fuses, self-resetting circuit breakers and micro-relays. The other electrical panel, located curbside rear compartment, contains high-amperage circuit breakers, a high-amperage solenoid and the rear start box. The circuit cards in both electrical panels use LEDs to indicate power.

- **RED** indicates Fuse.
- **GREEN** indicates Relay.
- **YELLOW** indicates Signal.

The fuses are standard ATC blade type. When a fuse "BLOWS," the wire in middle of the plastic case will be broken. A bad or blown fuse must be replaced with a fuse of the same rating and type. Using a fuse of a different type or rating will defeat the circuit protection provided by the fuse, which could result in damage to the motorhome electrical system.

A fuse that has been replaced, and continues to "BLOW," may indicate a fault exists or an electronic component has failed. It is recommended that the motorhome be taken to a qualified RV technician before any future use to diagnose and repair the potential problem. Circuits are identified with a label adjacent to the fuse.

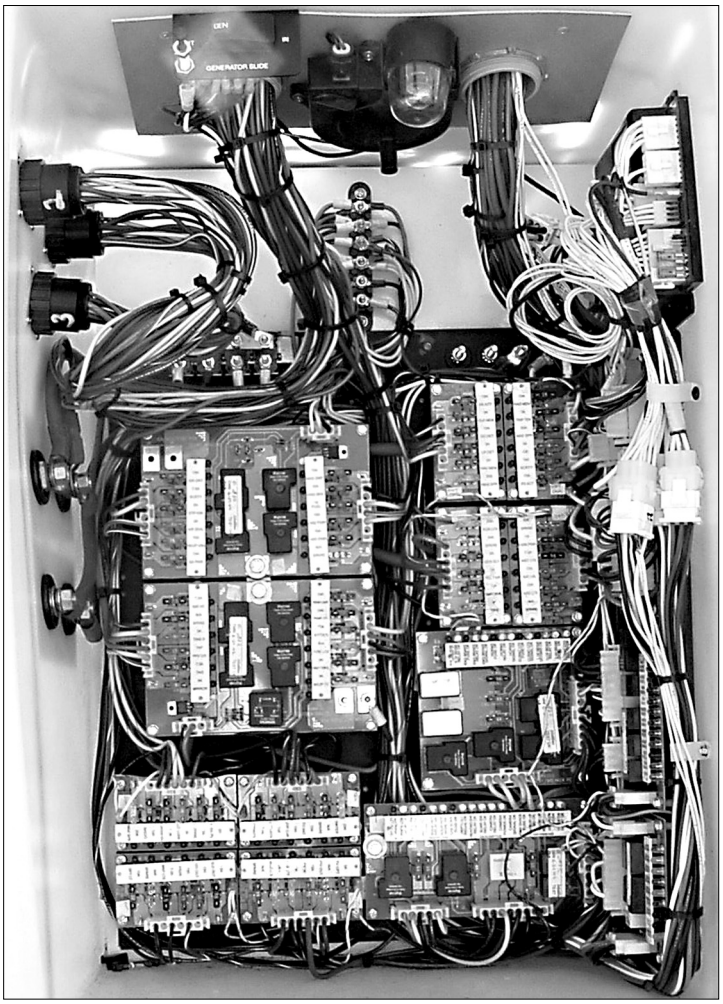

Front Run Box in Roadside front bay. front run box.tif

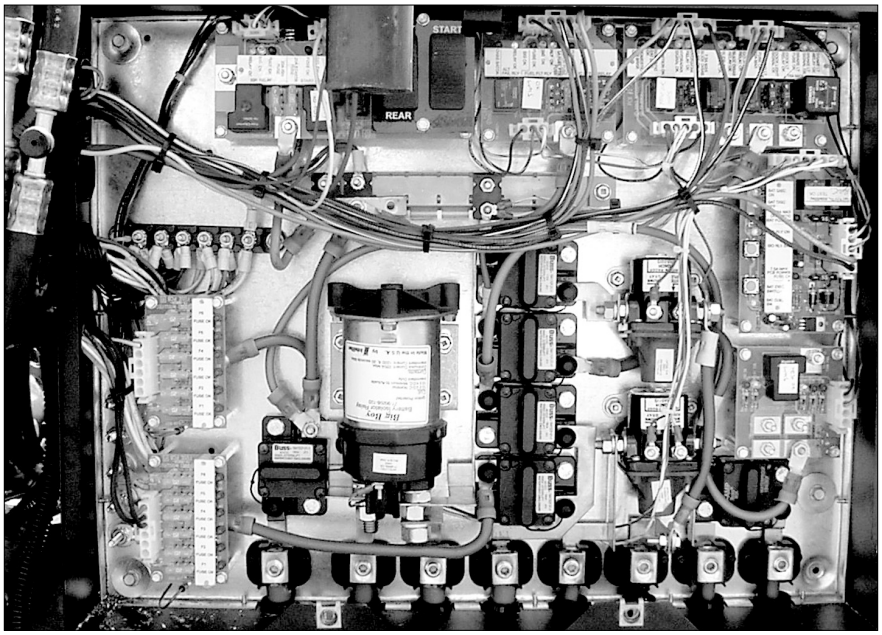

Rear Run Box in engine compartment.

Rear Start Switches

The rear start switches are for safety and convenience. The **FRONT/REAR** switch has three positions:

1. **FRONT -** In this position the motorhome will only start with the ignition key.
2. **REAR -** In this position the motorhome can only be started with the rear start switch. (Note that the ignition switch must also be in the "on" position.)
3. **OFF -** In this position the starter will not engage with either ignition key or rear start switch. It will also turn the engine off if it is already running.

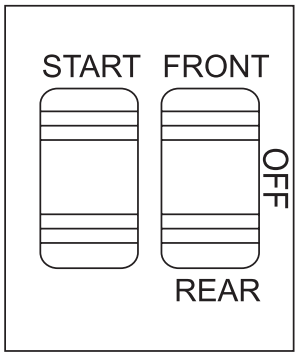

090373h

Rear Start switches located inside the Rear Run Box in the engine compartment.

The **START** switch engages the starter when the **FRONT/REAR** switch is set to **REAR** and the ignition switch is **ON**.

NOTE:
If the motorhome will not start from the front, check the rear start box to see if the switch was bumped or accidentally set to OFF or REAR. If the motorhome still does not start, try to start it from the rear start box.

CAUTION:
When checking or servicing the engine compartment, the Rear Start switch should be placed in the REAR or OFF position to prevent accidental starting of the engine from the cockpit area.

To Start From the Rear:

When starting the motorhome from the rear, confirm all tools and parts are clear of the engine and underneath the motorhome.

- Turn ignition key to the **ON** position.
- Move rocker switch on the rear start box down to **REAR**.
- Ensure everything is clear of rotating parts.
- Hold the momentary switch to **START**. After the engine starts, release the switch.
- Move switch to the center **OFF** position, to turn the engine off.
- Check the rocker switch to confirm it is in the position desired.
- For normal operation, place the switch to **FRONT**.

Isolator Relay

The Isolator Relay provides a simple means of isolating the two battery systems, house and chassis, and connecting the batteries together when the engine is running.

A momentary dash-mounted switch is added to provide a "BOOST" for the engine batteries from the domestic batteries.

When using the battery boost switch, the relay may have to deliver the full starting current to the engine batteries. The relay contacts must close and provide low resistance without the harmful effects of arcing. To be sure relays can perform under harsh conditions, the contacts are protected with a unique antioxidant coating. The relay is of heavy construction and can easily deliver the needed current. In a battery charging situation, both batteries will charge at equal voltage.

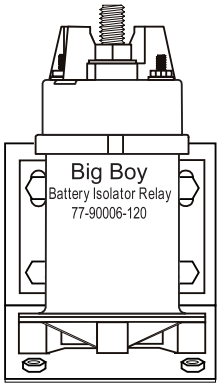

060216B

Isolator Relay: Located in rear run box in engine compartment.

Relays

The motorhome uses various relays to operate electrical equipment such as lights and motors. If a relay needs to be replaced, carefully record the location of each wire and all markings or labels.

Relays can look the same in appearance, but differ in function. Note that on the side of the relay is a schematic drawing identifying if the relay is 87 or 87a relay. These current ratings differ, and if mixed, will create problems. Ensure the replacement relay is of the current rating to assure proper operation.

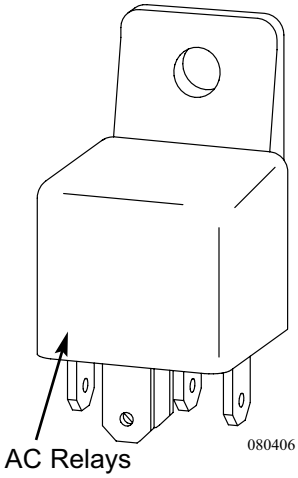

080406

Another indicator to the type of relay is the post or legs. Turn the relay over and look at the post.

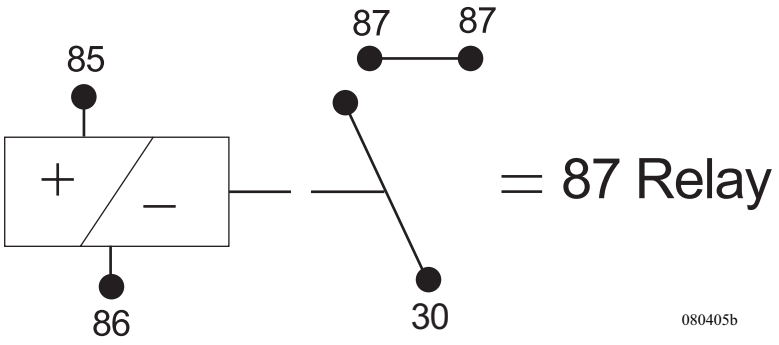

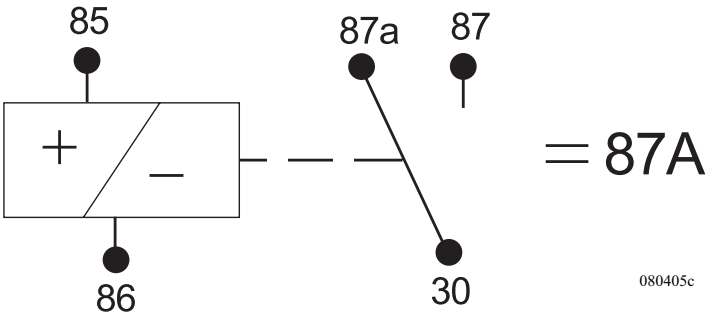

Note the differences between the numbered posts:

1. The 30 post is the incoming fuse and/or breaker power. Some relay applications supply power to the 30 post. Some use it for ground. The 30 post can be used many different ways.
2. The 85 post is one side of the coil, tripped different ways.
3. The 86 post is the opposite side of the coil, tripped different ways.
4. The 87 posts are not common to the 30 post until the relay is tripped. When the relay trips, both 87 posts are common to the 30 post.
5. Using an 87a relay, the 30 post and the 87a post are common. When the coil is tripped, the 87a post becomes inactive and the 30 post becomes common to the 87 post located on the outside of the relay.

A Single Pole Single Throw relay (SPST) is an electro-magnetic switch consisting of a coil (terminals 85 & 86), one common terminal (30), one normally closed terminal (87a), and one normally open terminal (87).

When the coil of the relay is at rest (not energized) the common terminal (30) and the normally closed terminal (87a) have continuity. When the coil is energized, the common terminal (30) and the normally open terminal (87) have continuity.

NOTE:
When there is power applied to the coil, the coil sets up a magnetic field in the windings. When the power is removed, the field collapses. A momentary high voltage discharge will occur. This is how an ignition coil works.

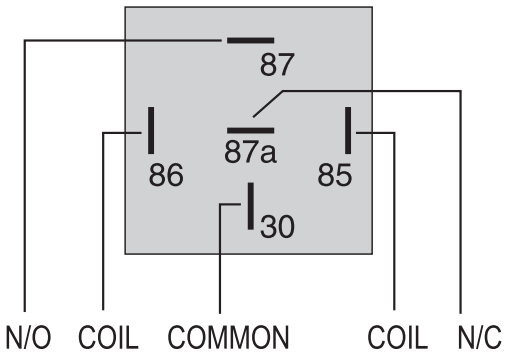

Singe Pole, Single Throw Relay.

EXAMPLE:

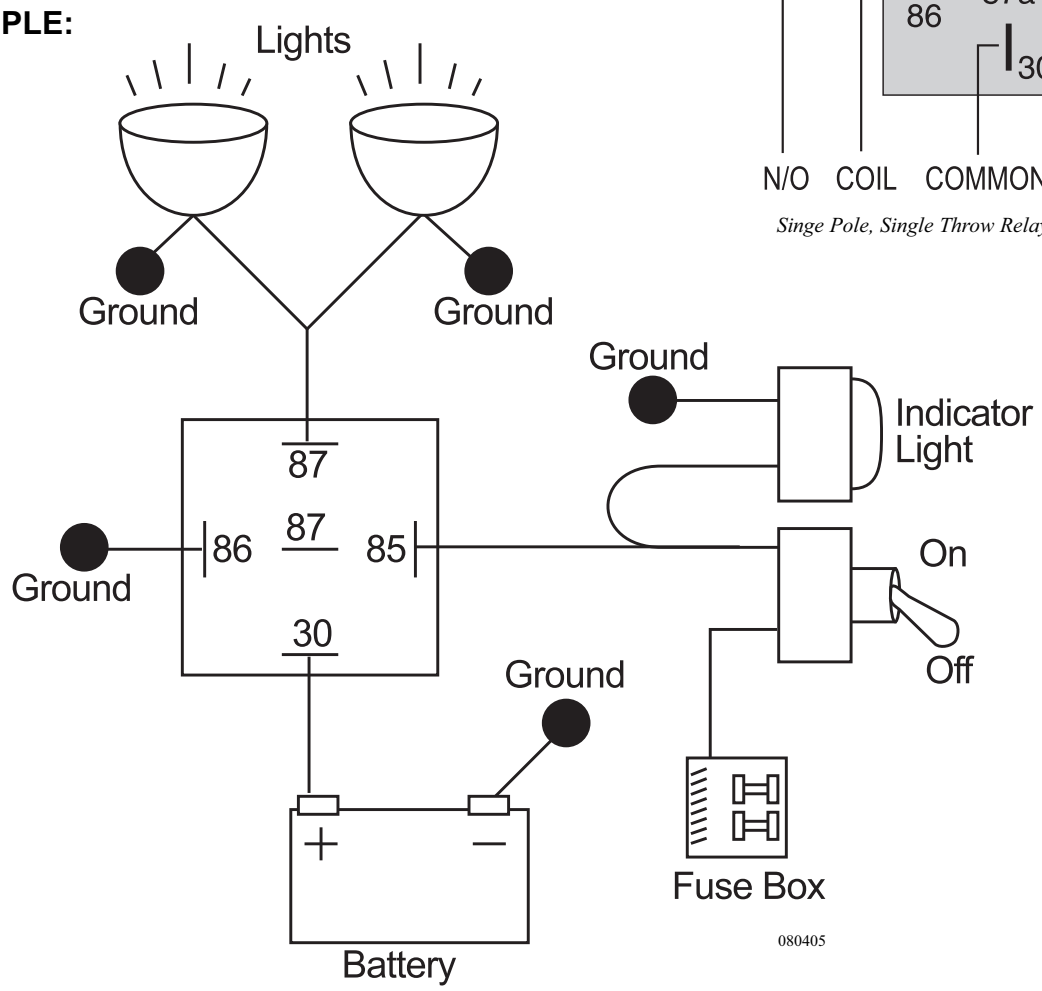

ALTERNATOR

The alternator is designed for output through the engine operating range. When traveling, keep an eye on the voltmeter in the dash area. Normal readings should be between 13 to 14.5 Volts DC. Voltage indications higher or lower indicate a potential problem with the charging system. If the alternator output drops below an acceptable level, a charge indication warning lamp will illuminate.

The alternator replaces amp hours the chassis battery used to start the engine. The amount of charge the alternator sends to the chassis battery is dependent on the amount of time the engine is operated. Repeatedly starting the engine for short periods may not be enough operating time to adequately replace the amp hours the chassis battery uses to start the engine.

The function of the alternator is an electrical system voltage maintainer, not a battery charger. When the engine is operating, the alternator maintains electrical system voltage relative to a load, such as headlights and windshield wipers. When a heavy load is placed on the alternator, such as trying to charge dead house batteries, the operating temperature of the alternator will increase. Excess operating temperature of the alternator for extended periods of operation can lead to premature failure of the alternator.

NOTE:
The alternator is not designed to charge the house batteries from a complete discharge to a full state of charge. The alternator will maintain the battery charge during travel, supplying the DC current necessary to operate running lights or other DC loads.

If the house batteries are in a low state of charge, it is recommended to charge the house batteries with the inverter or an auxiliary battery charger before driving the motorhome.

CAUTION:
Long-term use of the inverter to operate the microwave while in transit will damage the alternator. Use the generator to operate the microwave while in transit.

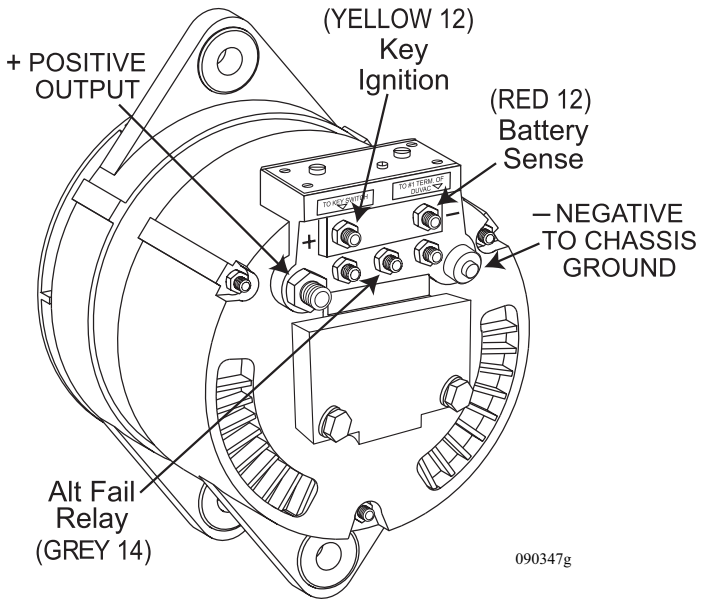

270 Amp Alternator

Alternator Testing:

- Check all wiring for burnt or loose electrical connections. Repair as needed.
- Check all grounds and electrical connections to confirm they are clean and tight.
  a. Alternator ground to chassis frame.
  b. Motor block ground to chassis frame.
  c. Chassis battery ground to chassis frame.
  d. Alternator positive output to isolator center terminal.
- Inspect the alternator for damage. A broken fan blade can damage an alternator or throw it out of balance.
- Check belt, pulley and fan for wear. Replace as needed.
- Do not disconnect the battery, or battery wire, from the alternator with the engine running as this can damage the alternator or regulator.
- The pulley for the alternator should be torqued to 80 foot pounds.
- Chassis battery voltage with the engine OFF should range from 12.2 to 12.7 Volt DC.
- Chassis battery voltage with the engine at idle should range 13.5 to 14.2 Volts DC.
- The output of the alternator range is 13.6 to 15.4 Volts DC. Connect a volt meter to the (B+) terminal of the alternator and chassis ground. Idle the engine up to 1200 RPM.
- Connect a clamp-on amp-meter, if available, to the positive battery cable to verify the battery state/rate of charge.

NOTE:
The alternator is not a battery charger. It is designed to maintain proper electrical system voltage. A battery with a low state of charge, or a dead battery, may overheat and damage the alternator.

STEERING COLUMN & SMART WHEEL

The steering wheel system consists of electronic modules enclosed in the steering wheel and the Master Controller typically located in the front run box. Four wires utilizing a "clock-spring" connector in the steering column accomplish communication between the steering wheel and the Master Controller. The Master Controller decodes the signal for the closed switch and operates the corresponding outputs for that function. Two additional wires provide power and ground for the steering wheel back-lighting.

The 3 Amp fuse on the Master Controller is for backlighting the switch panel. LED draw is approximately 20 mA.

Another function of the smart wheel is the “High Idle” feature.

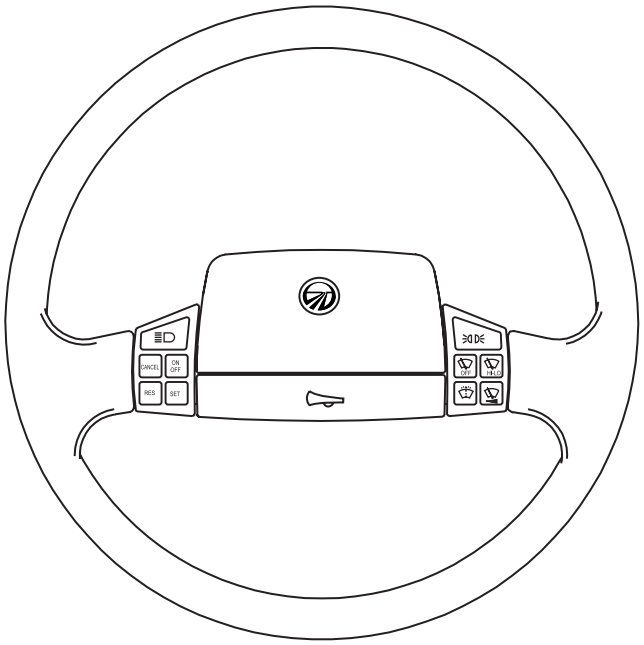

080308

Smart Wheel Operation

HORN:
The horn bar on the steering wheel sends the appropriate signal to the Master Controller causing the HORN output to activate while the switch is pressed.

HEADLAMP FLASH:
When headlights are **ON**, pressing the switch will turn them off as long as the switch is pressed. Similarly, when the headlamps are **OFF**, pressing the switch causes the headlights to illuminate as long as the switch is pressed.

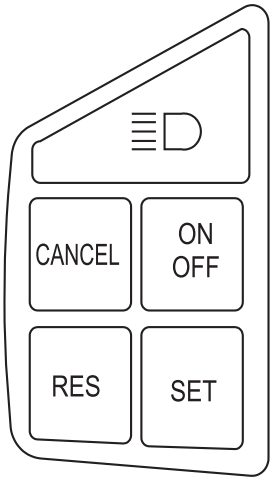

090270

CRUISE FUNCTIONS:

- **CANCEL -** Signals cruise system to disengage without losing the current speed memory setting.
- **ON/OFF -** Cycles cruise system ON and OFF.
- **RES (RESUME) -** Actuates cruise resume function of engine controller.
- **SET -** Actuates cruise set function of the engine controller.

WARNING:

Do not use cruise control in heavy traffic or on roads that are winding, slippery or unpaved. Do not shift the transmission into "N" (Neutral) with the cruise control on. High engine RPM run up will occur until the cruise control is turned off.

To use the Cummins High Idle Feature:

- With the cruise control **OFF**, Press and release the **RES** button. Each time the switch is pressed and released, the idle will rise in RPMs, from 600-800 RPM. To lower the idle, press and release the **SET** button. Engine idle speed will decrease in RPM increments.
- With the Cruise Control **ON**, press and release the **RES** button once. Engine speed will increase to 1000 RPM. Push and hold the **RES** button, engine speed will increase to 1500 RPM. Use **CANCEL** or turn the cruise control **OFF** to return the engine to an idle.
- With the Cruise Control **ON**, press the Set button once. Engine will increase to 1100 RPM. Press and hold the **SET** button, engine speed will decrease to 900 RPM. Use **CANCEL** or turn the cruise control **OFF** to return the engine to idle.

To Use the Detroit High Idle Feature:

- With Cruise Control **ON**, push and release the **RES** button to increase RPM to 800. Repeating this procedure will raise engine speed by 25 RPM until a maximum of 1600 RPM is reached. Push and hold **RES** button to increase RPM. Hold down the **SET** button to decrease RPM. Push the **ON/OFF** button to return the engine to normal idle. The **CANCEL** button has no effect in the High Idle mode.

NOTE:

The transmission will not shift into gear if the engine RPM is at or above 900. The display will flash "6" indicating the engine RPM is excessive. Select "N" and lower the engine RPM.

Wiper Function

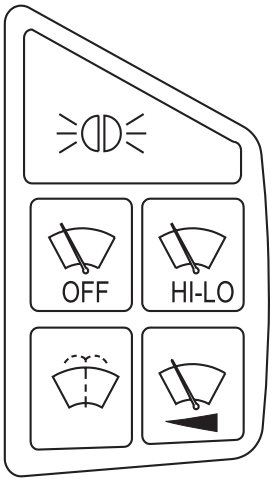

090270

The windshield wipers are driven by a single motor. Any wiper function generates a **Headlamp On** signal from the Master Controller. To disengage automatic headlight illumination, turn **off** the ignition, or activate and then deactivate the dashboard headlamp switch.

Marker Flashlamp:
Pressing Marker Flashlamp causes the taillights and all marker lights to momentarily flash.

OFF:
Cancels all wiper operations. Wiper function is also cancelled when the ignition is turned off.

HI-LO:
When the button is pressed, wipers activate on **low** speed. If the button is pressed again, the **high** wiper speed setting is activated. Subsequently pressing the **HI-LO** button will alternate wiper operation between **low** and **high** speed mode.

Wiper Wash:
Activates the wash pump relay while the button is pressed. If no wiper function has been selected, the **low** wiper will activate for a period of approximately three wiper cycles, after the switch is released. If any wiper functions have been selected, the wipers will continue to run in the selected mode after the wash button is released.

Wiper Variable:
Operation of the **Wiper Variable** button causes the **low** speed wiper function to activate for one wipe. If the button is pressed again within approximately 30 seconds, the **low** speed wiper function activates again and repeats at an interval determined by the time between the last two operations of the button. Additional button operations will shorten the cycle. Activating other wiper modes cancels the variable mode.

An example: In light rain or misting conditions, press the button once to initially clear the windshield. If the windshield requires a second clearing, press the button again, setting the timed interval between subsequent wipes required by the current conditions. To extend the wipe interval, press the intermittent button twice more, or switch the wipers off and use the same method to set the desired interval.

Tilt and telescope steering wheel control lever is located on the steering column.

- To tilt the steering wheel: Pull the lever up and tilt the steering wheel to the desired level. Release the lever to lock the steering wheel in the new position.
- To telescope the steering wheel: Push and hold the lever down. Move the steering wheel to the desired location. Release the lever to lock the steering wheel in the new position.

Turn indicator and headlight high/low dimmer control is located on the steering column.

- Push the lever forward to activate right turn indicator circuits when the ignition is on.
- Pull the lever back to activate left turn indicator circuits when the ignition is on.
- Pull the lever up to select high/low beam circuits when the headlights are on.

Hazard Flashers:
- The flasher button is located on the steering column.
- To turn on the four way flashers, pull **out** on the flasher button. The turn signal alarm will sound.
- To turn off the flashers, push the button **in**.

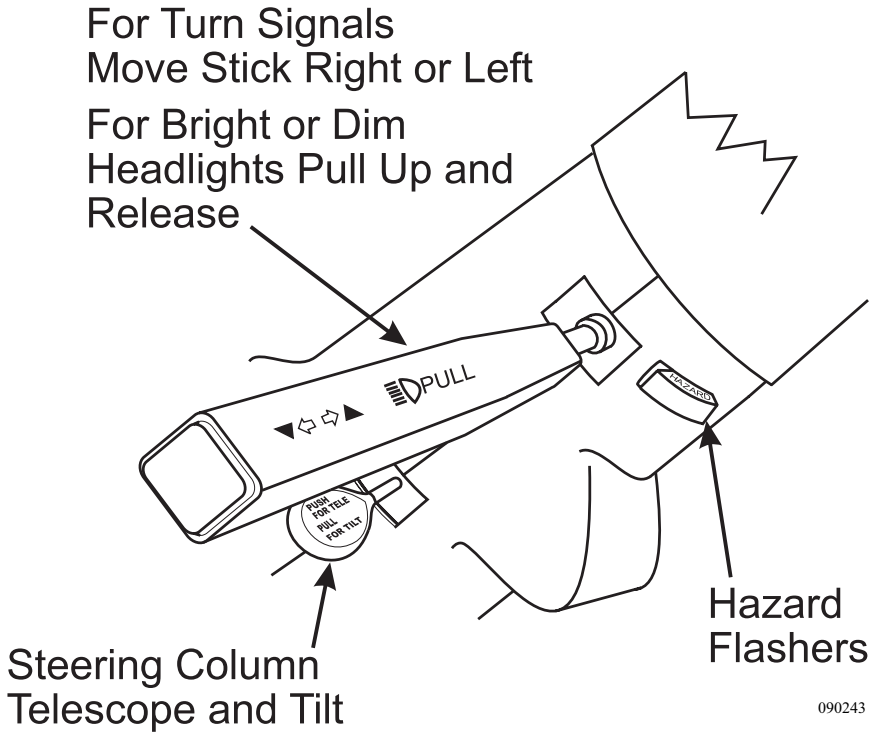

Transmission Key Pad:

The function of each position of the keypad push-button shifter is as follows:

- Selects **NEUTRAL** by pressing **N**. The area around the **N** button has a raised ridge so the driver can orient his hand to the Neutral button by touch.
- Selects **REVERSE** gear by pressing **R**.
- Selects the forward **DRIVE** range by pressing **D**. The highest forward gear (**6**) appears on the display and the transmission will shift to the first gear. Gear "**6**" will remain on the display through subsequent upshifts or downshifts.
- The **UPSHIFT** and **DOWNSHIFT arrow** buttons are used to select a higher (if not in sixth gear) or lower (if not in first gear) forward range. These buttons are not functional in **NEUTRAL** or **REVERSE**. One press changes the gear selected by one range. If the up or down button is held continuously, the range will continue to change up or down until the button is released or until the highest/lowest possible gear is selected.
- The **Mode** button enables Economy Mode.

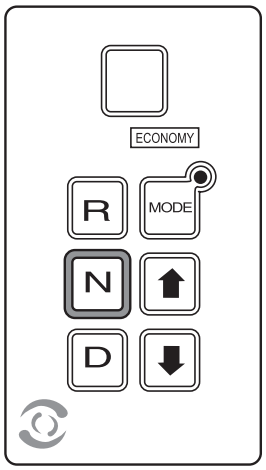

080355c

- To Enter Economy Mode: Press the **MODE** button. The LED will illuminate.
- To Exit Economy Mode: Press the **MODE** button. The LED will extinguish.

Economy Mode:

Economy mode affects the upshift schedule 3-4, 4-5, 5-6 and downshift schedule 6-5, 5-4, 4-3. During highway driving, with the cruise control set between 55 and 65 miles per hour, setting the transmission to economy mode will eliminate about 99% of transmission downshifts from sixth to fifth when incurring a slight incline or overpass.

In city driving, with the transmission set to economy mode, the transmission will upshift approximately 200 RPM sooner using less fuel with reduced engine noise. Do Not use economy mode while traveling in mountain terrain. The lower RPM shift schedule will reduce the flow of antifreeze, lubricating oil and air flow through the radiator, resulting in increased transmission and engine temperature.

CAUTION:
Do not use the economy mode in heavy stop and go traffic or mountainous terrains. Frequent shifting occurs when in economy mode while using heavy throttle, increasing transmission fluid temperature. Exit economy mode until road conditions improve.

NOTE:
When the Auxiliary Braking device is used, the display will change to a default reading of 2 or 3. This setting is pre-selected at the factory and can only be altered by an authorized Allison Service center. The transmission is not actually in second or third gear. This is only a reference point so the transmission will optimize engine braking efficiency.

Parking Brake

The parking brake system is activated when the push-pull control knob (located on the driver's left console panel) is pulled. When the knob is pushed, the brake is released. Prior to driving, allow time for the air compressor to build up sufficient air to shut off the air warning lamp.

park brake.eps

WARNING:
There is a possibility the parking brake can be accidentally released if the air system is charged. It is advised to fabricate a device to be placed under the parking brake handle preventing small children and pets from releasing the brake when parked. A wooden clothespin clasped to the shaft will be suitable.

Leveling Controls

HWH Control (Air Systems):

The touch panel, computer controlled, four-point air leveling system controls computerized air-leveling operations. The ignition must be ON in order for the leveling system to function.

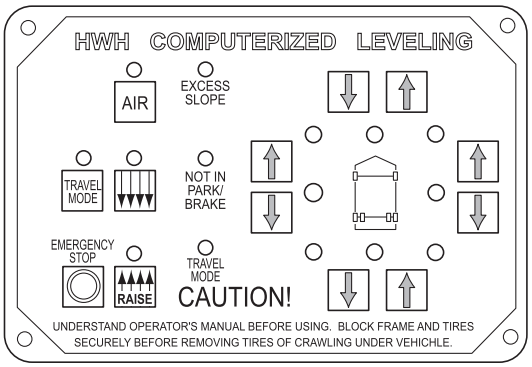

080262e

NOTE:
Air suspension will NOT operate unless ignition is ON.

RVA Control - Hydraulic Systems: (Optional)

The three-point hydraulic leveling system is operated from the control module to manually or automatically level the motorhome. The control features a multiple warning system with flashing lights and a "bong" alarm to alert of a jack down.

NOTE:
Hydraulic leveling works only with ignition in ACC position.

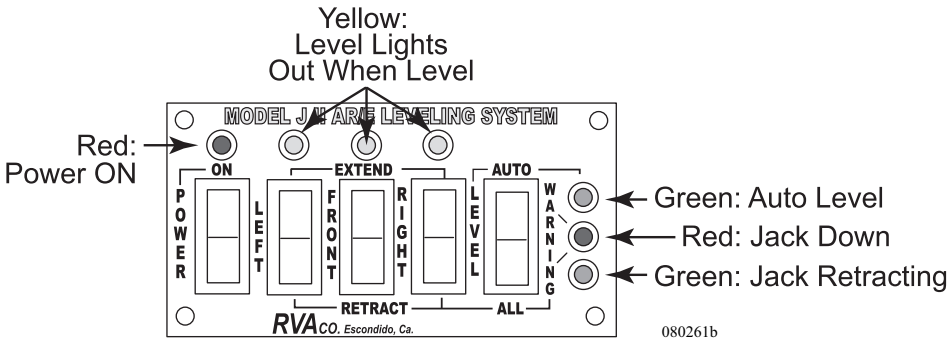

080261b

DASH
Indicator Lamps

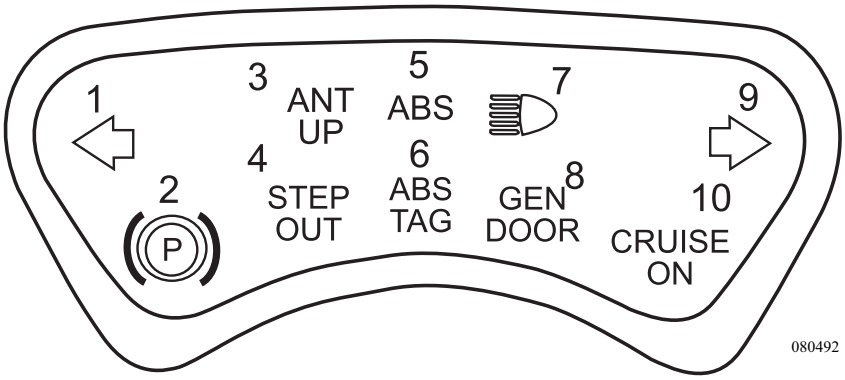

1. LEFT ARROW (Audible Turn Indicators):
Left turn indicator circuits active. Alarm cancels when service brake is applied.

2. PARK BRAKE:
Parking/emergency brake is applied.

3. ANTENNA UP:
Antenna is up, lower antenna before moving motorhome.

4. STEP OUT:
Entry step is in the extended position. Alerts driver to possible problem with entry step.

5. ABS:
Possible fault in the ABS brake system. Fault codes are provided for service technicians.

6. ABS TAG:
Possible fault in the tag axle ABS brake system. Fault codes are provided for service technicians.

7. HEADLIGHT BEAM:
High beams on when illuminated.

8. GEN DOOR:
The generator door is open.

9. RIGHT ARROW (Audible Turn Indicators):
Right turn indicator circuits active. Alarm cancels when service brake is applied.

10. CRUISE ON: Cruise control is activated.

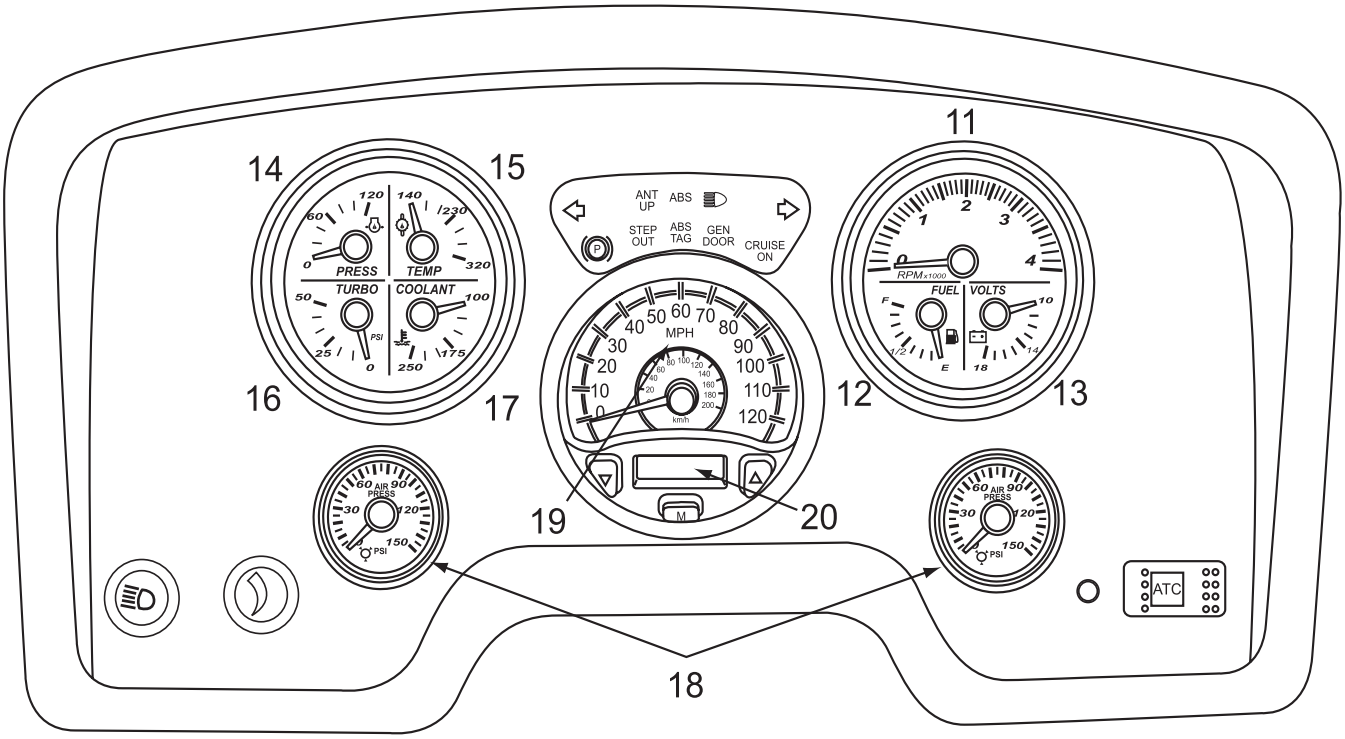

3-IN-1 GAUGE:

11. TACHOMETER (0-4K RPM):

Displays engine speed in revolutions per minute (RPM).

12. FUEL GAUGE:

Fuel gauge will register approximate fuel level in tank, when ignition switch is in run position.

NOTE:

Fuel mileage varies with driving style and road conditions. Always average more than one tank of fuel to obtain a more accurate figure. The diesel generator and the Aqua-Hot system both use fuel from main tank and will affect fuel mileage figures. Diesel generator and Aqua-Hot will not operate below ¼ tank to ensure there is enough fuel to run main engine.

13. VOLTMETER (10-18 V):

Shows the charge condition in the chassis battery. The normal voltage with the ignition switch ON and the engine OFF varies between 12 and 13 Volts. With the engine operating without a heavy load, the battery charging voltage is about 14 Volts. Battery readings of less than 10.5 Volts, or more than 15 Volts usually indicates a battery or electrical system problem.

4-IN-1 GAUGE:

14. ENGINE OIL PRESSURE (0 - 120 PSI):

Indicates oil pressure, not the amount of oil in the engine. Please refer to manufacturer's instructions for specific pressure recommendations.

15. TRANSMISSION OIL TEMP (140 - 320 F):

Shows temperature of transmission fluid. Normal transmission operating temperature is between 160º and 250º F. The maximum transmission to cooler oil temperature is 300º F. Do not let the transmission temperature exceed 275º F. If excessive temperature is indicated, stop motorhome and shift to neutral. Accelerate engine to 1200-1500 RPM and allow temperature to return to normal.

16. BOOST PRESSURE (0 - 50 PSI):

Indicates boost pressure produced by the engine turbocharger.

17. ENGINE COOLANT TEMPERATURE (100 - 250 F):

Under average conditions the gauge will read between 180º and 205º F. Monitor this gauge frequently when CLIMBING HILLS, TOWING OR IN HIGH AMBIENT TEMPERATURES. If the gauge shows that an over heating condition exists (the needle moving above the 212º F area) IMMEDIATE ACTION should be taken to avoid engine damage.

18. AIR PRESSURE GAUGES, FRONT AND REAR TANKS (0-150 PSI):

One gauge indicates pressure in the front air tank. The second gauge indicates pressure in the rear air tank. The normal air system operating pressures are 105 to 130 psi. These air pressures are preset at the factory. If a problem occurs with either air system not maintaining normal operating pressure, it is an indication of a malfunction in the air system. Use caution and stop the motorhome in a safe area. Have the air system repaired before continued travel.

NOTE:

It is not safe to drive the motorhome with low air pressure. Damage can occur to the suspension and driveline, also affecting operation of the air brake system.

19. SPEEDOMETER:

Indicates the speed of the motorhome. The gauge indicates MPH and KPH. Located on the right side of the instrument cluster.

20. LCD DISPLAY AND FUNCTION BUTTONS:

The LCD screen displays information received from the engine, transmission and Anti-lock Brake System (ABS) Electronic Control Units (ECU). The function buttons (▼▲ and **M**) allow access to different displays and setting changes.

LCD displays the following when active:

- ABS Warning
- Check Transmission
- Check Engine
- Engine Hot
- Low Oil Pressure
- Low Coolant Level
- Low Battery
- High Battery
- Low Fuel
- Maintenance Warning
- ABS Tag Error
- Low Pressure
- Water in Fuel
- Odometer
- Trip Odometer 1
- Trip Odometer 2
- Engine Hours
- Clock

Operation of LCD Display:

The system is turned on and off using the ignition. Turn the instrument lighting on and off with headlight switch.

To Change Lighting Intensity:

1. Turn on the headlight switch.
2. Press ▲ to increase instrument lighting intensity.
3. Press ▼ to decrease instrument lighting intensity.

Audible Alarm:

The audible alarm is used to alert the driver of a warning condition while traveling. The warning will then be displayed on the LCD.

To Disable Audible Alarm in Normal Mode:
Press and hold both the ▼ and ▲ buttons until the beep stops.

To Change LCD Display:

Press **M** to scroll through display screens:

- Odometer
- Trip odometer 1
- Trip odometer 2
- Engine Hour
- Clock

Data will display, automatically, two seconds after selecting the desired screen.

Trip Odometers:
To Reset Trip Odometer 1:
1. When **TRIP 1** is displayed on LCD, wait two seconds for LCD screen to show trip mileage.
2. Press and hold **M** to re-set to zero.

To Reset Trip Odometer 2:
1. When **TRIP 2** is displayed on LCD, wait two seconds for LCD screen to show trip mileage.
2. Press and hold **M** to re-set to zero.

To Set Cock:
1. When **CLOCK** is displayed on LCD, wait two seconds for time to be displayed.
2. Press and hold **M** until clock flashes.
3. Press ▲ to change minutes. Press ▼ to change hours.
4. After clock is set press and hold **M** until clock stops flashing.

NOTE:
Time is displayed as a 24 hour clock.

Switches

Drivers Console:

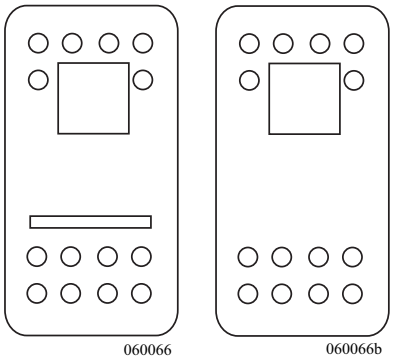

Typical Switch Lighted
Typical Switch Non-Lighted

AIR DUMP (Optional):
Deflates air suspension with optional hydraulic leveling.

CAMERA AIR:
Press and release switch to clean back up camera lens with air. The ignition needs to be in the On or ACC position.

STEP COVER:
The sliding step-well cover is extended and retracted at two switch locations. The second switch is located on the passenger console. Power comes from the house batteries and requires the battery cut-off switch to be on.

CEILING LIGHTS:
Turns on forward halogen lights over front seats.

DRVR SHADE:
Operates the power sun visor on the driver side.

PASS SHADE:
Operates the power sun visor on the passenger side.

MIRR HEAT:
Turns on the heaters in outside rear view mirrors. The mirror heaters should be used when defogging or deicing is needed. Mirror heat should not be left in the ON position unless continuous fogging conditions occur.

SELECT MIRRORS:
Three-way switch that controls the positions on the mirror.
T (Up): Controls the top mirror.
M (Middle): Controls the center mirror.
B (Down): Controls the lower mirror.

MIRROR ADJUST:
After accepting delivery of the new motorhome it will be necessary to sit in the driver's seat and have the mirrors adjusted for accurate visibility. Use an Allen wrench to adjust mirror arm angle for best visibility. Make sure you can see out of both the driver and the passenger side mirrors before departure. Place the Selector switch to the desired side. Use the outside directional ring to set desired angle. Place the switch in the center position to prevent accidental maladjustment.

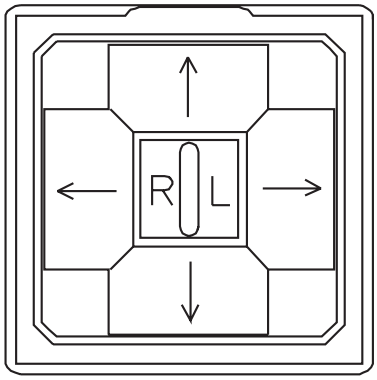

080378

<u>NOTE:</u>
Ignition must be in the ON or ACC position.

ENGINE BRAKE:
Activates the control solenoid for the engine brake system.

BRAKE HI/LO:
HI = All six cylinders.
LO = Three cylinders.

ALADDIN JOYSTICK:
Used to control Aladdin commands.

FANS HI/LO:
Operates a two-speed overhead fan for use with windshield defrosting, cooling and recirculation.

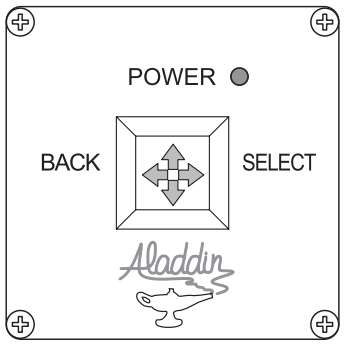

Aladdin Joystick
080378

TAG AXLE:
Switch raises and lowers tag axle. In certain situations tag axle may require to be in UP position. Raise the tag axle when making sharp turns under 5 mph.

Tag Axle Switch Positions:
• Tag axle is down - bar light is not illuminated.
• Tag axle is up - bar light illuminates.

NOTE:
DO NOT drive the motorhome over five MPH with the tag axle raised. The manufacturer will not be held responsible for any damage that may occur from driving with the tag axle raised.

PEDAL IN/OUT:
After sitting in the driver's seat and making adjustments to the mirrors and steering wheel, use the Pedal In/Out switch to adjust the brake and throttle pedal to be either closer or farther away. Locate the switch on the left hand console panel marked Pedal IN/OUT. The switch moves the pedals inward or outward approximately three inches. If you need to move the pedals inward, just push the same switch in the opposite direction. When the pedals reach the end of their traveling distance the motor will stop. Release the switch.

BLOCK HEAT:
This feature warms the engine for starting in sub-freezing or extreme cold temperature. Turning the switch on supplies 120 Volt AC power to the receptacle for the block heater cord. For efficiency, hook the motorhome to shore power when using the block heater receptacle.

To Use the Block Heater:
• Hook to shore power and plug in block heater cord to the receptacle.
• Turn on the Block Heat switch.

NOTE:
It is advised to prepare the engine for starting in sub-freezing temperatures by leaving the block heater plugged in overnight.

AQUA HOT ENGINE PREHEAT:
The engine preheat loop is an integral part of the Aqua-Hot heating system. In cold ambient temperatures, use this feature to preheat the engine. The Aqua-Hot also supplies supplemental heating to the interior using heat created by the engine. While traveling, the water pump on the engine coolant will pass through the Aqua-Hot. When using the supplemental heating feature, use the Comfort Control thermostat to activate the desired heat exchangers.

To Enable Engine Preheat:
- Turn the Aqua-Hot switch on at kitchen.
- Turn the Aqua Hot Engine Pre-Heat switch ON to activate the engine preheat circulation pump. Circulating engine coolant through the engine pre-heat loop will adequately warm the engine to operate for easy starting.
- Allow approximately one to two hours (longer for colder, ambient temperatures) of engine preheating run time. The pump can be operated overnight if desired.
- Turn the engine heat switch OFF when engine preheating is not desired.

NOTE:
Layouts may vary with difference in models and options.

BATT BOOST:
The Battery Boost switch is used in the event the motorhome chassis battery has been drained or is at a low charge level where the engine will not start. This switch momentarily "jumps" the house batteries to the chassis batteries to assist in starting the engine.

To Use the Switch:
1. Hold the switch down for ten seconds. With the switch held down, turn on the ignition key. The battery volt gauge on the dash should indicate 12 Volts.
2. If voltage is sufficient continue to hold the switch down and try to start the engine. If the engine does not start, or voltage is not sufficient, the motorhome may require jump starting. See **Section 2 Driving & Safety - *Dead Chassis Battery***.

NOTE:
There should be an audible click from the engine compartment when the solenoid engages.

CAUTION:
The boost switch should not be held for more than 30 seconds. Damage to the boost solenoid may occur from overheating.

When pressed, the battery boost switch will ground the 12 gauge orange wire from the 1000 Amp solenoid. A loud clicking noise should be heard when the solenoid engages. If the boost solenoid is inactive, locate the molex plug and start the troubleshooting process by removing the cover on the dash. It may be necessary to remove the wire from the battery boost solenoid and perform a continuity check from the front to the rear of the motorhome.

Dash:

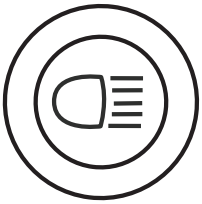

080416

HEADLIGHTS:
Pull to first click to activate parking lights. Pull to second click to activate headlights.

DIMMER/RHEOSTAT:
Controls dash switch backlighting when headlight switch is on.

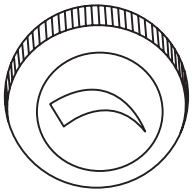

060209

ATC:
Activating the ATC switch allows greater engine torque during an ATC event.

Center Console:

FOG LTS:
Operates the fog lights with the ignition key on and the headlights in the low beam position. The fog lights will go off when the headlights are switched to high beam.

STEP:
Turns power on or off to step. To leave the step extended when parked, open the door. After the step extends, turn the switch off.

DOCK LTS:
The dock lights switch, will operate all dock lights, including the back-up lights. The dock lights switch in the bedroom operates all docking lights.

PORCH LIGHT:
Turns porch light on and off.

GEN ON/OFF:
Starts and stops generator from the dash area.

BAY LIGHTS:
Turns bay lights on and off.

Passenger Console:

BATTERY CUTOFF:
Turns house battery power on to 12 Volt domestic fuse panels.

CEILING LIGHTS:
Turns on forward halogen lights over front seats.

STEP COVER:
The sliding step-well Cover is extended and retracted at two switch locations. The second switch is located on the driver console. Power comes from the house batteries and requires the battery cut-off switch to be on.

STEPWELL LIGHTS:
Turns step-well lights on and off

PASS SHADE:
Operates the Passenger Side power sun visor.

GRAB HNDL:
Turns grab handle light on and off.

Other:

ALADDIN:
Master reset and storage switch for the Aladdin System is located in the roadside overhead compartment.

NOTE:
Layouts will vary with difference in models and options.

DASH AIR CONDITIONER & HEATER CONTROLS

The system is designed to only provide heating, cooling and defrost for the pilot and co-pilot area. The system is not capable of heating or cooling the entire motorhome.

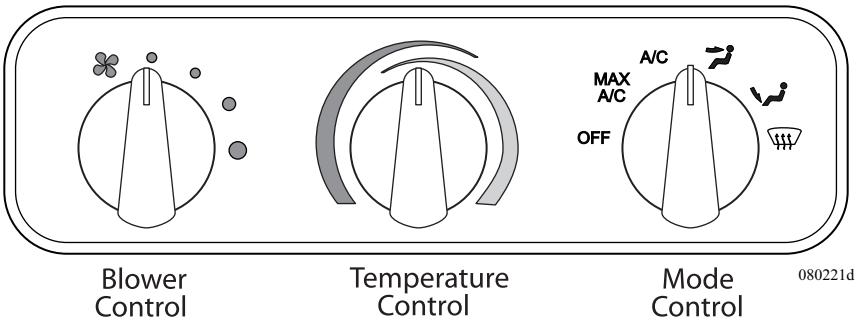

Blower Control Switch:

This switch controls the four speeds of the blower motor. This is one of the best and most effective ways of controlling temperature. The blower will not activate until the Mode Control Switch is set to any position other than Off.

Temperature Control Switch:

Setting the switch to the **Red** zone controls an electric water valve regulating the amount of engine coolant passing through the heating coils in the system. Rotating to the **Blue** zone sets the cut-in/cut-out temperature of the air conditioning compressor on the engine.

Mode Control Switch:

This switch directs air flow by opening or closing damper doors. Use the Mode Control Switch to direct airflow where it is needed to maximize comfort in the cockpit area.

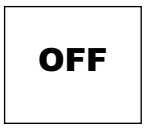

OFF - The blower motor does not operate. The fresh air inlet door will close, minimizing outside air infiltration into the motorhome.

MAX A/C - Recirculated air is drawn from the passenger area and discharged through the dash louvers.

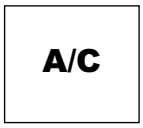

A/C - Fresh Air is drawn from outside into the system and discharged through the dash louvers.

VENT - Fresh air is drawn in and discharged throughout the dash.

FLOOR - Fresh air is drawn in and discharged through the floor louvers.

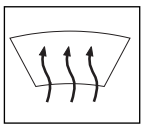

DEFROST - Fresh air is drawn in and discharged through the defrost louvers. The A/C system operates to dehumidify the discharged air.

Operating Hints and Tips:

- Air intake and discharge temperatures are greatly affected by ambient temperature and relative humidity.
- A large amount of cooling capacity is used to dehumidify air as well as cool it. After three to five minutes of A/C compressor operation, discharged air temperature should be approximately 30º F cooler than the fresh or recirculated air entering the A/C system.
- At the beginning of the day, activate the compressor with the engine at idle. This will avoid sudden high speed activation resulting in damage from lack of internal compressor lubrication.
- The dash A/C and heater system should be used monthly to keep the compressor lubricated.
- Warm air will discharge from the dash louvers when the Aqua-Hot is on and the forward comfort control is set to the **FURNACE** position. Set the fan control switch between **LOW** and **HI**.

Winter Use:

- De-ice the windshield using the **OFF** (Defrost) mode.
- Higher temperature discharge air will occur with the blower set to a lower speed setting until the engine has reached normal operating temperature.

Summer Use:

- Close all windows and vents to hot, humid outside air.
- **MAX** AC and **HI** blower will provide a quick cool down.
- Using a lower blower speed will produce cooler discharge air.

Heater:

The heater produces heat to warm the air in the dash area. Much like the refrigeration side of the system, a liquid will be used in the process. This liquid is the engine coolant. The coolant is passed from the radiator to an electronic water valve. The water valve, when open, will allow the coolant to flow through the heater core. The heater core is made up of tubing and fins. Air is drawn into the system by a blower motor through the outside recirculation door opening. Air is blown through the A/C evaporator core and then through the heater core. When the temperature control is in the **WARM** position coolant flows through the heater core. When the temperature is in the **COOL** position coolant flow bypasses the heater core. In either position the air flow is felt at the discharge vents.

Electric Water Valve:

The water valve, which controls the water flow to the heater core, is opened and closed by a stepper motor mounted on the water valve. A control module compares the output voltage from the thermostat to the feedback for the stepper motor of the water valve. The control module then drives the motor to within one-half volt of the control thermostat voltage.

Functional Test:
- Start and operate the engine until the water reaches normal operating temperature.
- Set the HVAC temperature control to the full hot position.
- The discharge air outlets should have hot air.
- Rotate the temperature control to full cold position.
- Allow 10 minutes for the temperature to stabilize.
- The discharge air outlets should have cold air.

No Heat:
- Check the blower and air mode operations. Repair prior to proceeding.
- Verify the engine is reaching normal operating temperature.
- Check the inlet hose at the water valve. Inlet water temperature should be approximately equal to the engine coolant temperature.
- With the temp control on **full hot** position, Confirm that the outlet hose of the water valve is at engine water temperature.

About Refrigerant

Chemical Stability:

The air conditioning system life and efficient operations depends upon the chemical stability of the refrigeration system. The refrigeration system is made of Refrigerant-R134a and Polyakylene Gycol (PAG) synthetic lubricant. It is very important that all materials contained within the refrigerant system be chemically compatible.

NOTE:
An ultraviolet or UV Blue Light is used for leak detection.

The only suitable compound for use with R134a is PAG. The total amount of PAG within the refrigerant system is approximately 18% of the total refrigerant in the system.

How much refrigerant is in the system? How much should be used when charging? You will need 1 oz. of PAG for each 7 feet of hose after the first 15 feet of hose. Roughly, a 40 foot motorhome will use 92 feet of refrigerant hose. Take 15 feet off the measurement and the result is 77 feet. This 77 feet is then divided by 7 for total of 11, and represents the number of ounces of PAG oil needed for the A/C system (11 oz.).

Carrying the formula one step further, the 11 oz. equal approximately 18% of the entire system. The total will equate to approximately 61 oz. or 3.8 lbs. of R134a.

High pressure readings are another way to determine the amount of charge. The ambient temperature reading is measured one inch away from the condenser. The ambient temperature reading, plus 40° F, will equate to a value from the pressure table.

EXAMPLE:
90° F. 1 inch from condenser + 40° F = 130° F ----- 198.90 PSIG -
On fully charged system the expected pressure that should be seen on the HIGH-SIDE gauge will be around 200 PSIG.

NOTE:
All systems are charged at the factory with 4.0 lbs of R134a. A fluorescent dye has been added for leak detection.

TEMPERATURE	PSI GAUGE	TEMPERATURE	PSI GAUGE	TEMPERATURE	PSI GAUGE
16° F	15.69	60° F	57.47	112° F	151.30
18° F	17.04	65° F	64.10	114° F	156.10
20° F	18.43	70° F	71.19	116° F	161.10
22° F	19.73	75° F	78.75	118° F	166.10
24° F	21.35	80° F	86.80	120° F	171.30
26° F	22.88	85° F	95.40	122° F	176.60
28° F	24.47	90° F	104.40	124° F	182.00
30° F	26.10	91° F	106.30	126° F	187.50
32° F	27.79	92° F	108.20	128° F	193.10
34° F	29.52	93° F	110.20	130° F	198.90
36° F	31.32	94° F	112.10	135° F	213.70
38° F	33.17	95° F	114.10	140° F	229.40
40° F	35.07	100° F	124.30	145° F	245.80
42° F	37.03	102° F	128.50	150° F	263.00
44° F	39.05	104° F	132.90	155° F	281.00
45° F	40.09	106° F	137.30	160° F	300.10
50° F	45.48	108° F	141.90	165° F	320.00
55° F	51.27	110° F	146.50	170° F	340.80

psi gauge_temp.eps

R-134a Refrigerant:
R134a is classified non-explosive, non-flammable and non-corrosive. R134a is ozone friendly; however, it is not technician friendly. Proper care in handling must be observed. Under normal atmospheric pressures and temperatures R134a will evaporate so quickly it will freeze anything it comes in contact with. The open container boiling point for R134a is minus 21.7º F. This low boiling point makes for an ideal refrigerant. The tremendous amount of heat transfer which occurs when a liquid boils, or vapors condense, forms the basic principle of all A/C systems. The amount of heat required to raise or lower the temperature of one pound of water by 1º F equals one British Thermal Unit (BTU). The BTU is the standard measurement of an air conditioner system.

Safety and Handling of 134a and Pag Oil:
- Wear eye and hand protection.
- Pag Oil irritates the skin. Flush with water immediately if in contact with any body part.
- Ensure all service work on the A/C system is performed in a well ventilated work area.
- Keep open flame away from service area. The discharge of a refrigerant near an open flame can produce a poisonous gas.

NOTE:
O-rings required for the 134a system are Hydrogenated Nitrile Butadiene Rubber (HNBR), and are green in color.

Air Conditioner Refrigeration Components:

Compressor - The compressor is belt driven from the engine through the compressor and electronic clutch pulley. The compressor will pump freon from a low pressure gas into a high pressure, high temperature gas. This is the start of the refrigeration process.

Condenser - The condenser, located between the frame rails behind the front axle, is made of coils and fins which provide rapid transfer of heat from the refrigerant as external air passes over the coils. The high pressure gas is changed to a high pressure liquid.

Condenser Fan - A steady flow of cooling air is maintained across the condenser during system operations.

Receiver-Drier - Freon leaves the condenser, enters the receiver-drier and is stored until needed. The drier filters out moisture in the system. It only takes one drop of moisture to cause a malfunction in the cooling unit.

Expansion Valve - The expansion valve suppresses the refrigerant into the evaporator according to the cooling requirements. The pressure is reduced in the restrictive effort of the expansion valve. A part of the valve is the capillary tube assembly. The capillary tube is the sensing bulb at the outlet of the evaporator.

Evaporator - A tube core and fins are used in the evaporator similar to the condenser. Air is blown through the fins to allow the evaporator to cool and reduce the pressure.

Blower and Motor - Just as the condenser has a fan, the evaporator has a fan called the blower. The blower will draw air from the cab area and force the air over the evaporator coils and fins. This forced air will ensure continuous vaporizing of the R134a.

Relays and Switches - Electronic switches and relays are used in the control and operations of the system.

Troubleshooting - The dash A/C and Heat system uses a combination of compressed air (developed by the chassis system) and electric relays and vacuum switches. Therefore, any repair can be classified in one of four categories:

- **Electrical**
- **Air Conditioner**
- **Heater**
- **Defroster**

The following information is provided to assist in troubleshooting common operational problems which may occur:

No Heating:

1. Blower switch is turned off.
2. Verify proper engine coolant level.
3. Verify that the engine is reaching operating temperature.
4. Verify that engine coolant is reaching the water valve attached to unit.
5. Verify operation of the water valve to permit engine coolant to pass through the valve to the heater core.
6. Check unit fuses.
7. Check power supply to the water valve and grounding.
8. Check wiring.
9. Engine thermostat faulty.

No Cooling:

1. Check that the blower is operating, A/C switch is in **A/C** or **Max** position and Temperature Control is turned to **Max** cooling (blue area).
2. System fuses are not blown.
3. Condenser fan is operating.
4. Check power supply to unit and grounding of system.
5. Check wiring.
6. Coolant valve is leaking.
7. Drive belt is loose or broken.
8. Compressor Clutch is inoperative, will not engage.
9. Expansion Valve is faulty or frozen.
10. Thermostat control is faulty.
11. Mode control switch is faulty.
12. Compressor is faulty.
13. Loss of refrigerant.

Reduced Cooling:

1. Coolant valve not operating correctly.
2. Air passages are obstructed.
3. Loose or worn drive belt.
4. Check blower and select switch.
5. Thermostat control valve is faulty.
6. Expansion valve is faulty.
7. Compressor is faulty.
8. Low refrigerant charge.

Blower Does Not Operate or Runs Slow:

1. Check fuses.
2. Check for loose or corroded connection.
3. Check wiring.
4. Check to ensure ignition switch is **ON**.
5. Check blower and select switch.
6. Motor shaft has seized.
7. Blower wheel is out of alignment.

Damper Door Does Not Operate:

1. Ensure the control module, mounted on the inside of the firewall, is receiving power from the front electrical bay.
2. Check the connector on the back of the mode switch and on the control module.

SYSTEM CONTROL CENTER

Located behind the overhead access panel of a bay compartment is the System Control Center panel, consisting of the following components.

- **Engine Vehicle Interface Relays & Transmission Electronic Control Unit (ECU):** Electronically monitor and control engine and transmission functions and operating conditions.
- **Anti-lock Brake Control Module (ABS):** The ABS control modules monitor road speed of each wheel, braking conditions, and front and drive axle ABS functions. The Tag Axle ABS module is located above the transmission tail shaft housing. The ATC (Automatic Traction Control) system is also part of the ABS system.
- **Hydraulic Level Sensor:** Monitors level conditions of the motorhome and sends that information to the **Hydraulic Leveling Control Module** mounted in the driver's console.
- **Air Leveling Control Module:** The Air Leveling Control Module operates air solenoids that are mounted in manifolds located above each axle to control Raise, Lower and Travel functions.
- **Air Leveling Sensor:** The Air Level Sensor is located on the HWH Air Leveling Control Module.

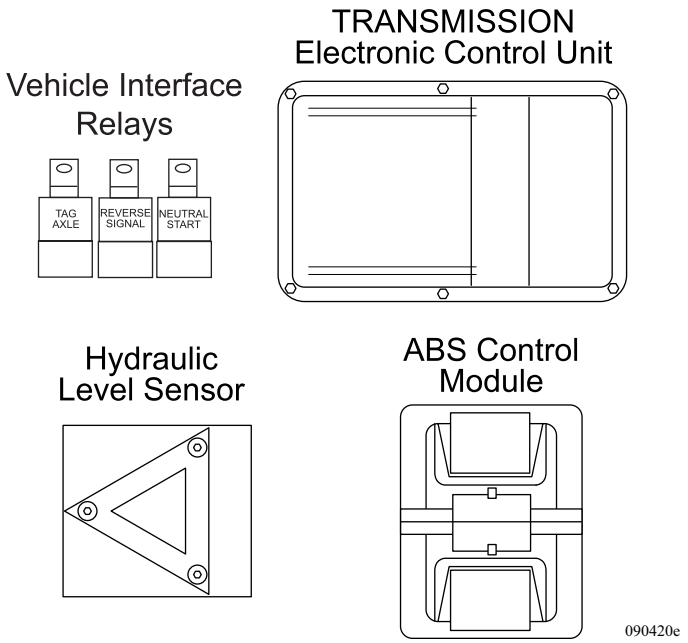

DIAGNOSTIC PLUG LOCATION

The Eaton, Cummins and Allison diagnostic plug is located under the left side of the dash.

Diagnostic Fault Codes:

The engine ECM will record three types of fault codes; Electronic Control System Faults, Protection System Faults and Maintenance Indicators. All faults recorded will be **ACTIVE** or **INACTIVE**. Not all faults will light an indicator when they are **ACTIVE**.

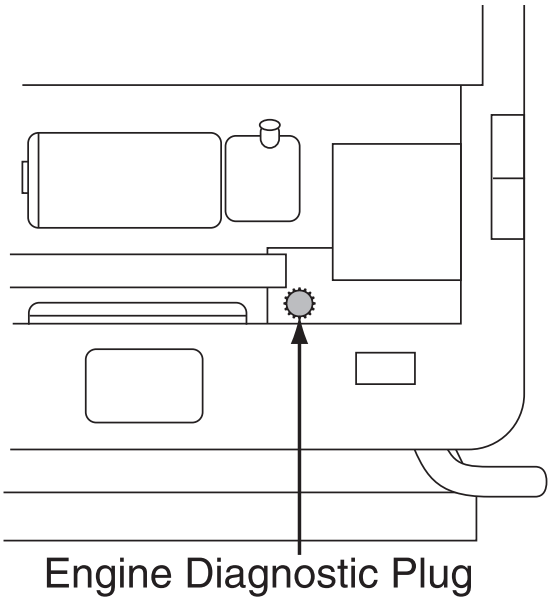

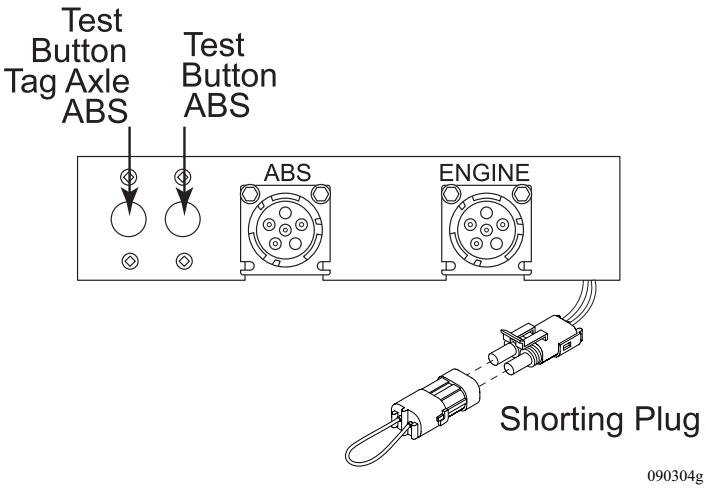

ALADDIN™ ENGINE DISPLAY

The Aladdin System will display engine and transmission statistics at a quick glance. Four additional engine and transmission screens can be accessed. These screens can be set to a rolling display, or use the joystick to pick an individual screen.

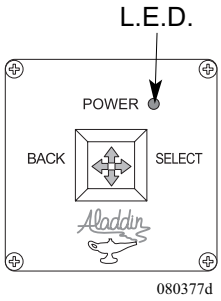

<u>NOTE:</u>
The backup camera and engine/transmission screens cannot simultaneously display.

To Display Engine and Transmission Status:

Use the joystick to enter the Engine/Trans Status screen from the Main menu. After entering the Engine/Trans Status screen, move the joystick right for a rolling display of the four sub-screens. Move the joystick up/down to select the desired sub-screen.

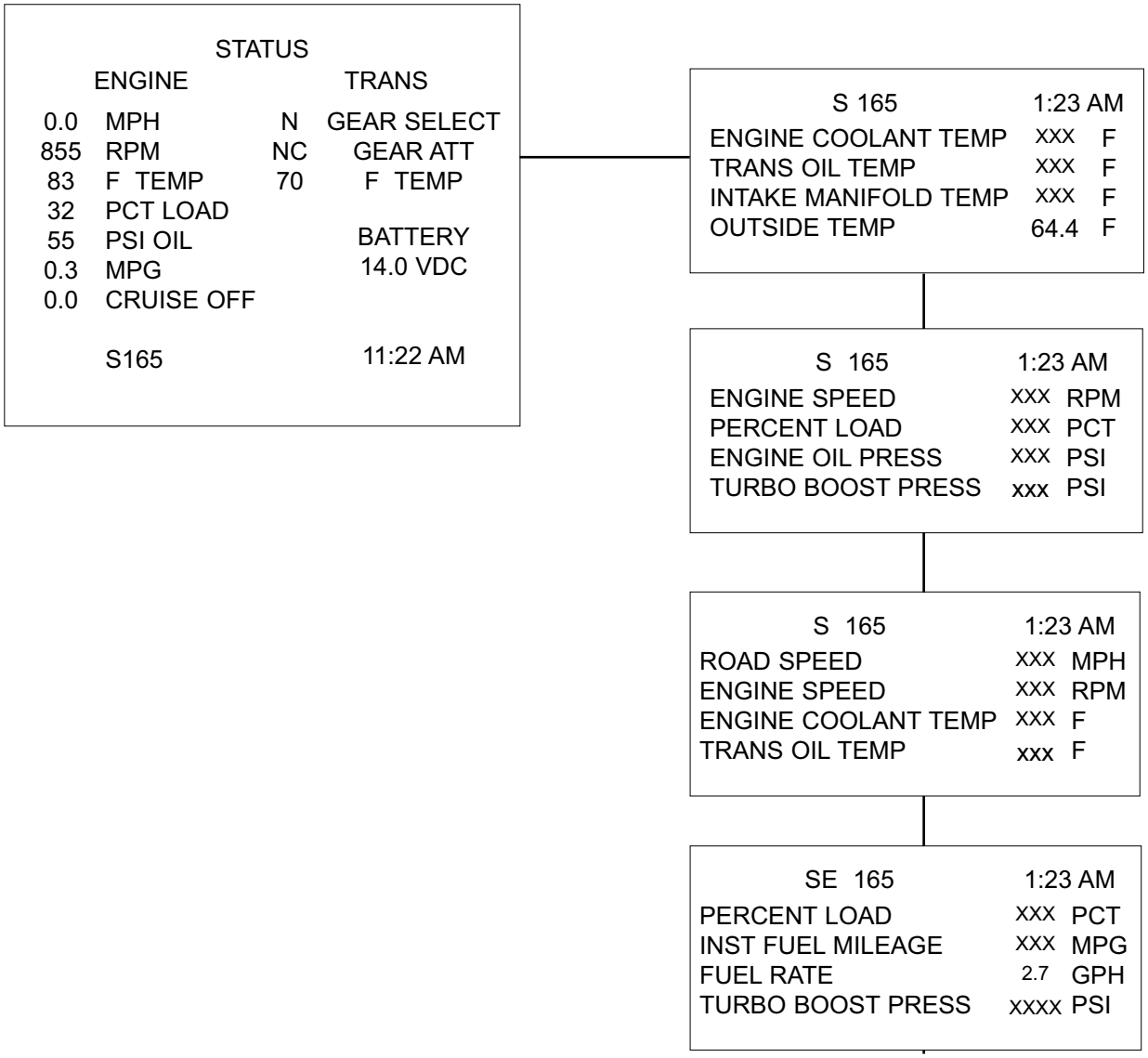

EXTERIOR BULB CHART	
LOCATION	**BULB NUMBER**
HEADLIGHT - LOW BEAM	9005UHB3
HEADLIGHT - HIGH BEAM	9005UHB4
FOG/DRIVING LIGHTS	HELLA H1 12 VOLT 55 WATT
PARK/TURN - FRONT	PHILLIPS 1235 E11
TURN - REAR	HELLA 12 VOLT P 21 WATT
TAIL/STOP LIGHT - REAR	SYLVANIA 2057
BACK-UP LIGHTS	SYLVANIA 1144
THIRD BRAKE LIGHT	MP#16620607 870 51-R
CLEARANCE LIGHTS	GE 194
LICENSE PLATE	GE 194
DOCKING LIGHTS	HELLA 893 12 VOLT 37.5 WATT
TROUBLE LIGHT	R1910YF
TURN SIGNAL - MIRROR	GROTE 4641 AMBER
GRAB HANDLE - EXTERIOR	GE 194
PORCH LIGHT	F8T5CW
COMPARTMENT BAY LIGHTS	GE FE F15T8-C

ENGINE "NO START" - FLOW CHART

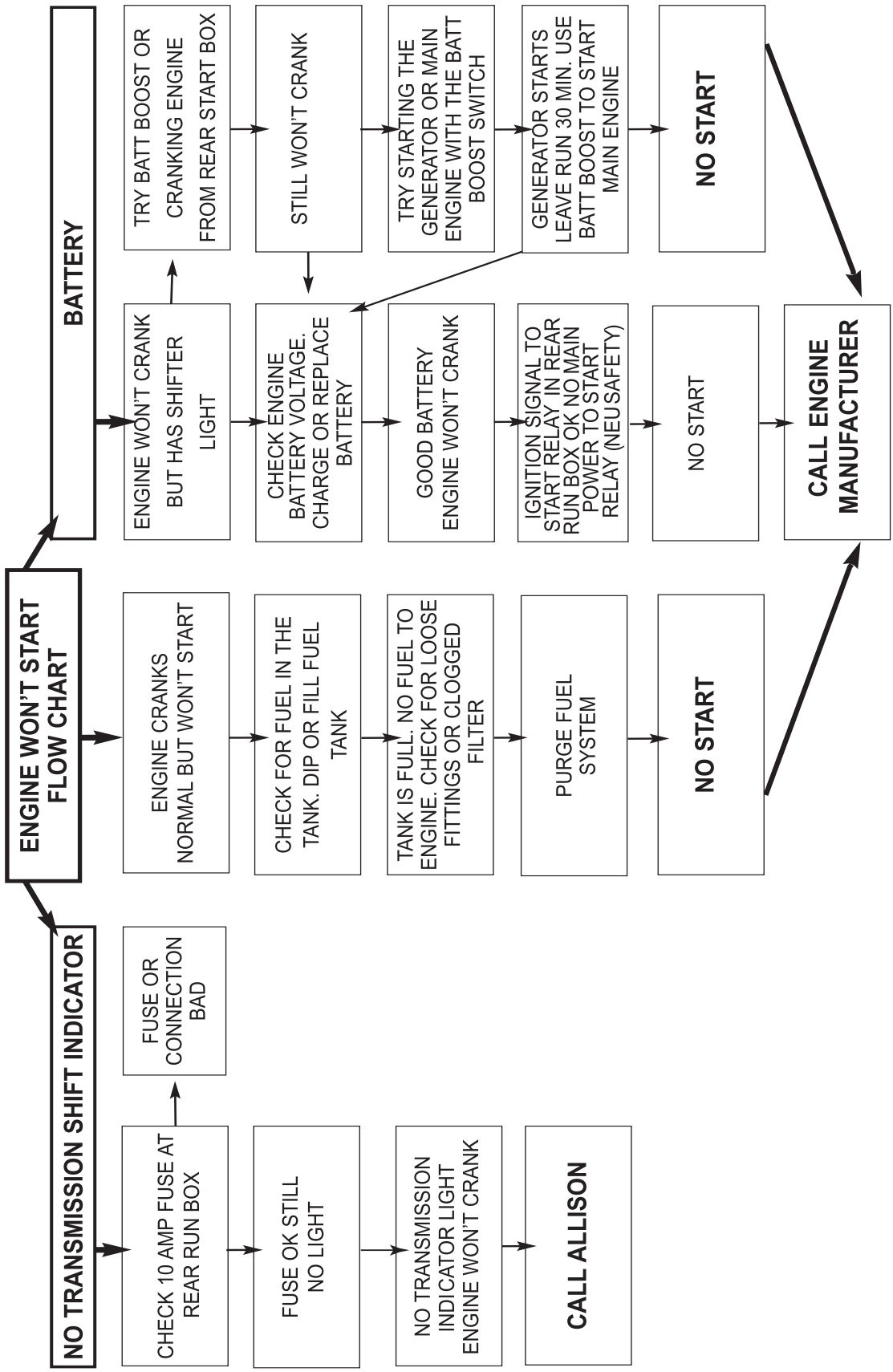

~ NOTES ~

~ NOTES ~

Signature 2005

Chassis Information • Section 10

CHASSIS - INTRODUCTION....423
AIR SUPPLY SYSTEM....424
Air Governor....426
Air Storage Tanks....426
Air Fittings....426
Air Coupler - Universal....428
Air System - Charging (External)....428
AIR DRYER....429
Desiccant Cartridge....430
Desiccant-Type Air Dryer....431
Air Dryer Cycle....431
AIR SPRING INSPECTIONS....432
HEIGHT CONTROL VALVES....433
Adjusting Ride Height....433
BRAKE SYSTEMS....435
Air Brakes....435
Park & Emergency Brake System....435
Brake Adjustment/Slack Adjuster....436
Brake Systems - Back-Up....437
ABS/ATC SYSTEM (ANTI-LOCK BRAKES)....438
FRONT AXLE....442
Alignment....443
Lubrication Maintenance Safety....445
Steering Components....446
Steering Column....447
Drag Link....448
Center Link....448
Steering Spindles....449
Control Arm Bushings....449
STEERING GEAR....450
DRIVE AXLE & DRIVE SHAFT....451
U-Joint Angles, Phasing & Drive Shaft Balance....454
TAG AXLE....455
Oil Change Intervals....457
Lubrication Maintenance....457
SHOCK ABSORBER....458
LEVELING - AIR....458
Automatic Air Leveling....460
Manual Air Leveling....462
LEVELING - HYDRAULIC (Opt.)....463
Manual Leveling....466
Automatic Leveling....466
Retracting Leveling Jacks....468
Manual Override....468
Maintenance....469
ENGINE - GENERAL INFORMATION....471
ENGINE DIAGRAM....472
Cummins - I.S.M-II Standard....472
Cummins ISX (Opt.)....474
Detroit Diesel (Opt.)....476
STARTING PROCEDURE....478
Normal Starting....478
Cold Weather....478
ENGINE OIL....480
ENGINE SHUTDOWN....483
Extended Engine Shutdown....483
COOLANT....483
Coolant Additives - SCA....485
CHARGE AIR COOLER....488
BRAKE - AUXILIARY (ENGINE BRAKE)....489
TRANSMISSION....490
Shift Selector....490
Check Trans Indicator....492
Periodic Inspections....493
TRANSMISSION LUBRICATING FLUID....493
Fluid Levels - Cold Check....494
Fluid Levels - Hot Check....495
FUEL SYSTEM....495
Fuel Requirements....495
Fuel Tank....496
Fuel Sender....496
Fuel Lines & Hoses....498
Fuel Filters....498
Rear Start Switches....500
HYDRAULIC SYSTEM....501
Hydraulic Pump....502
Hydraulic Cooler....502
Hydraulic Fan System....503
Thermovalve (ISM & Series 60 Engines)....503
Electric Thermovalve (ISX Engine)....504
Switching Valve....504
Electric Override (ISM only)....504
Fan Motor....505
Hydraulic Filter....505
Hydraulic Reservoir....506
AIR FILTER....507
Changing the Filter....507
Air Filter Minder....507
EGR FILTER (Detroit Only)....508
LUBRICATION MAINTENANCE....508
LUBRICATION CHARTS....512
SPECIFICATIONS CHARTS....518
Dimensions....518
Tank Capacities....518
Engine Specifications....519
Chassis Fluid Capacities....519
Generator Specifications....519
Belts & Filters....520
BATTERY SPECIFICATION CHARTS....521
METRIC/U.S. CONVERSION CHART....522
MAINTENANCE RECORDS....523

This section contains information and instruction regarding various components of the motorhome chassis. Follow the guidelines and procedures to help understand and operate the motorhome. Complete instructions for engine and transmission are located in their respective operators manual included in the Owner's Information File Box.

WARNING:
When welding is involved for motorhome repair or modification, only qualified, experienced technicians should weld on the chassis. Improper welding procedures and materials may weaken the assembly or result in damage that is not obvious and may not cause an immediate problem or failure. Unauthorized modifications or repairs to the chassis could result in a forfeiture of warranty coverage.

DANGER:
Due to the sensitive nature of the electronics on the chassis, the following precautions are required to protect electrical components in the motorhome chassis:

1. **Disconnect the (+) positive and (-) negative battery connection.**
2. **Cover electronic control components and wiring to protect from hot sparks.**
3. **Disconnect the terminal plugs from the engine Electronic Control Unit, located on the passenger side of the engine block.**
4. **Disconnect all the plugs from the transmission Electronic Control Unit, located in the storage bay between the frame rails.**
5. **Disconnect the wiring from the alternator.**
6. **Do not connect welding cables to electronic control components.**
7. **Attach the welding ground cable no more than two feet from the part to be welded.**

The Roadmaster chassis design provides exceptional balance, handling and braking characteristics. The Roadmaster chassis is an engine and frame unit featuring a semi-monocoque tubular all steel frame design, providing greater structural integrity and uniform stress distribution. Incorporated in the Roadmaster chassis is the exclusive air glide suspension system using eight outboard mounted air bags and shock absorbers.

The tag axle uses two inboard mounted air bags and shock absorbers. The design and set up provides the smoothest ride, best handling and trouble free service while delivering top notch drivability. The chassis has either a three-point hydraulic leveling system, an air leveling system or both. The Roadmaster chassis design offers unsurpassed ease of maintenance and service.

The towing system rating incorporated in the construction of the frame is 10,000 lbs. towing and 1,000 lbs. tongue weight.

100168b

Tag located on the curbside, from behind front wheel, and in generator compartment.

The Roadmaster's exclusive cushion air glide suspension consists of front and rear axles, with leading and trailing arms in a parallel four link arrangement. A panhard bar on each axle controls side motion. Each axle mounts to a wide platform H-frame that carries the coach body on eight outboard mounted air bags (four front and four rear). The tag axle uses two in-board mounted air bags. Each air bag is paired with a Bilstein gas shock absorber. The suspension control arms attach to the frame through bushings that require no lubrication. The preset suspension ride height automatically maintains the proper suspension height throughout the load range.

AIR SUPPLY SYSTEM

The air compressing system on the motorhome consists of: a compressor, governor, dryer, front tank and a rear tank. The compressed air system operates several items, including brakes, suspension, air horns, air gauge and the stepwell cover. The air system is charged by a gear driven air compressor mounted on the engine. As engine speed increases, compressed air output increases. When the air is compressed, heat is generated. Heat dissipates as the air is discharged from the compressor. Moisture condenses in the compressed air as it cools and enters the air dryer to be filtered. The filtered air charges the front air tank which is divided in two sides: a wet and a dry side. The compressed air enters the wet side before entering the dry side. A discharge line from the dry side of the front air tank charges the rear air tank. Discharge lines use inline check valves to prevent a back flow of compressed air.

The pneumatically operated items are divided into two categories: brakes and accessory air. Brakes have full use of supplied air pressure. Accessory air items, such as air horns or stepwell covers, receive air through pressure protection valves (PPV). The PPV will not allow compressed air flow until the system reaches approximately 60 psi. In the event of an air system problem, the pressure protection valve will leave a reserve air charge for braking. Pressure protection valves are installed for safety.

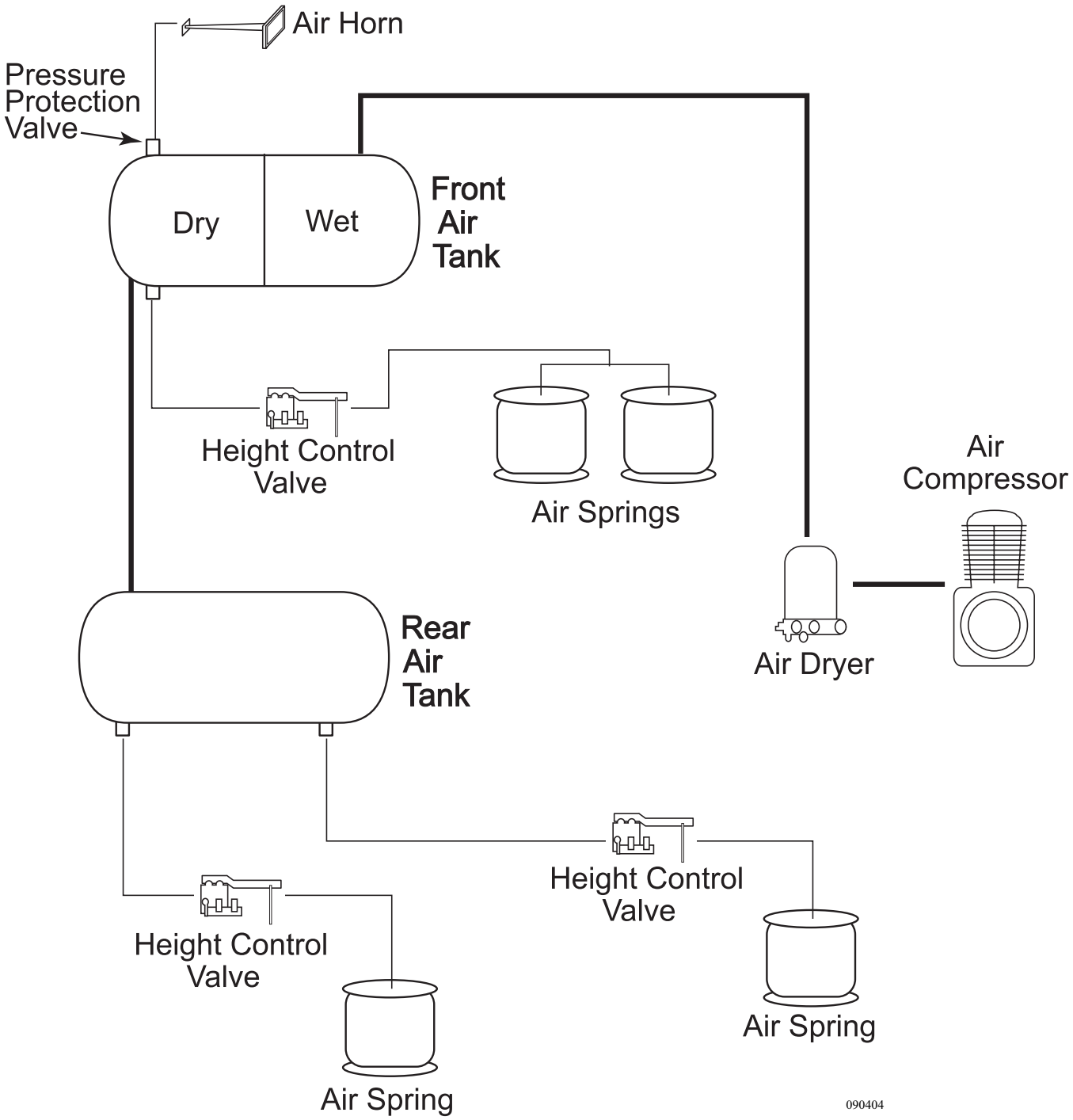

Typical Air System Layout

Air Governor

The air governor, located in the engine compartment, regulates the air compressor to cut-in and cut-out, keeping the air system in the specified operating range of 105 to 130 psi, and sending an air "purge" signal to the Air Dryer.

Cut-in pressure of approximately 105 psi is factory preset from the governor manufacturer and is not adjustable. Cut-out pressure is calibrated to 130 psi. When cut-out pressure is reached, the governor will send an air purge signal to the Air Dryer. This opens the purge port of the Air Dryer, expelling moisture. The purge action of the Air Dryer is identified by the short release of air at the rear of the motorhome.

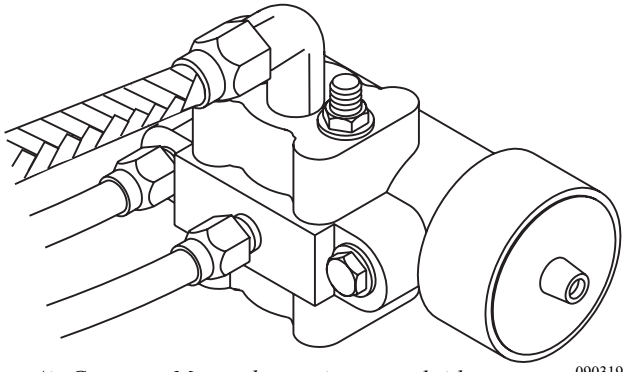

Air Governor: Mounted to engine on curbside 090319

Air Storage Tanks

The front and rear air tanks should be manually drained once a month, or more, depending on operating conditions where humidity is high. The front air tank has a drain valve for both the wet and dry side. The rear air tank only has one drain valve. Open the drain valves until all air is purged from the tanks, allowing five extra minutes for moisture to expel. Remember to close the tank drain valves. Both air tanks have a pressure relief valve which are set to release at approximately 150 psi.

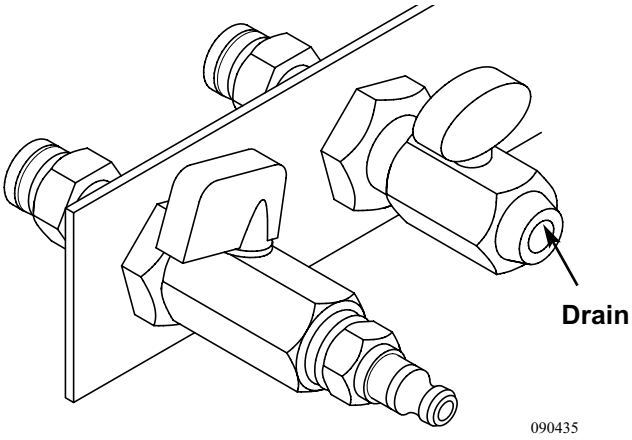

090435

Located Generator Compartment on curbside.

Air Fittings

Push-in fittings, used to connect air hoses between pneumatically operated items, are designed for quick and easy maintenance and repair. Sizes and types of fittings vary for different applications. Threaded fittings adapt the push-in fittings to connect pneumatically operated items. Main parts include the release ring, locking ring, solid brass body and special rubber compound O-ring. Damaged hoses can be repaired by splicing.

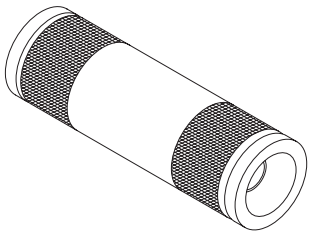

Splice fitting for repairs 090445

To Disconnect Hose:

- Push hose into fitting.
- Push release ring down against locking ring portion of the fitting body.
- While holding the release ring down, pull hose away from fitting.

To Connect Hose:

- Push hose into fitting through the release ring and the O-ring, using a slight twisting motion to seat firmly against the internal tube stop.
- Pull hose away from fitting to expand and set inner seal. Ensure hose is properly retained in fitting.

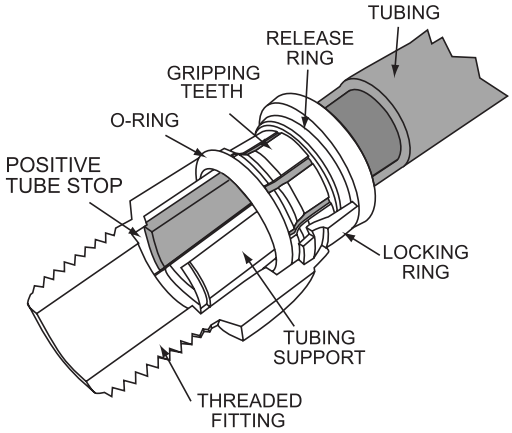

Cut-away of push-in fitting.

090466

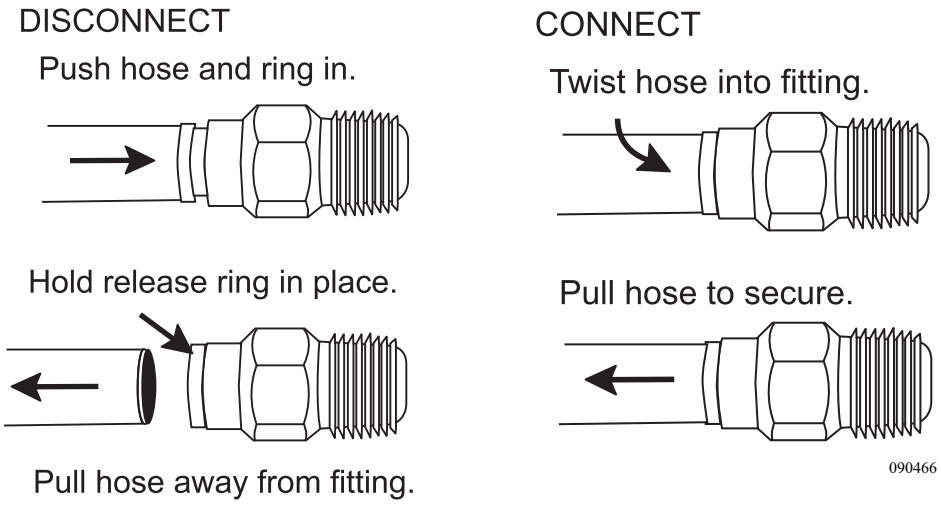

090466

090466

NOTE:

When putting air hose back into fitting, be sure that hose is cut as squarely as possible so that the hose will evenly seal in the fitting. The cavity of the positive tubing stop provides support to prevent leakage.

WARNING:

Do not remove air hoses from fittings while system is pressurized. Serious personal injury may occur.

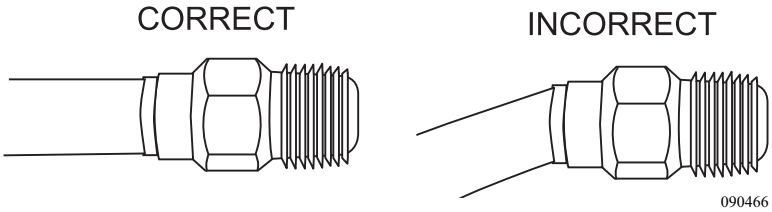

090466

Air Coupler - Universal

A remote air supply coupler, provided for convenience, is located in the roadside compartment behind the front tire. The universal female fitting will accept several types of ¼" ID male air fittings, including type C automotive. The auxiliary air fitting may be used to inflate tires, air mattresses or other pneumatic items. This fitting is not designed to charge the air system on the motorhome. The air supply for the auxiliary air fitting is charged from the front air tank through a pressure protection valve.

To Use the Universal Air Coupler:

- Remove the plastic protective dust cap.
- Using a firm grip, insert the air fitting into auxiliary air supply. The locking collar is spring loaded and will lock automatically when the fitting is properly inserted.

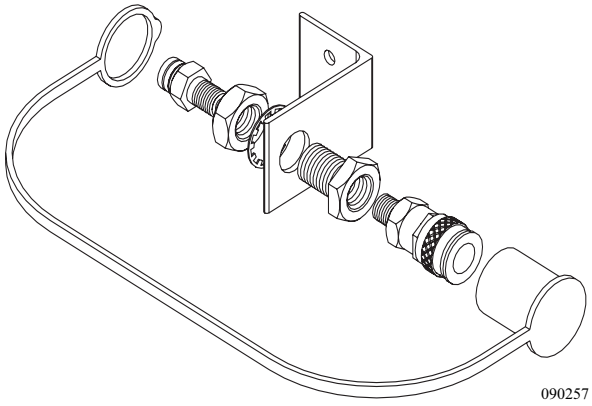

To remove fitting:

- Firmly grip the air hose near the fitting to prevent recoil.
- Slide the locking collar back to release fitting. The collar will lock into the open position when fully retracted.
- Replace the protective dust cap when finished.

NOTE:
There are small air pressure restrictions in the pressure protection valve and tire stem valve. Due to this restriction, the maximum amount of tire pressure achieved when the system is used to fill a tire is approximately 95 to 105 psi, with the air system on the motorhome charged to 120 psi. Maximum outlet air pressure is achieved when the air system completes the fill cycle indicated by the purge cycle of the air dryer.

Air System - Charging (External)

The air system on the motorhome can be charged from an external air supply source. Located in the generator compartment is a type C automotive male fitting. Caution should be used when charging the air system from this fitting. The air supplied from an external source may contain moisture. Compressed air introduced into the air system on the motorhome from this fitting is not filtered by the air dryer. The auxiliary air charge fitting will charge the front and rear air tanks. A shut-off valve is installed to prevent air from escaping.

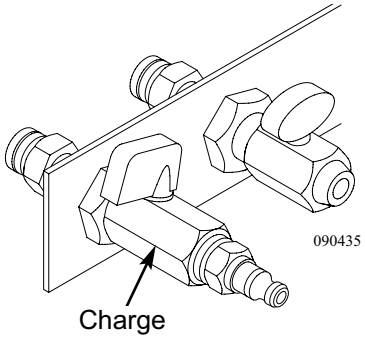

CAUTION:
The external air supply source should be regulated to charge the air system on the motorhome no higher than 120 psi. Damage to the air system or pneumatically operated items may occur

The air dryer, located underneath the motorhome next to the transmission, removes moisture from the compressed air system to prevent freezing of brakes or other pneumatically operated items. The three functions of the air dryer are cooling, filtering and drying the air going through the motorhome air system. If an excessive amount of water is present when performing the monthly air tank drain service, the filter for the air dryer may need to be changed.

Operation:

During system pressure build-up, compressed air passes into the air dryer where the filter system removes contaminants and passes the air into the drying stage. When the compressor unloads, the water is expelled and the dry air flows back through the dryer, drying the desiccant for the next cycle. Initially, moisture condenses in the base of the dryer. Moisture-laden air passes through the desiccant bed in the air dryer cartridge and is dried.

- The compressor intakes water vapor with the air. The water vapor condenses as it cools.
- The air dryer prevents water accumulation in air lines that could damage seals and valves and wash away lubricants.
- The air dryer also prevents water accumulation in the air lines that can freeze and damage air system components.

Air Dryer Components:

1. **Purge Valve:** A valve located on the bottom of the air dryer base that remains open during a compressor unload cycle to allow collected moisture, condensation and contamination to expel from the air dryer during the purge cycle.

2. **Pressure Relief Valve:** Protects the air dryer from over-pressurization.

3. **Regeneration Valve:** Controls regeneration of the desiccant by allowing air from the supply and secondary tanks to bypass the outlet check valve.

4. **Heater Power Connection:** Provides 12 Volt DC power to the heating element.

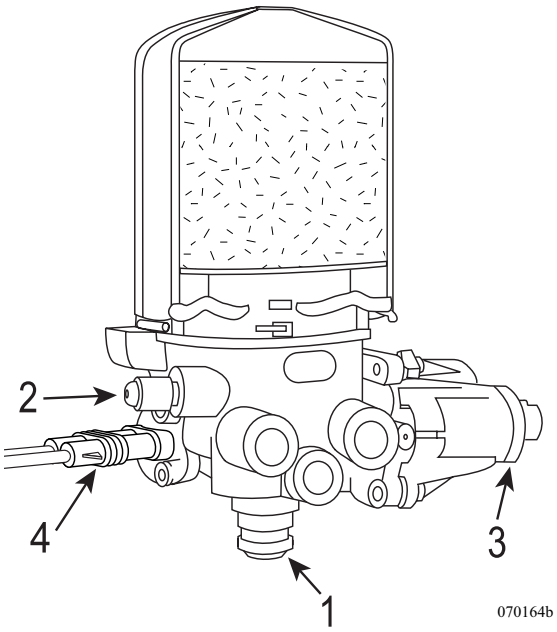

In extreme cold, verify that the air dryer heater is in good working order. The 100-watt heater in the air dryer is controlled by ignition power. The heater turns on below 45° F and off when the air dryer temperature is above 86° F. The fuse for the heater is located in the front roadside electric bay.

WARNING:
Remove all pressure from the air system before disconnecting any component, including the desiccant cartridge. Pressurized air can cause serious personal injury.

Desiccant Cartridge

070165

The replacement kit contains one cartridge and one O-ring.

To Replace the Cartridge:

1. Loosen and remove the old cartridge. Use a strap wrench, if necessary.
2. Remove and discard the O-ring from the dryer base.
3. Inspect and clean the seal seat. Repair any minor damage.

NOTE:
If the seats are damaged so badly that a tight seal cannot be maintained, replace the air dryer.

4. Install a new O-ring.
5. Lubricate the O-Ring on the stem with a thin layer of grease.
6. Lubricate the cartridge seal with a thin layer of grease.
7. Thread the replacement cartridge onto the base until the seal touches the base. Tighten the cartridge ONE additional turn. **DO NOT OVERTIGHTEN.**

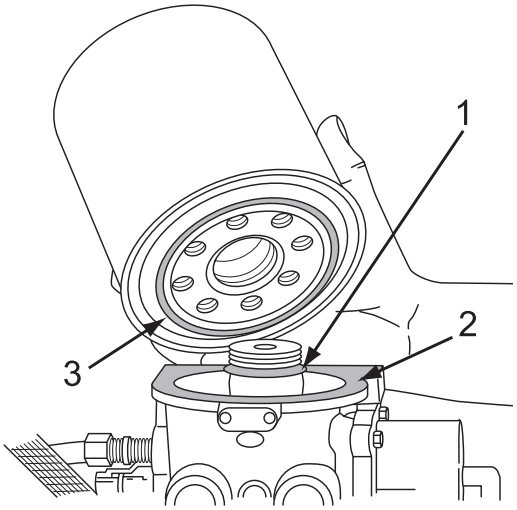

1. O-Ring
2. Seal Seat
3. Cartridge Seal

080223

REPLACEMENT REQUIREMENTS		
Components	**When to replace?**	**Why?**
Desiccant Cartridge	Every two to three years. When compressor is replaced. Water in supply tank.	Preventive maintenance. Contaminated cartridge. Saturated or contaminated cartridge, high duty cycle (wrong application of air dryer).

Desiccant-Type Air Dryer

1. Warm, humid air from the compressor condenses into either water or water vapor before entering the air dryer.
2. A desiccant-type air dryer protects the motorhome air brake system by drying moisture-laden air before it passes through the air reservoirs and into the brake system.
3. Water collects in the base of the dryer when warm air condenses the water before it enters the dryer, or inside of the dryer before the water reaches the desiccant.
4. The desiccant material then removes additional water vapor, further drying the air.
5. During regeneration phase, the regeneration valve and pressure-controlled check valve remove water from the desiccant bed with a backflow of dried, expanded system air.

Air Dryer Cycle

The governor turns the compressor on when the supply tank pressure drops below cut-in pressure. Compressed air passes into the air dryer at the inlet port:

1. Moisture-laden air and contaminants pass through the desiccant.
2. Moisture is retained by the desiccant. Moisture also collects in the base of the dryer.
3. When the compressor unloads the purge valve opens. The governor turns the compressor off when the system reaches cutout pressure (approximately 120 psi).
4. The dryer purges and expels water collected in the dryer base.
5. When the regeneration valve opens, the dry system air flows back through the dryer. A small charge of air from the front air tank backflows through the filter. The backflow dries the desiccant, preparing it for the next cycle.

AIR SPRING INSPECTIONS

Listed below are items that can be checked when the motorhome is in for periodic maintenance.

NOTE:
Never attempt to service the air suspension on a motorhome with the "air spring" inflated.

- **Inspect** the Outer Diameter (OD) of the air springs. Check for irregular wear or heat cracking.
- **Inspect** the air lines to make sure contact does not exist between the air line and the OD of the air springs. Air lines can rub a hole in an air spring very quickly.
- Check to see that there is sufficient clearance around the complete circumference of the air spring while at maximum diameter.
- **Inspect** the OD of piston for buildup of foreign materials. (On a reversible sleeve style air spring, the piston is the bottom component of the air spring.)
- The correct ride height should be maintained. All motorhomes with air springs have a specified ride height established by the manufacturer. This height should be maintained within ¼ inch. This dimension can be checked with the motorhome loaded or empty.
- The leveling valves (or height control valves) assist in ensuring the total air spring system works as required. Clean, **inspect** and replace if necessary.
- Make sure to check shock absorbers for leaking hydraulic oil and worn or broken end connectors. If a broken shock is found, replace it immediately. The shock absorber will normally limit the rebound of an air spring and keep it from over extending.
- Check the tightness of all mounting hardware (nuts and bolts). If loose, tighten. Do not over-tighten.

Cleaning:

The approved cleaning method is to use soap and water, methyl alcohol, ethyl alcohol or isopropyl alcohol. Unapproved cleaning methods include all organic solvents, open flames, abrasive and direct pressurized steam cleaning.

HEIGHT CONTROL VALVES

Height Control Valves (HCV) inflate or deflate air springs to maintain proper suspension height throughout the load range. Two Height Control Valves are installed at the rear drive axle to control rear suspension height and left or right tilt of the motorhome. A separate HCV is installed to control front suspension height. The three HCVs mount to the main frame of the motorhome, above the axles, with a linkage rod connecting the valve to the axle.

Actuating components inside of the valves are oil dampened to reduce valve reaction to momentary suspension bounce and rebound. When a constant suspension change occurs, such as a load change or weight transfer through a sustained corner, the valve reacts by adding or purging air from the air springs as needed.

The air springs mount between the axle H-frame assembly and the two main frame rails. Air spring support plates mount to the main frame and the H-frame. There is a specified distance the air spring must maintain between the mounting plates. Other than specified distance between the plates will compromise ride quality and handling, and affect shock absorber travel, drive shaft angle, as well as various other running gear components.

Should it become necessary to check the suspension ride height, start with the motorhome on a flat level surface. The air system must be fully charged with the suspension normalized at ride height. Specified distances may vary plus or minus ¼". Small offset adjustments to the rear valves may be necessary to compensate for slight tilt. Example: Adjusting the curbside rear height control valve up will pivot the roadside front corner down.

NOTE:
Drive shaft angle is affected by the suspension ride height. Improper drive shaft angle can damage suspension or shorten the life of universal joints. Shock absorbers and air springs are in travel centers at proper ride height. The ignition must be on for the suspension to operate when equipped with HWH air leveling.

Adjusting Ride Height

Preparations to adjust the suspension ride height:

- Park the motorhome on flat, level surface.
- Fully charge the air system.
- Turn ignition on.
- Ensure suspension is at normal ride height.
- Ensure air level system is in travel mode.

Start by checking the distance in the front.

1. Measure the distance between the mounting plates of the air springs.
2. If the measurement is off, loosen the adjusting lock nut at the eccentric slot on the valve.
3. Move the plastic arm up to raise suspension height and inflate all the front air springs. Move the plastic arm down to lower suspension height and deflate the air springs. Make adjustments in small increments.
4. After obtaining the specified distance, insert a 1/8" or 7/64" inch twist drill bit into the plastic arm and valve body. This will center the travel of internal piston. Tighten adjusting lock nut between 60-80 in/lbs.
5. Check adjustments made by using the Air Dump switch to deflate air springs. Start the engine and allow the air system to become fully charged. Allow the suspension to adjust and come to a neutral setting.
6. Re-check the suspension height measurement. Follow the same procedure for each rear control valve.
7. Re-check the front suspension height after adjusting the rear height control valves.

NOTE:
Do not modify length of the linkage rods. Make any necessary adjustments using eccentric slot on the ride height control valve.

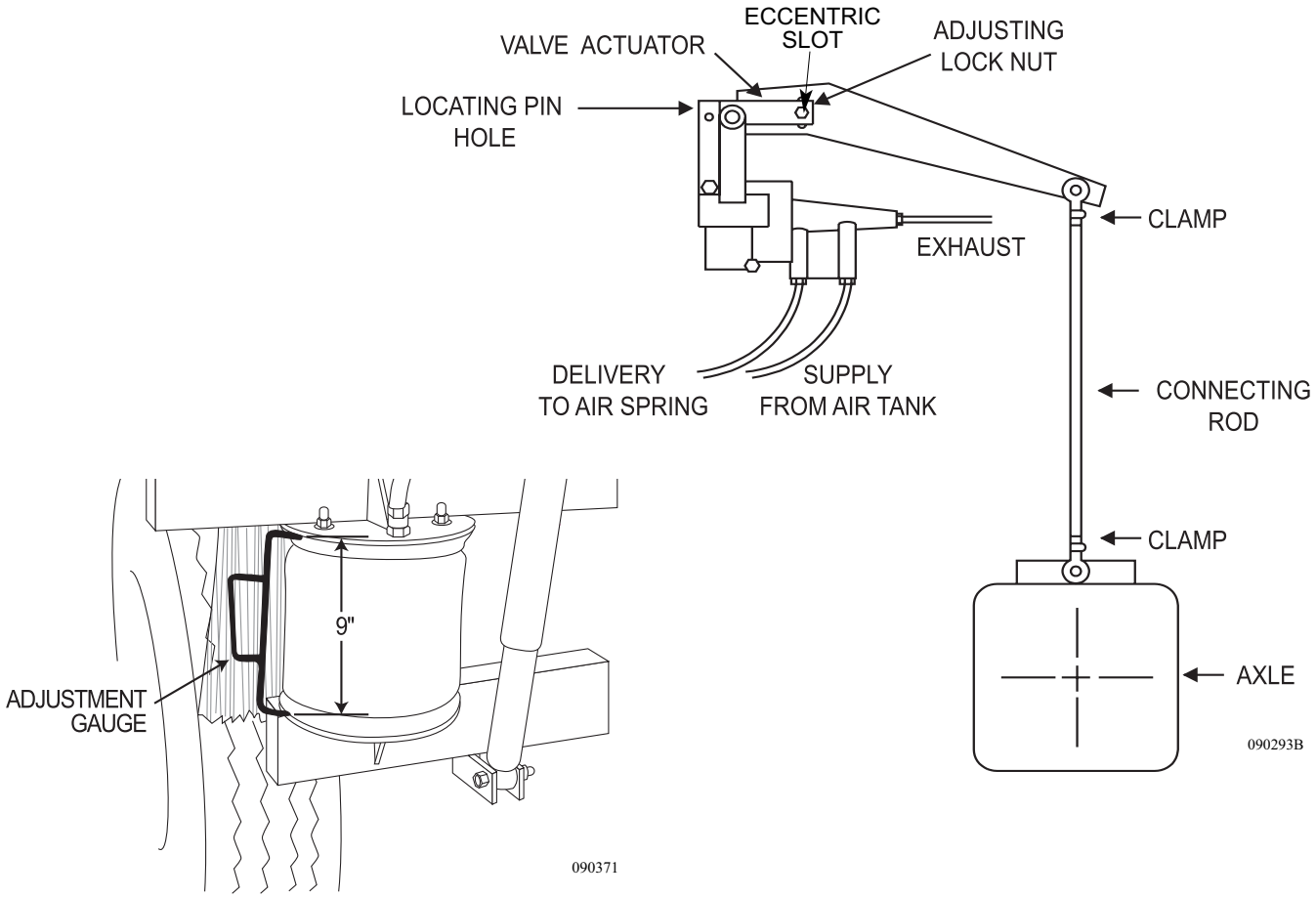

Measurement is: Front = 9 in., Rear = 9 in.

The air brake system on the motorhome differs from a conventional automotive hydraulic braking system and should be treated differently. Proper maintenance and lubrication are the keys to keeping the air brake system in proper working order.

The air system supplies air to the foot brake, or treadle valve. Pushing down on the treadle valve supplies an air charge signal to a sealed brake chamber that consists of a spring and air bladder. The air charge signal pushes on the bladder and extends a threaded rod connected to the automatic slack adjuster. The slack adjuster rotates the S-cam expanding the shoes against the drum. Air disc brakes follow much the same principle, with the exception of the threaded rod directly activating calipers.

Consideration needs to be given to stopping distances and air system pressures. The motorhome requires longer stopping distances. Each brake application uses air from the air system, and engine speed is directly proportional to how fast that air system is replenished. Prepare for downhill grades. It may be necessary to select a lower gear and/or use the engine brake. Use individual short brake applications down long hills, rather than "riding" the brakes, to extend the life of the brake lining. Avoid overheating the brakes. Hot brakes have less stopping power. When maneuvering the motorhome around small areas, or backing into spaces, several individual brake applications might be made. Watch the air gauge. When preparing to back into a space swing the motorhome so it is aligned with the parking slot before backing up.

The air braking system on the motorhome is equipped with a low air pressure warning system safety feature. Should a low air condition arise while the vehicle is in operation, a warning buzzer will sound and a dash warning light will illuminate at approximately 60 to 65 psi (pounds per square inch) to alert the operator.

Park & Emergency Brake System

The Park and Emergency Brake System (Spring Brakes) applies to the rear drive axle only. When the park brake is applied, air is released from the rear brake chambers, allowing the large spring in each rear brake chamber to manually push the brake pads against the rotor. The air system must be charged above 35 psi to allow the park brake to release. Pushing down on the park brake handle charges the rear brake chambers with air pressure, overriding the emergency brake springs and releasing the brakes. In the event of air loss while the vehicle is under operation, the park brake will automatically apply (this occurs at approximately 30 psi), acting as an automatic emergency brake system.

When preparing to depart, allow the air system to achieve full air pressure as indicated by the air gauge needles. Listen for the air dryer to purge, indicating that the air dryer is functioning. Look and listen for abnormalities. Abnormal air pressure readings by either needle of the air gauge alerts the operator to have the air system checked to avoid an untimely failure.

Should a failure occur in the air system, preventing the air pressure from building, it may become necessary to "cage" the spring brakes ("cage" procedure in **Section 2** ***Towing Procedures*** **-** *Disabling Parking Brake*). This is an emergency procedure only. Caging the rear air brake chambers manually overrides the spring brakes and allows the vehicle to move. This procedure does not affect normal service braking.

NOTE:
When the park brake is released, the Park illumination lamp will remain lit until air system pressure is above 65 psi.

WARNING:
When parked, if the air tank is not depleted, there is the possibility of an accidental release of the parking brake. Traveling with small children and/or pets may require a small block to be fabricated to prevent accidental release. The block should be placed under the knob on the dash panel. A wooden clothes pin, clasped at the base of the shaft, will work.

Brake Adjustment/Slack Adjuster

The braking system is equipped with automatic slack adjusters. As brake lining wears, the slack adjusters will automatically ratchet on the return stroke as needed. This ratchet action will keep the brake lining at proper adjustment. Brake adjustment should not be necessary. Automatic slack adjusters and the connecting S-cam shaft require periodic lubrication and inspection.

NOTE:
Replacement parts should be of the same original equipment size and type. Mixing brake components may result in unequal braking action. Brake maintenance is not covered by the manufacturer.

WARNING:
Brake lining may contain asbestos material and should only be serviced by qualified service technicians who are trained in the appropriate precautionary procedures. If any loss of braking effectiveness or abnormal braking indications are noticed, the brakes and slack adjusters should be inspected by a qualified brake technician.

The motorhome air braking system is equipped with several backup safety systems and warning alarms in the event of air system failure. For example: should the air compressor fail to charge the air system and low air gauge readings go undetected, a low air pressure warning buzzer will sound and a low air pressure dash warning indicator lamp will illuminate. These warning indicators occur at approximately 65 psi. This will alert the operator of an impending situation. If the motorhome is allowed continued operation, the pneumatic emergency spring brake relay valve, installed in the air system, senses the low air pressure condition and will release the air charge from the spring brake air chambers on the rear drive axle. In this case, the park brakes will automatically apply at approximately 30 psi. This safety backup system acts as an automatic emergency brake system.

Another backup safety is the air system separation of the front and rear brakes, implemented by using two air tanks. One tank is located in the front and the other is located in the rear. This separation allows the front air tank to operate the front brakes; the rear tank operates the rear drive axle brakes and tag axle brakes. This tank division gives reassurance in case one tank experiences a failure of an accessory air item allowing the compressed air to escape.

Accessory air items are other pneumatically operated items such as the air horn, step well cover, vacuum generator, etc. The accessory air items operate only when air tank pressures exceed 65 psi. This is done with pressure protection valves. Should an accessory air item fail, the pressure protection valve (PPV) reserves the remaining air pressure of 65 psi for braking. This will leave the motorhome with one air tank fully charged for safety backup.

The rear air tank also has a safety backup - the safety inversion valve. The inversion valve senses the absence of rear air tank pressure. In this case the inversion valve will allow the operator to make a modulated spring brake application, made in conjunction with the emergency spring brake relay valve. The inversion valve allows the front air tank pressure to recharge the rear brake chambers after the modulated spring brake application has been made. This backup system implements use of all the brakes, allowing the operator to bring the motorhome a safe stop. In case of all compressed air charge escaping from the front air tank, the operator will still have full use of the rear brakes.

ABS/ATC SYSTEM (Anti-lock Brakes)

The motorhome is equipped with an anti-lock braking system (ABS) and automatic traction control system (ATC). The ABS system monitors wheel rotation speeds by using a 100-tooth magnetic tone ring mounted to the hub. Revolving with the wheel, the magnetic tone ring is polarized giving positive and negative pulsations. A stationary sensor is mounted adjacent to the tone ring monitoring the magnetic pulses. The pulses are monitored by the ABS electronic control unit (ECU).

The ECU monitors all wheel sensors at the rate of 100 times per second. The ECU controls Pressure Modulator Valves. Pressure Modulator Valves have two electric over air solenoids, a hold solenoid and a release solenoid. The modulator valves are open under normal braking, allowing a straight through air signal from the treadle valve to the brake chamber. Should a wheel lose traction under a braking application, the ECU will energize the hold solenoid of the Pressure Modulator Valve to interrupt the air signal from the treadle valve to the brake chamber. The release solenoid vents the existing air signal, at the brake chamber to the atmosphere, allowing the skidding tire to regain traction. Skidding tires have less tractive efficiency. It is possible, under certain conditions, to have the wheel(s) skid with a normal functioning ABS system.

The ABS itself does not apply additional braking power. The purpose of the ABS is to limit wheel lock and decreased stopping distance. Cautious driving practices and maintaining adequate safe distance when following vehicles is the key to safe vehicle operation.

WARNING:
The ABS/ATC system is designed to increase tire to road surface traction but cannot overcome naturally occurring laws of physics. The ABS/ATC system, combined with safe driving practices, will reduce the possibility of wheel skid and loss of lateral stability.

ABS Component Function:

- Speed sensors and tone rings on each wheel monitor wheel rotation.
- Each speed sensor communicates wheel rotation pulses to the Electronic Control Unit.
- ECU receives the speed sensor inputs, interprets the signal pulses, calculates speed and acceleration rates of each wheel.
- Based on the speed sensor input, the ECU detects impending wheel lock and operates the ABS Modulator Valves required for proper control. The Modulator Valves are operated in the air, release or hold modes to regulate air pressure to the brake chambers.
- Braking force is applied at a level which minimizes the stopping distance while maintaining as much lateral stability as possible.

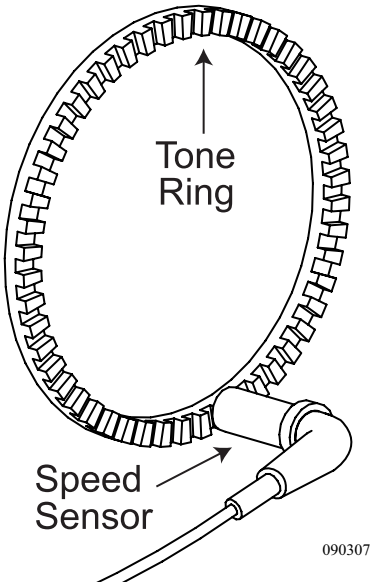

ABS Warning Lights:

The ABS will perform a dash indicator lamp check and self-diagnostic test each time the ignition is switched to the on position.

- When the ignition is turned on, the ABS (steer and drive axle) and ABS TAG (tag axle) indicators illuminate momentarily (2.2 seconds) verifying the self-diagnostic test. If the ABS or ABS TAG indicator lights remain on, or illuminate while the motorhome is being operated, this indicates a fault in the anti-lock brake system. This fault will not affect normal service braking. The motorhome will need to go to a service center to repair the problem.

ABS Diagnostic Button:

By properly actuating the ABS diagnostic button, system configuration codes and fault codes can be retrieved as blinked sequences on the ABS warning light. System configuration codes are sequences of four blinked digits while fault codes are sequences of two blinked digits. Refer to an authorized Eaton/Roadranger dealer for a list of blink code sequences. If the Diagnostic button (located under the dash to the left of the steering column) is not pressed correctly for a specific readout, stop and start over at the beginning of the procedure. All blink codes are displayed by the ABS warning light only. The ATC light does not display blink codes.

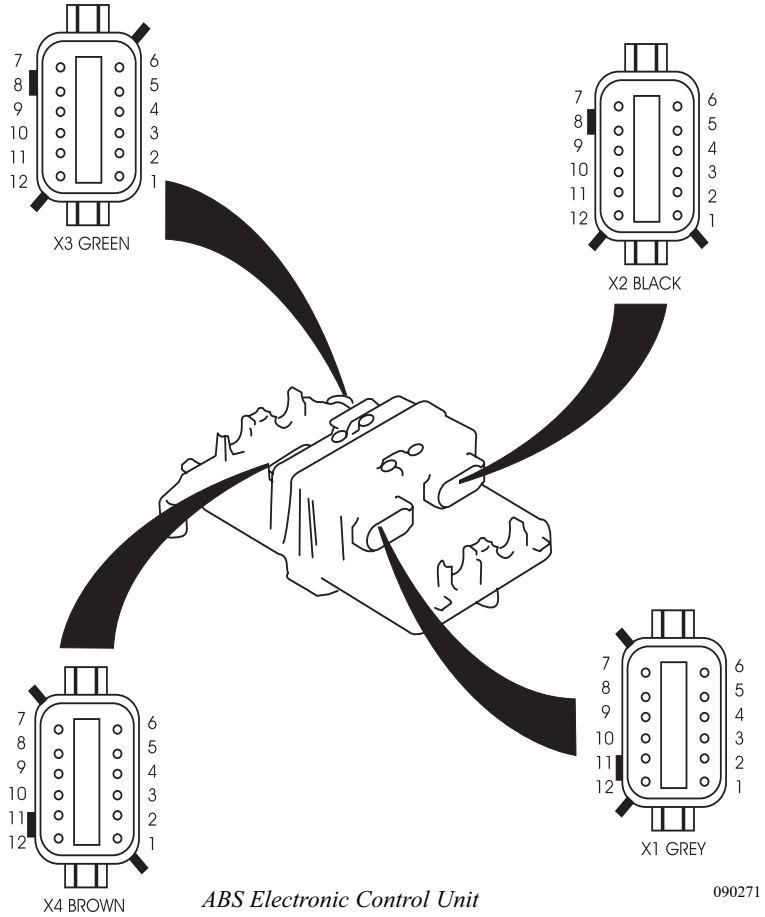

ABS Electronic Control Unit

<u>NOTE:</u>
All blink codes are displayed by the ABS warning light only. The ATC light does not display blink codes.

<u>INFORMATION:</u>
Contact a certified Eaton service repair center at (800-826-4357) for more information.

If a Fault Code Occurs:

1. Write down system configuration codes and fault codes.
2. If the system configuration is correct, clear the fault codes. The process for clearing the fault codes and reconfiguring the ECU is the same when using the diagnostic button.
3. After clearing fault codes, retrieve the fault codes once again to confirm the inactive fault codes were cleared. Only active codes should display.

Reading Configuration Codes:

1. Turn the ignition key to ON.
2. Apply and release air brakes.
3. Press and hold the diagnostic button for two seconds and release. Immediately press the diagnostic button a second time, hold for two seconds and release.
4. The four-digit configuration code is retrieved and should display 1-2 pause 4-5.

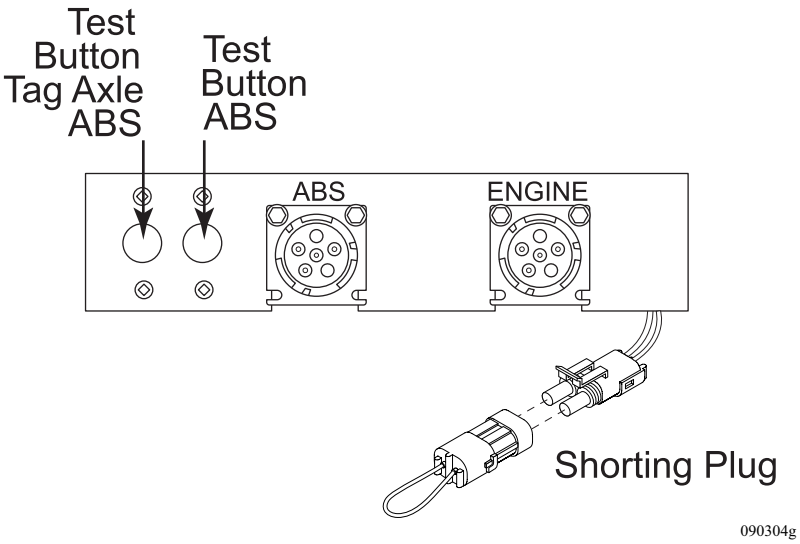

Retrieving Fault Codes:

1. Turn the ignition key to ON.
2. Apply and release service brakes.
3. Press and hold the diagnostic button for two seconds and release.
4. Two-number blink codes are retrieved. A two-digit display of 1-1 indicates no faults; The ABS system is functioning properly.

Clearing Fault Codes and/or System Configuration:

1. With the ignition OFF, press and hold the diagnostic button.
2. Turn the ignition key to ON while pressing the diagnostic button.
3. Wait two seconds and release the diagnostic button.
4. Press and release the brake pedal.
5. The ECU is reconfigured to match connected components and to clear fault codes.
6. Repeat the "Retrieving Fault Codes" procedure to verify that fault codes are cleared.

Disabling ATC for Dynamometer Testing:

When a dynamometer test is performed by a qualified service technician the ATC must be disabled. The dynamometer provides a way to test engine output power under load to measure a range of parameters, i.e. horsepower, torque, temperatures, combustion output and fuel consumption.

1. Turn the ignition key to **ON**.
2. Press and hold the diagnostic button for at least three seconds and release.
3. The ATC light turns **ON** and the **ABS** light blinks **17-8**, indicating the ATC system is disabled. All subsequent flashes are active ABS fault codes.
4. The ATC system will be enabled when the ignition is switched off then back to on.

ATC System:

The ATC system improves traction on slippery or unstable road surfaces by limiting excessive drive wheel slip. This is accomplished two ways, limiting engine torque to the drive wheel or engaging a brake to the spinning drive wheel. During normal operation engine torque is unaffected. The ATC system works in conjunction with the ABS Electronic Control Unit. The ECU monitors tone ring speed of the drive wheel in relation to the other wheels. If a speed differential occurs in the drive wheel, the ECU enters Automatic Traction Control mode.

During an ATC event, the ECU will automatically react to optimize traction and safety if the motorhome encounters a slippery road surface. Engine torque is normally reduced to limit drive wheel slip.

NOTE:
The ATC system is always active.

ATC reacts to drive wheel slip by:

- Reducing engine torque to the drive wheel if road speed is above 25 mph.
- Reducing engine torque and activating drive axle brake controls if road speed is below 25 mph. If the brake control activates, it remains active regardless of road speed.

How Automatic Traction Control (ATC) Works

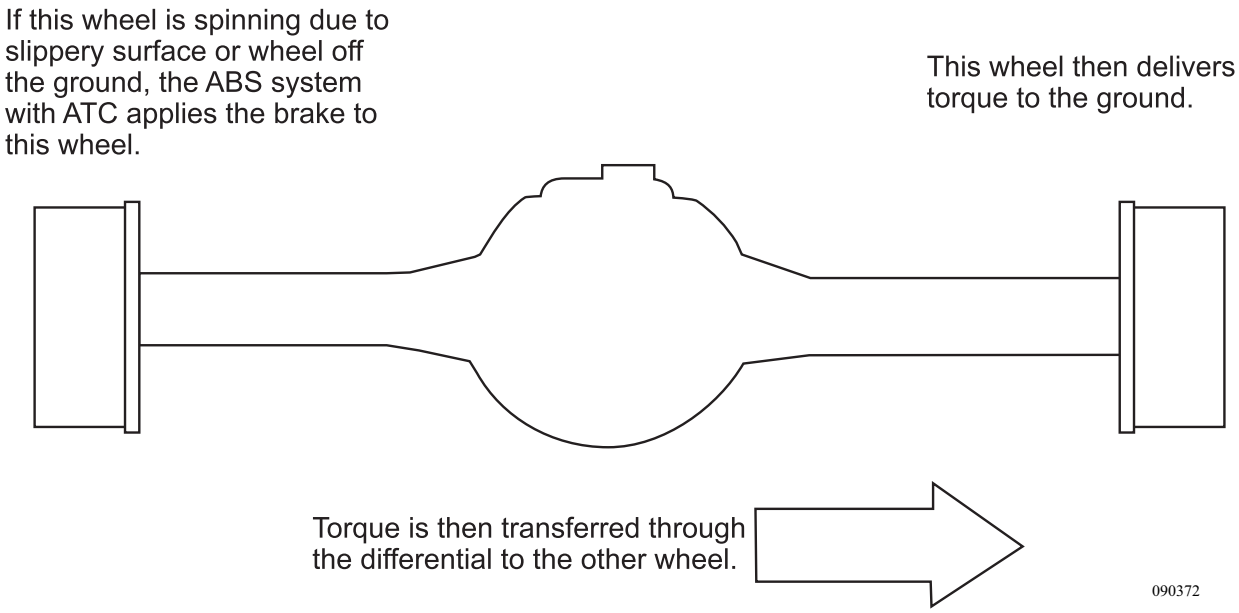

ATC Switch:

Activating the ATC switch reduces ECU control over engine torque. Momentarily pressing the ATC switch allows the ECU to increase the amount of engine torque applied to the drive wheel in an ATC event. The amount of engine torque applied to the drive wheel will vary with the amount of drive wheel slip versus road speed. In an ATC event, the ECU remains active regardless of road speed or switch position. The indicator light flashes slowly when the ATC switch is activated.

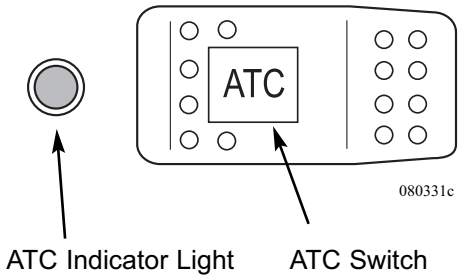

ATC Indicator Light:

During normal operation, the ATC indicator light will illuminate steady when the ignition key is turned ON. The light remains illuminated until the first brake application. If an ATC event occurs, the indicator light will flash quickly. The indicator light will flash slowly if the ATC switch is activated.

CAUTION:
Normally the switch should remain inactive. During an ATC event (drive wheel slip) the ECU will automatically optimize drive wheel traction in most situations. Activating the switch during periods of wheel slip can increase torque to the spinning drive wheel. Drive train damage can occur if the spinning drive wheel should suddenly regain traction. If the motorhome is stuck it is advised to call a professional towing company to limit the possibility of body and drive train damage.

FRONT AXLE

While driving the motorhome, be aware of any changes in the feel of steering and have the system checked when noting apparent differences. It is normal to hear some hydraulic noise from the steering, especially when the steering is at maximum, or while turning the wheel when the motorhome is parked. Investigate any unusual or loud noises that occur. Begin by checking the level of the hydraulic fluid. Traveling at slow speeds over rough surfaces may cause a "clunking" noise to emanate from the steering column, but if noise is heard on smooth surfaces while sharply turning back and forth, the noise should be inspected and repaired as necessary.

Shimmy and looseness should be checked and corrected as soon as possible. If looseness is felt in the steering, the steering linkages can be observed while someone turns the steering wheel left and right. Watch the linkages for evident play or uneven interaction between components to help pinpoint a problem. Wheel bearings should be cleaned and repacked with high temperature disc brake grease every 30,000 miles. Have the steering system checked for damage after a severe impact, such as striking large potholes or curbs, and front-end collisions. Observe the alignment of the steering wheel; a change in the alignment may indicate damage to the steering components or suspension.

Maintenance for the system entails adequate lubrication. Use only a hand operated grease gun on the fittings. Grease fittings for the steering system are found on the both ends of the drag link (the bar connecting the steering gear to the axle), and on the intermediate steering shaft located between the steering wheel and steering gear. The correct wheel alignment promotes longer tire wear and ease of handling while minimizing the strain on the steering system and the axle components. Use NLGI #2 Lithium soap base lubricant for all steering linkage and brake components.

Alignment

Camber:

Camber, as shown, is vertical tilt of wheel as viewed from the front of the motorhome. This is machined into the axle when manufactured and is not adjustable.

- "**Positive**" camber is an outward tilt of the wheel at the top.
- "**Negative**" camber is an inward tilt of the wheel at the top.

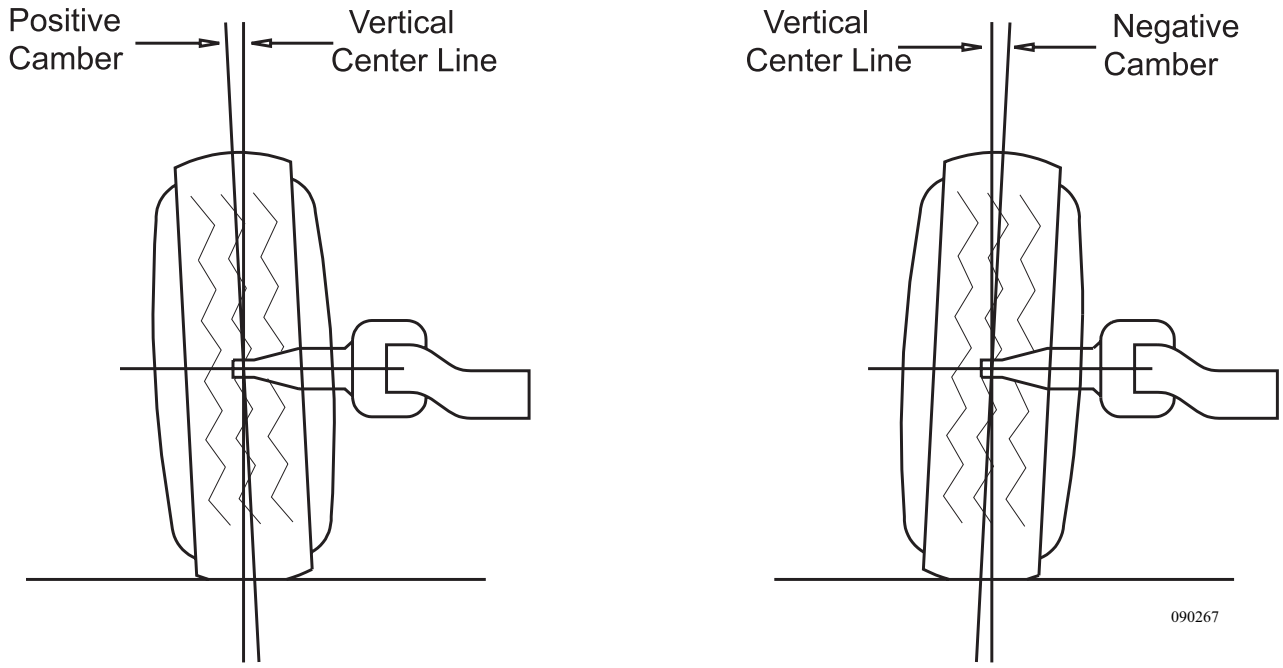

Toe Setting:

The toe setting represents different distances between the front and rear of the tires (measured at the vertical center line of the tires).

Toe-in:

Occurs when the tire front distance is less than the tire rear distance.

Toe-out:

Occurs when the tire front distance is greater than the tire rear distance.

Wheels are generally set with initial toe-in. As the motorhome operates tires tend toward a toe-out condition. By starting with an initial toe-in setting, a desirable “near zero toe-in” can be achieved when the motorhome is in motion.

Incorrect toe settings, where toed-in or toed-out, can have a significant affect on tire wear. The toe setting is adjusted by lengthening or shortening the cross tube.

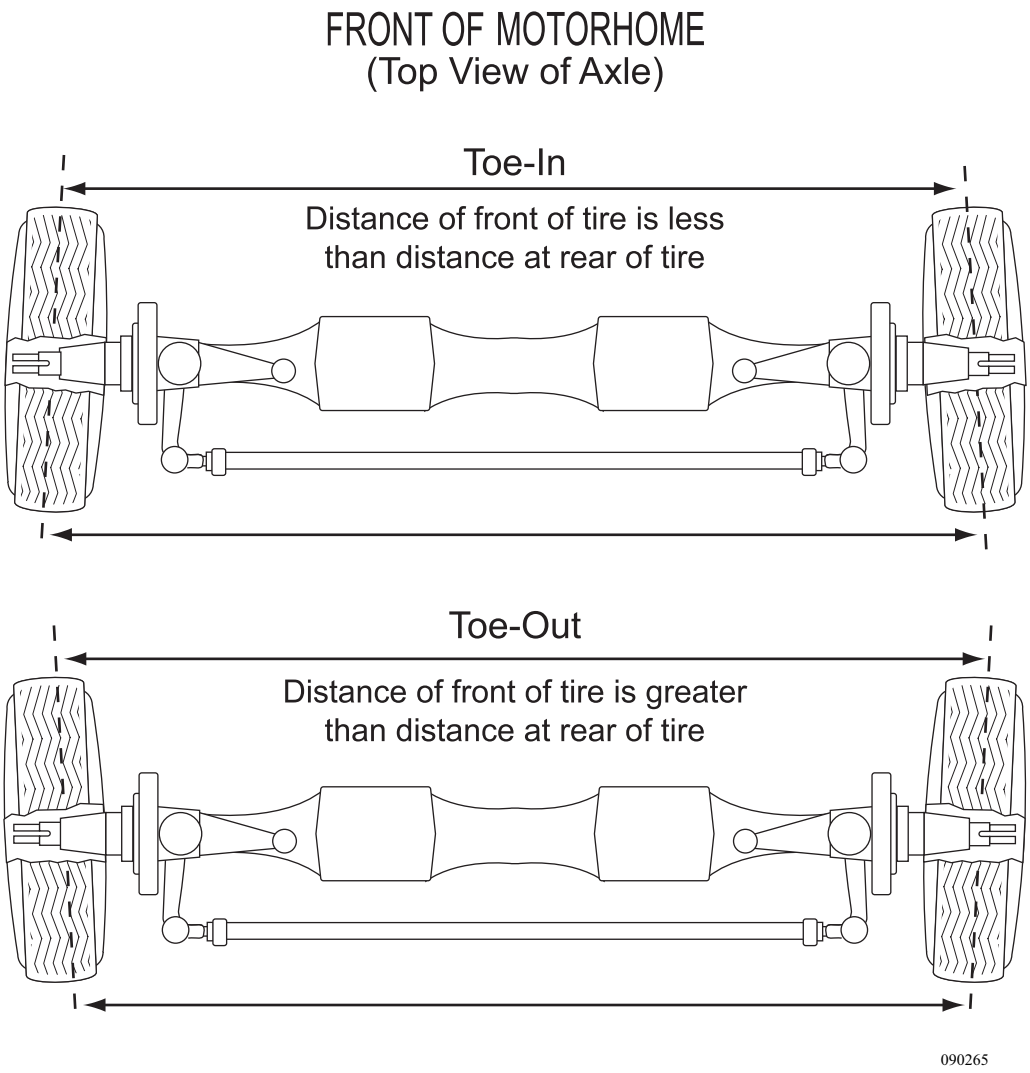

Caster Adjustments:

Caster is the fore and aft tilt (toward the front or rear of the motorhome) of the steering kingpin as viewed from the side of the motorhome.

"**Positive**" caster is the tilt of the top end of the kingpin toward the rear of the motorhome.

"**Negative**" caster is the tilt of the top end of the kingpin toward the front of the motorhome.

Setting the caster angle more positive than specified may result in excess steering effort and/or shimmy. Decreasing the angle may result in the motorhome wandering or poor steering return to center. The caster angle is determined by the installed position of the steer axle.

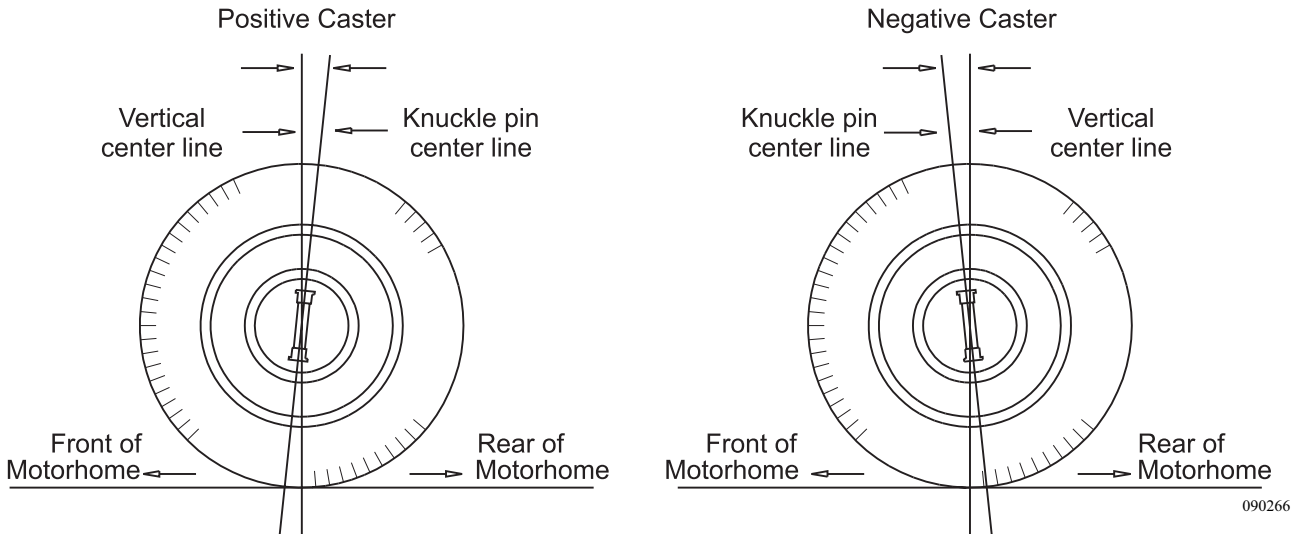

Left Front

	Min.	Nominal	Max.
Camber	-0.15º	-0.35º	-0.65º
Caster	3.50º	4.50º	5.50º
Toe	0.018º	0.03º	0.042º

Right Front

	Min.	Nominal	Max.
Camber	-0.15º	-0.35º	-0.65º
Caster	3.50º	4.50º	5.50º
Toe	0.018º	0.03º	0.042º

alignment spec chart.eps

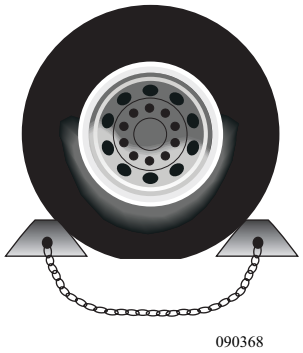

Lubrication Maintenance Safety

The front axle components require periodic lubrication maintenance. Chock wheels for safety prior to accessing components underneath the motorhome.

Steering Components

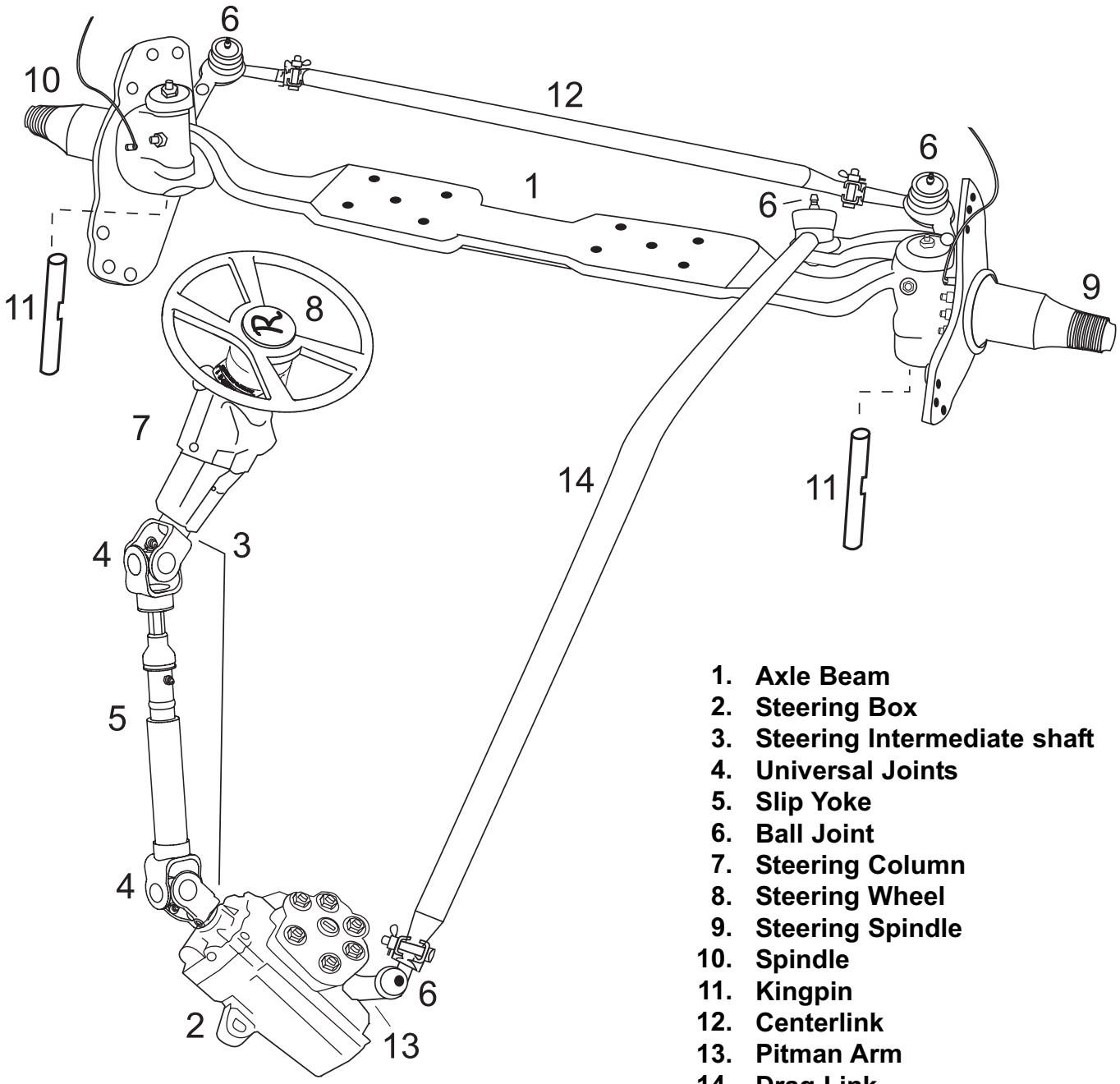

1. **Axle Beam**
2. **Steering Box**
3. **Steering Intermediate shaft**
4. **Universal Joints**
5. **Slip Yoke**
6. **Ball Joint**
7. **Steering Column**
8. **Steering Wheel**
9. **Steering Spindle**
10. **Spindle**
11. **Kingpin**
12. **Centerlink**
13. **Pitman Arm**
14. **Drag Link**

TYPICAL STEERING COMPONENTS

The intermediate steering shaft connects the steering wheel to the steering box. Service the intermediate steering shaft universal joints and slip yoke every 30,000 miles or annually. Remove the steering column cover to access the upper universal joint and slip yoke lubrication points. The lower universal joint is accessed from underneath in the generator compartment behind the front electrical box.

Greasing the Intermediate Steering Shaft Universal Joints:

1. Check the shaft for looseness. Repair if loose or worn.

2. Apply the specified grease at the grease fitting on the universal joint. Apply until the new grease purges from all the seals.

3. If the new grease does not purge from the seals, disassemble and clean the joint or replace the universal joint. Do not lose the needle bearings.

Greasing the Intermediate Steering Shaft Slip Yoke and Splines:

1. Check the shaft for looseness. Repair if loose or worn.

2. With finger, cover the rear air hole so grease flows to the front seal. Apply the specified grease at the grease fitting on the slip yoke. Apply until new grease purges and forces finger away from the air hole in the end of the slip yoke. Greasing interval is yearly or every 30,000 miles.

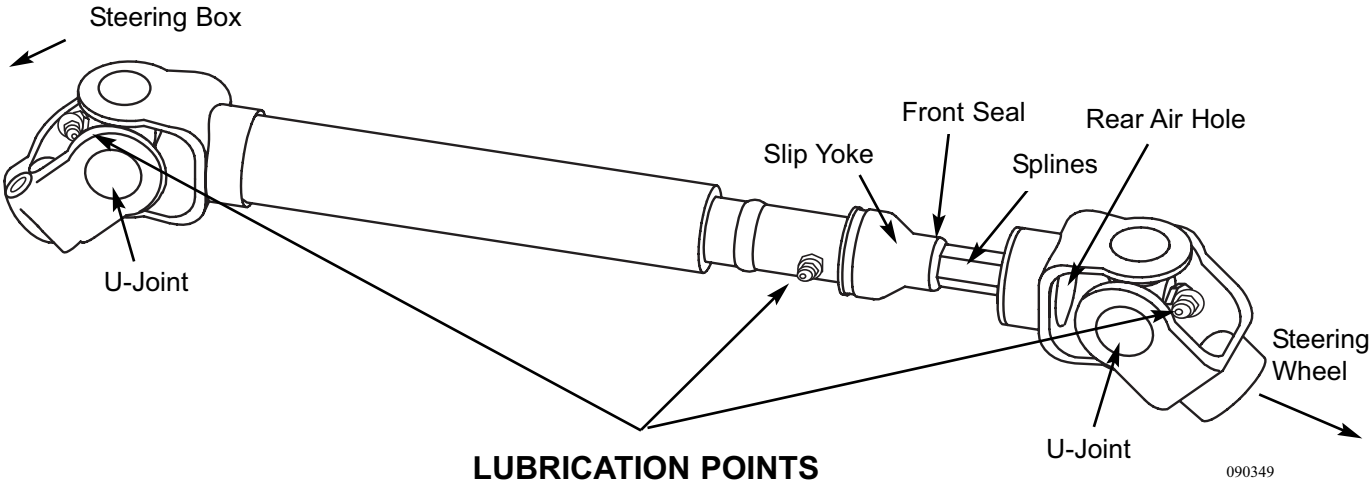

LUBRICATION POINTS

Intermediate Steering Shaft

Drag Link

The drag link connects the steering box pitman arm to the steer axle. The movable joint (ball joint) uses sealed boots to prevent water intrusion. Do not rupture the boot when applying grease. Grease interval is six months or every 5,000 miles.

<u>NOTE:</u>
It will be necessary to start the motorhome and turn the steering wheel to access fitting(s).

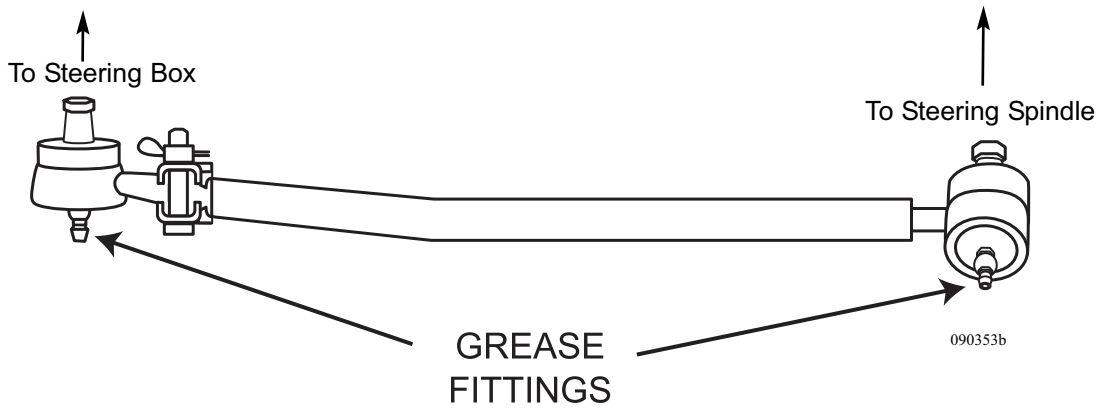

Center Link

The center link is located on the backside of the steer axle. The center link attaches the two wheels together causing the right front to track with the left front. Greasing interval is every six months or 5,000 miles.

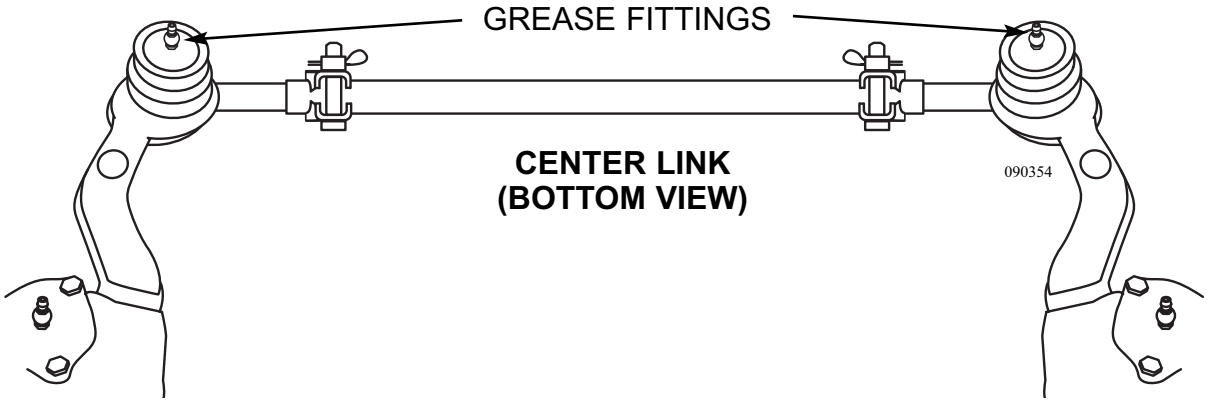

Steering Spindles

The steering spindles attach to the front axle and pivot on the kingpin. The wheel end assembly and brake system attach to the spindle. There are upper and lower lubrication points for the kingpin. The drag link attaches to the roadside spindle. After initially lubricating the roadside and curbside kingpins, rotate the steering assembly lock to lock (full left to right) then move assembly back to center. This purges any remaining air pockets. Continue lubricating the kingpins until new grease purges with no air pockets. Greasing interval is every six months or 5,000 miles.

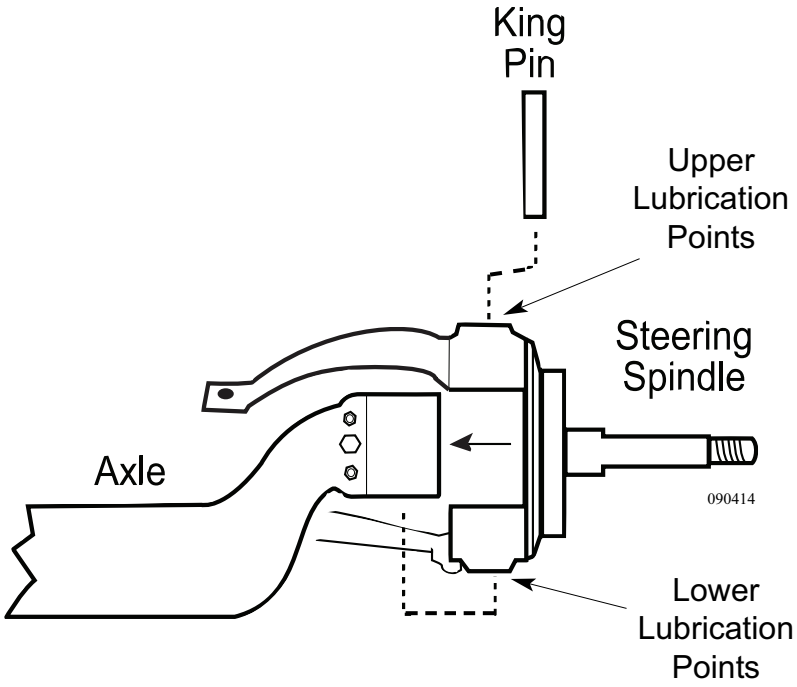

Control Arm Bushings

Control arms align the axles perpendicular with the frame. The panhard bar controls side to side motion of the axles in the frame. Control arm bushings and panhard bar bushings do not require lubrication.

STEERING GEAR

Maintain the grease pack behind the output shaft's dirt and water seal as a general maintenance procedure at least twice a year. The grease fitting is provided in the housing trunnion. Use NLGI grade 2 or 3 multipurpose chassis lube and use only a hand operated grease gun on the fitting. Add grease until it begins to extrude past the sector shaft dirt and water seal.

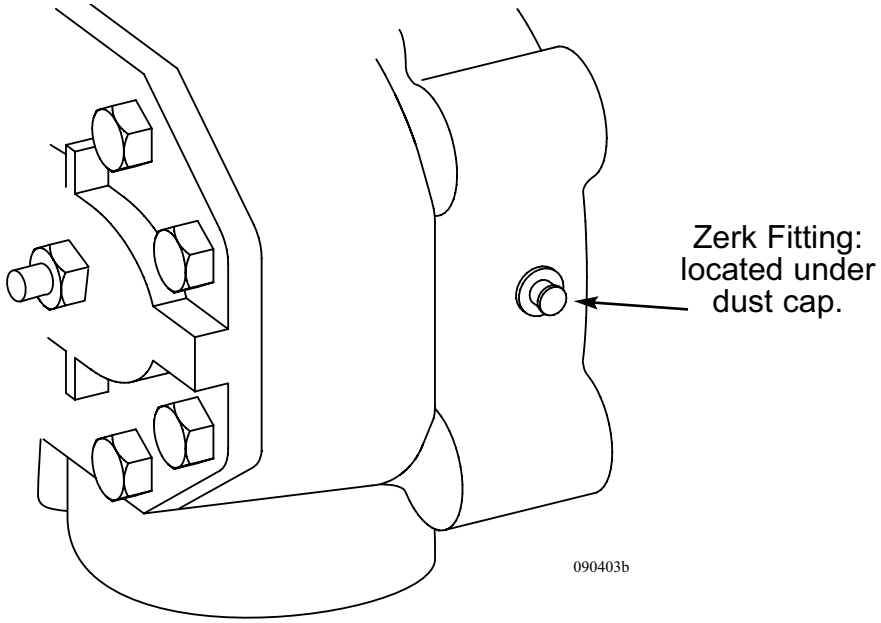

Back of Steering Box

Power steering is provided by using hydraulic pressure to assist rotating the output shaft of the steering gear. Located at the end of the input shaft of the steering gear is poppet valve and worm drive. The poppet valve directs the hydraulic fluid pressure to a type of spool. The worm drive threads in the center of the spool. When in the center position, pressurized hydraulic fluid bypasses the spool. When a turn is made, the poppet valve shifts to one direction or the other, directing the hydraulic pressure to one side of the spool depending on turning direction. The hydraulic fluid is then cooled before returning to the reservoir.

Inspect for signs of leakage when performing fluid level checks.

Changing the hydraulic filter in the engine compartment at regular intervals will help ensure trouble-free operation.

Drive Axle:

The chassis drive axle is a single reduction axle, with a gear ratio of 4.30:1. The differential gears consist of a hypoid pinion and ring gear set and bevel differential gears. The differential carrier can be removed from the axle housing as a unit in order to perform repairs.

All power from the engine to the rear tires is transferred through the rear axle. For this reason, it is important that maintenance be performed on the axle as required to avoid premature wear of the gears and bearings in the axle.

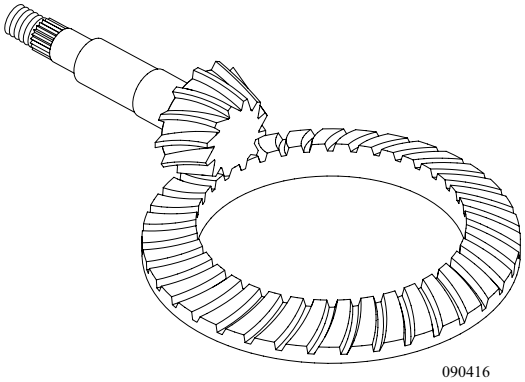

Ring and Pinion Gears

Drive Axle Lubricant:

The rear axle is filled with synthetic gear oil meeting MIL-L-2105D specifications. Change interval is every 250,000 miles, or 36 months, whichever occurs first.

During lubricant change, fine metal particles will be observed clinging to the magnetic fill and drain plugs of the axle. These particles are normal wear particles from the axle components, but will cause faster than normal wear of the axle components if allowed to circulate through the lubricant. It is recommended that the magnetic plugs be tested, if not replaced, at each lubricant change when petroleum-based lubricants are used, or every 100,000 miles when synthetic lubricant is used. These plugs should have sufficient magnetic strength to pick up a 1.5 pound weight of low carbon steel. Never replace a magnetic plug with a non-magnetic "pipe plug" as they will not keep the lubricant clear of metal particles or seal properly.

The level of lubricant in the rear axle should be checked every 30,000 miles or annually, whichever comes first. This will ensure adequate lubricant in the axle for proper operation.

Proper Drive Axle Lubricant Level:

Regular inspection of the drive axle lube levels is an essential maintenance procedure.

- With the motorhome parked on a level surface and rear axle warm, place a large container under axle.
- Clean the area around the fill plug, which is located approximately halfway up the axle housing bowl.
- Remove the fill plug and observe the lubricant level.
- The lubricant should be level with bottom of the hole.
- Important: The lube level close enough to the hole to be seen or touched is not sufficient. The lube must be level with the hole.
- Correct the level as necessary.
- Re-install the fill plug and tighten to 35 to 50 ft. lbs.

To Drain and Replace Lubricant:

1. Place a large container under the axle.
2. Remove drain plug and allow axle to completely drain.
3. Properly dispose of oil.
4. Clean the drain plug and test (replace the drain plug if needed).
5. Install and tighten drain plug to 35 to 50 ft. lbs.
6. Clean the area around the fill plug from the axle-housing bowl.
7. Fill the axle with approved lubricant until the level is even with the bottom of the fill plug hole.

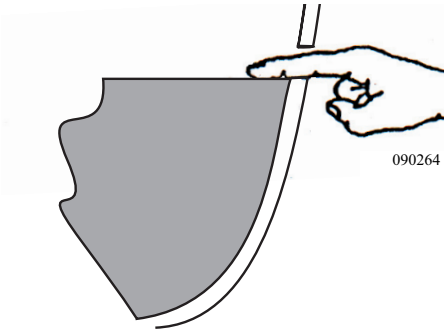

Correct Oil Level

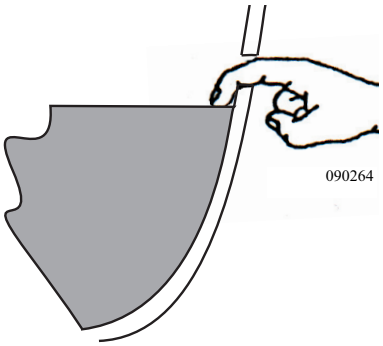

Incorrect Oil Level

WARNING:
When checking or changing the lubricant, always ensure that the axle is not "hot." Oil temperature 90º F or hotter can easily cause severe burns.

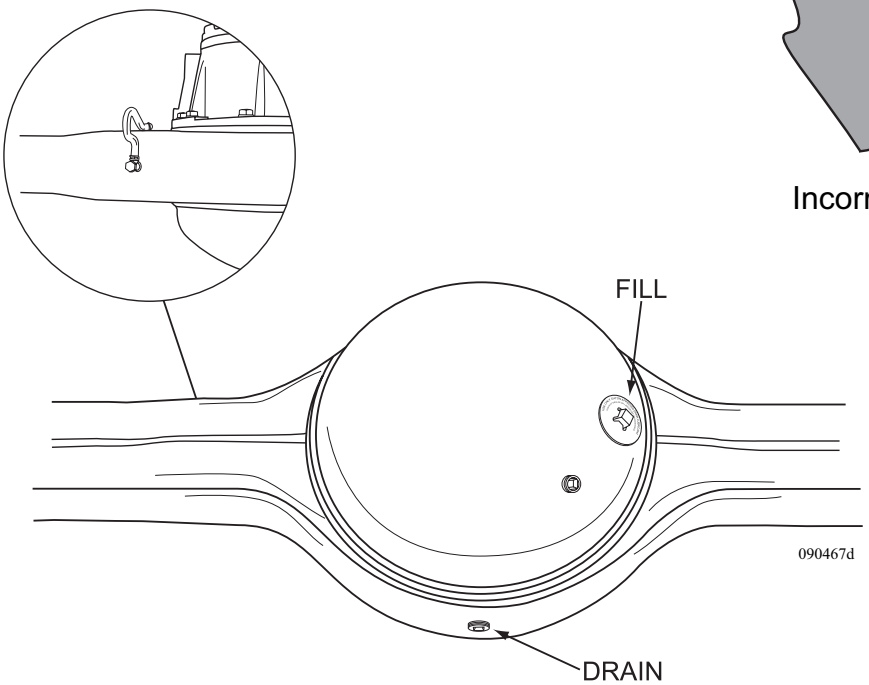

NOTE:
When checking the lube level also check the housing breathers on top of axle housing. Clean the breathers if dirty or replace them if damaged.

Drive Shaft:

The drive shaft transfers the power produced by the engine to the drive axle. A worn or out of balance drive shaft causes chassis vibration that generally increases in intensity with road speed.

NOTE:
It will be necessary to move the motorhome forward or backward to access all fittings on the drive shaft.

Greasing the Drive Shaft Universal Joints:

1. Check the drive shaft for looseness. Repair if loose or worn.

2. Apply the specified grease at the grease fitting on the universal joint. Apply until new grease purges from all the seals.

3. If new grease does not purge at the seals, loosen the bearing cap bolts and re-grease until all four caps purge. If new grease still does not purge, disassemble and clean or replace the universal joint.

Greasing the Drive Shaft Slip Yoke and Splines:

1. Check the drive shaft for looseness. Repair if loose or worn.

2. With finger, cover the rear air hole so grease flows to the front seal. Apply the specified grease at the grease fitting on the slip yoke. Apply until new grease purges and forces finger away from the air hole in the end of the slip yoke. Greasing interval is 10,000 miles or annually.

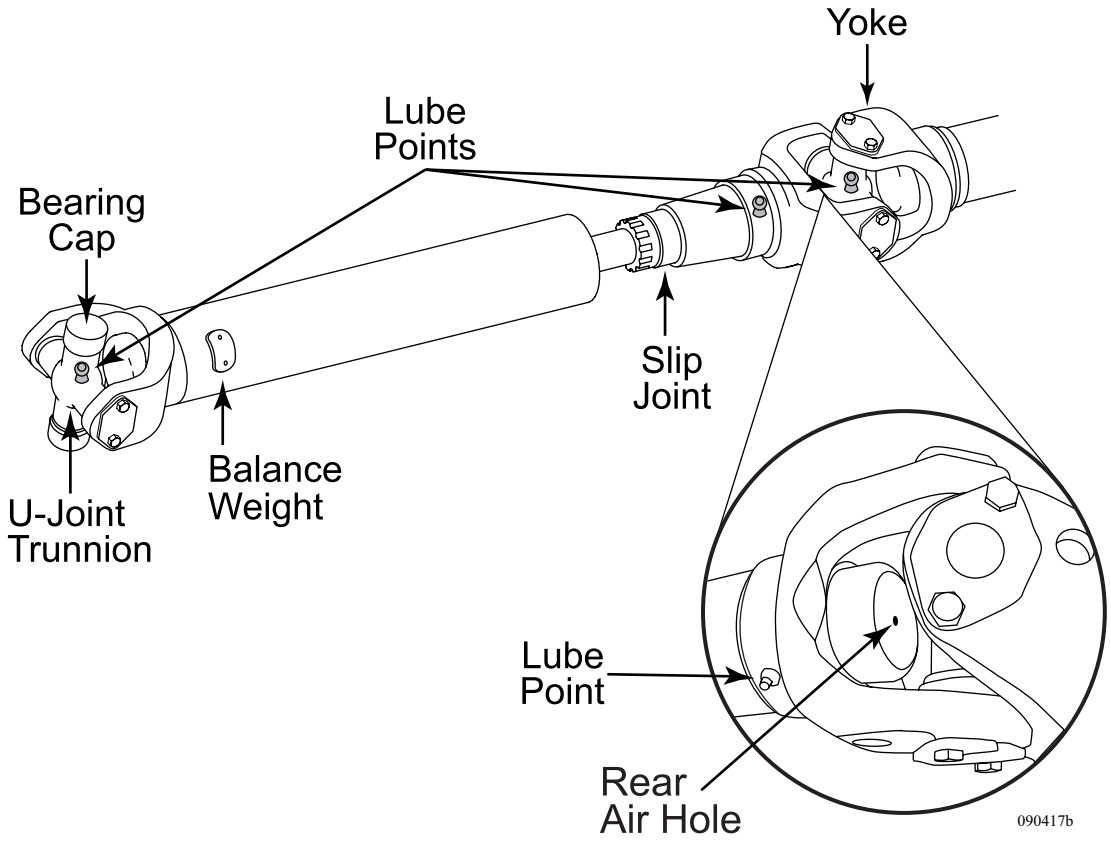

090341

<u>WARNING:</u>
Rotating shafts can be dangerous. Rotating shafts can snag clothes, skin, hair, hands, etc. causing serious injury or death. Do not work on or near a shaft "with or without a guard" when the engine is running.

U-Joint Angles, Phasing & Drive Shaft Balance

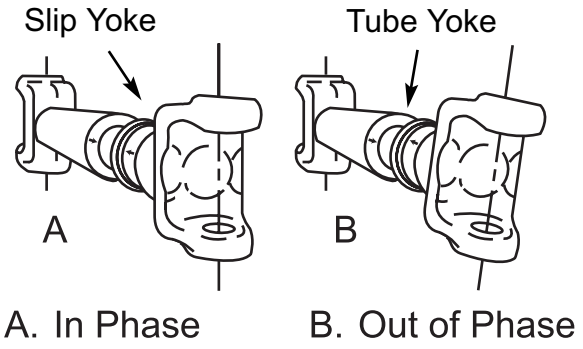

Correct U-joint working angles, U-joint phasing, and drive shaft balance is vital to maintaining a quiet running drivetrain and long life of drivetrain components (including drive shaft components).

When in phase, the slip yoke lugs (ears) and tube yoke lugs (ears) are in line. Normally this is the ideal condition and gives the smoothest running shaft. There may be an alignment arrow stamped on the slip yoke and on the tube shaft to assure proper phasing when assembling these components. If there are no alignment marks, they should be added before disassembly of the shaft to assure proper reassembly.

Phasing is relatively simple on a two-joint set, be sure that the slip yoke lugs and the tube yoke lugs are in line.

The U-Joint working angle is the angle formed by the intersection of the drive shaft centerline and the extended centerline of the shaft of any component to which the U-joint connects. Because the double oscillating motion of a U-joint that connects angled shafts causes a fluctuating speed difference between the shafts, the effect created by the U-joint at one end of the shaft must cancel the effect created by the U-joint at the other end. This is done by making U-joint working angles at both ends of the drive shaft approximately equal, with the U-joints in phase. If the yoke lugs at both ends of the shaft are lying in the same plane (a plane which bi-sects the shaft lengthwise), the U-joints will be in phase.

Any condition which allows excessive movement of a drive shaft will cause imbalance: loose end yoke nuts, loose U-joint bearing cap retaining capscrews, worn U-joint trunnions, bearings and worn slip-joint splines.

Among the most common causes of U-joint and slip joint damage is lack of lubrication. To keep the motorhome operating smoothly and economically, the drive shaft must be carefully checked and lubricated at regular intervals.

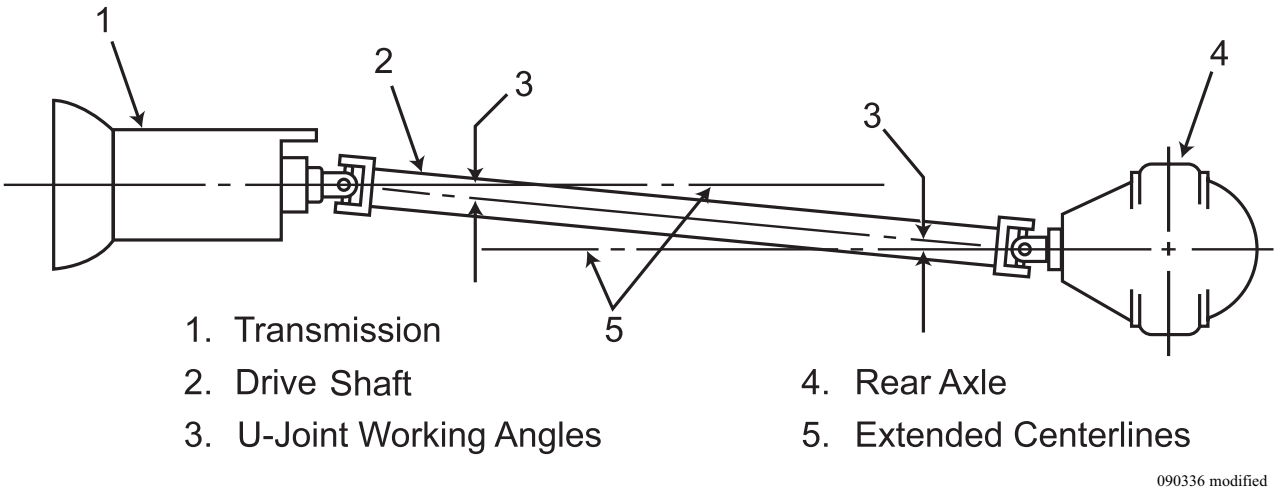

The switch for the tag axle is located on the roadside switch panel. Two lights are located on the switch: The tag axle icon will illuminate with the park lights. The lower bar light will illuminate when the tag axle switch is on and the transmission is in neutral, reverse or first gear. When the transmission is in second thru sixth gear and the tag axle is lowered, the light will be off. Raise the tag axle when performing severe or tight maneuvering under 5 mph to prevent scuffing the tag axle tires. A beeping alarm sounds when the switch is on.

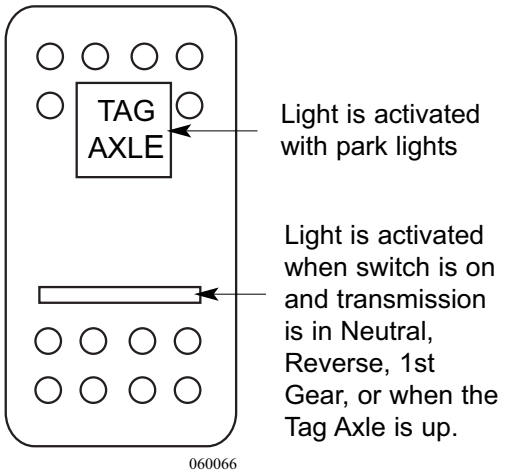

The tag axle raises in the following modes:

- Interior house power must be ON.
- When the switch is on and the transmission is in Neutral, Reverse or First Gear.
- With the tag axle in the up position there is not a specific height requirement other than the tire should be off the ground. If extra clearance is desired, moving the lift chain up one link on each side can increase ground clearance with the tag axle in the raised position.

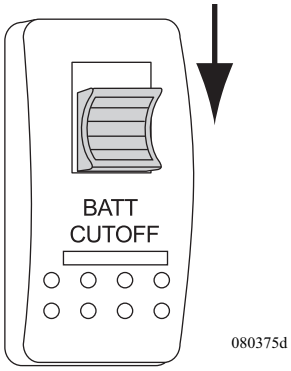

Air leveling Process with Tag Axle Switch ON:

- The tag axle switch supplies 12 Volt DC to the 14 gauge yellow with green stripe wire to the air valve located at the roadside rear.
- The rear air valve applies air pressure to the orange air line at both tag axle lift chambers to raise the axle.
- Air pressure in the tag axle air bags is released. The tag axle remains up in reverse, neutral, first gear or until the switch is turned off.

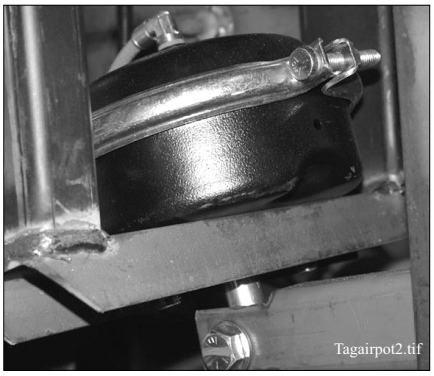

Tag Axle Lift Chamber (Type 30)

Adjusting the tag axle load:

Changing the amount of weight carried by the tag axle affects weight distribution between the tag, drive and steering axles. The amount of down force applied to the tag axle is controlled by the amount of air pressure in the tag axle air bags. An adjustable pressure regulator located in the engine compartment sets the amount of air pressure in the tag axle air bags. Regulator pressure is preset at the factory and may require adjustment to obtain the proper weight distribution on all axles. To determine the correct setting of the pressure regulator the motorhome will need weighed after it has been loaded for travel.

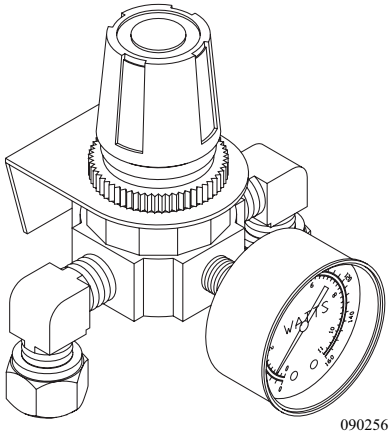

Tag Axle Pressure Regulator

NOTE:
The tag axle pressure regulator valve is located in the engine compartment on the roadside.

Tag Axle Lubrication:

All tag axles use oil to lubricate the wheel bearings. The oil is drained and refilled without removing the wheel end assembly. Remove the hubcap to access the bearing cover and drain plug.

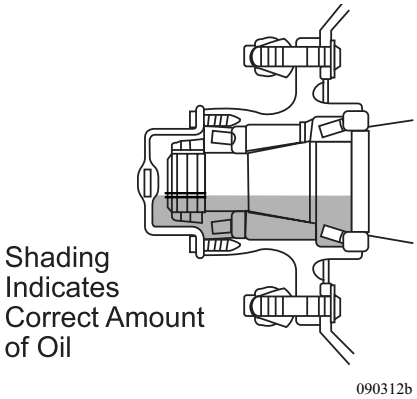

INSPECTION:
Inspect the oil level before every trip or every 5,000 miles. The motorhome should remain motionless for at least 30 minutes in order to stabilize the oil level before inspecting.

To inspect the oil level:

- The motorhome must remain stationary for 30 minutes.
- Remove the chrome hubcap.
- Locate the full and add mark on the outside of the clear plastic cover.
- If the lubricant is low, add recommended fluid to proper level.

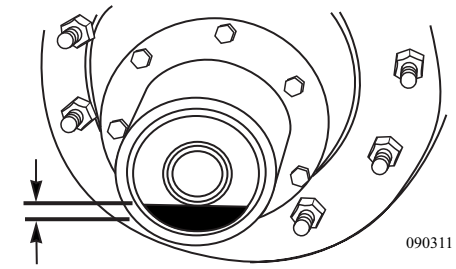

BELOW 0.25" - ADD OIL

Oil Change Intervals

The recommended oil change interval is based on operating conditions, speeds and loads. Limited service applications may allow the recommended interval to be increased. Severe applications may require the recommended interval to be reduced. For more information, contact a Dana/Eaton service representative.

Recommended Interval Change:

- Change the fluid whenever the seals are replaced, the brakes are relined or at 30,000 miles (48,000km). However, check the lubricant twice a year (spring and fall) for contamination. Change as needed.
- If yearly mileage is less than 30,000 miles, change the fluid twice a year (spring and fall).

Lubricant Type:

- Shell Hypoid gear oil, GL-5, S.A.E. 80w/90. Specifications, minimum ambient temperature - 15º F (-26.1º C). There is no maximum ambient temperature. Lubricant temperature must never exceed 250º F (+121º C).

To Drain:

- Place a suitable container below the bearing cover and remove the drain plug. If the cover does not have a drain plug, remove the screws retaining the cover plate to drain the lubricant.
- Replace plug or cover plate and fill bearing assembly with the recommended lubricant.

Lubrication Maintenance

The tag axle slack adjuster and “S” cam shaft need to be lubed periodically to ensure proper brake operation. Lubricate every 10,000 miles or 3 months.

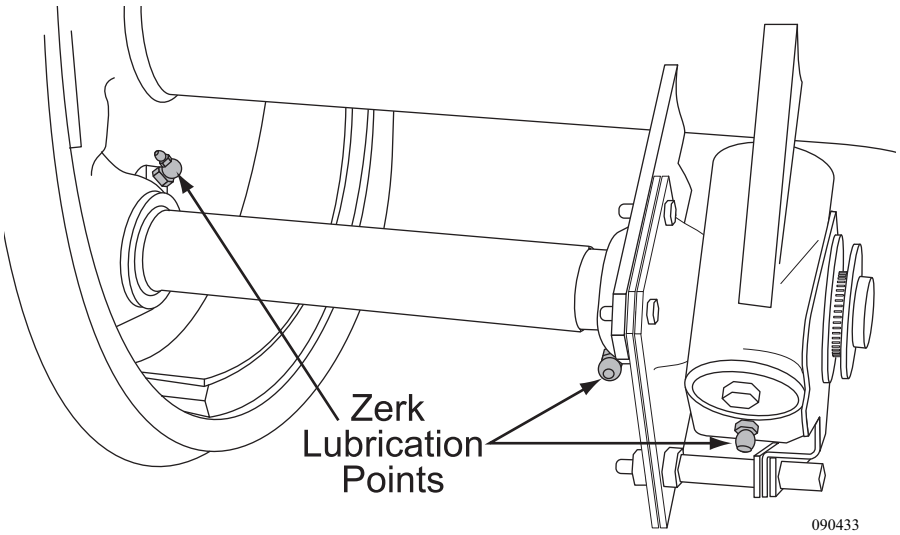

SHOCK ABSORBER

The shock absorber by definition is a hydraulic device used to dampen suspension/ body movement. Road surface irregularities are compensated for by the shock absorber. The roadmaster chassis incorporates the "Bilstein" shock in the design of the exclusive air glide suspension system. This shock absorber is a telescopic, mono tube unit filled with nitrogen gas and hydraulic oil. The result of the mixture is uninterrupted damping for the smallest of wheel deflection.

By design, a self lubricating seal is used which will allow approximately 10% of the total oil capacity to pass onto the piston rod. The gradual process of oil loss does not affect the performance of the shock absorber during the service life. This process will be evident after a long period of service by an oil film on the body of the shock absorber. The appearance of a coating or film on the body or rod is completely normal, it is an indication the shock is functioning normally.

Road holding, handling, balance and braking characteristics all can be contributed to the shock absorber. The operating conditions for which the shock absorber must endure will determine the life span. However, since the only moving part is the piston rod, there are no springs, hinges or pins to wear out, get weak or deteriorate.

LEVELING - AIR

A touch panel, computer controlled air leveling system uses the air springs to level the motorhome. The system can be set to level the motorhome automatically or the system can be operated manually.

<u>CAUTION:</u>
The ignition must be ON and the system set to travel mode for the air suspension to operate. This is critical to note in the event the motorhome requires emergency towing.

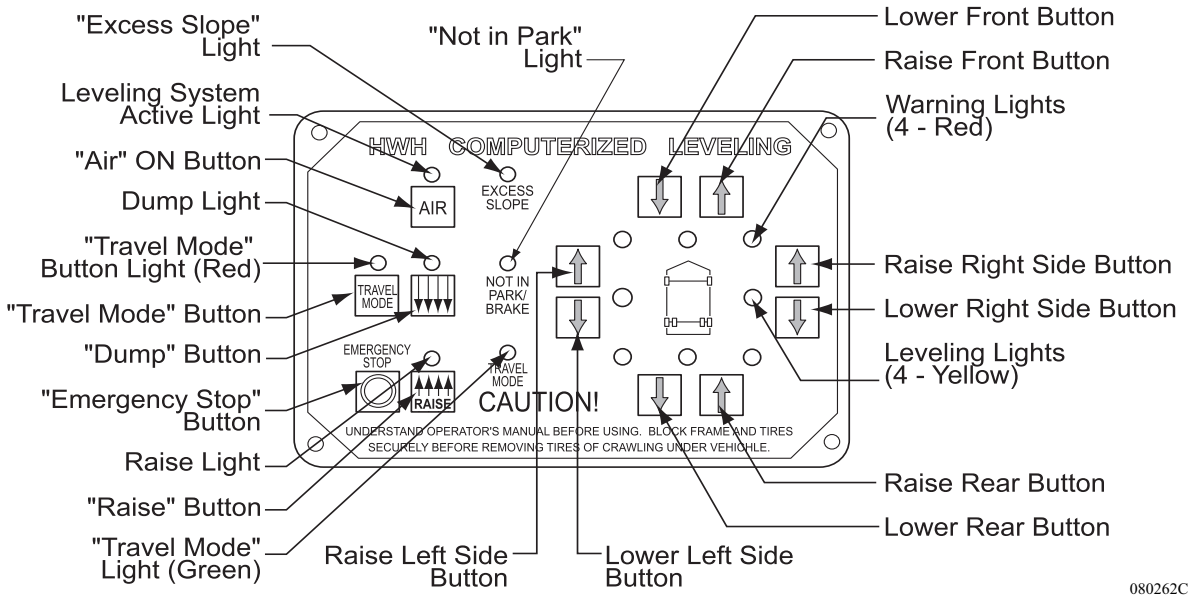

Control Panel Buttons:

Air = Park brake must be applied to enable this function. The ignition must be in the ON position. Press once to set system in Manual Level mode or press twice to begin Auto-Level mode.

Travel Mode = Places the system in Travel mode and turns OFF the Master Warning lamp. Air system pressure must be at least 80 psi.

Dump = Press this button with ignition ON or in the accessory position to deflate the air springs. System pressure is unaffected.

Emergency Stop = Turns the control panel off except when the ignition is in the **on** position and the park brake is released.

Raise = Press this button with the ignition ON or in the accessory position to inflate the air springs using system air pressure.

Not in Park Brake = Illuminates when the park brake is not engaged and the AIR button is pressed.

Up arrows = Used for manual leveling. Press and hold an UP arrow to raise the corresponding side.

Down arrows = Used for manual leveling. Press and hold a DOWN arrow to lower the corresponding side.

Excess Slope = Indicates the system has attempted to level the motorhome, but the surface is too steep.

Panel Indicator Lamps:

Yellow Level Indicator Lamps = Illuminated lamp indicates that side, end or corner of the motorhome is low. When yellow level lights are extinguished, the motorhome is level.

Red Warning Indicator Lamps = Illuminate when system is set to Manual or Automatic Level to indicate that the Height Control Valves (HCV) are inoperable.

Master Warning Lamp:

The Master Warning Lamp may illuminate for several reasons with the ignition in the ON or OFF position.

- When system pressure is below 80 psi.
- When any air bag pressure is below 20 psi.
- When the ignition is on and the system is not in the travel mode.
- When manual or automatic leveling mode is activated.
- When the tag axle (if equipped) is raised. The system will not allow manual or automatic leveling when the tag axle is raised.
- If the reset button is illuminated.
- If the lamp remains lit, check the above items. In some cases, it may be necessary to set the system to back to travel mode by pressing the Travel Mode button or releasing the park brake.

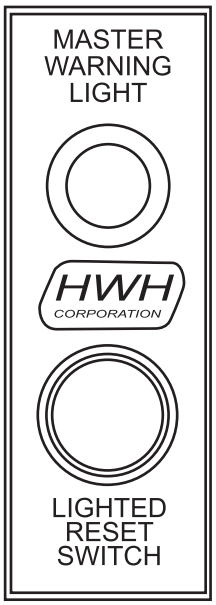

090454

Warning Lamp & Reset Panel located in Roadside Electrical bay.

Reset Button:

Should the reset button illuminate, an error may have occurred in the system. Press the button to reset the system and to turn the panel off. Accidentally pressing the reset button in some modes can cause the Master Warning lamp or Reset Button to illuminate. Press the Emergency Stop button and set the system to Travel Mode. If the lamp remains illuminated, check the system for a blown fuse in the control center. If the lamp remains lit after confirming that the fuses are properly functioning, have the system diagnosed by a qualified technician.

CAUTION:
When the reset light is illuminated, the motorhome will return to ride height if the ignition is in the on position.

Automatic Air Leveling

When set to Auto-Level mode, the system will attempt to level to the lowest point first. Example: if the rear of the motorhome is low, the yellow level indicator located at the rear of the motorhome icon will illuminate.

The system will dump air from the front air springs until the motorhome is level. If the front air springs fully deflate before the yellow lamp goes out (indicating level), the system will raise the rear of the motorhome until the yellow lamp goes out. If two yellow indicator lamps are illuminated, one on the side and one on the end, the system will level side-to-side first, then end-to-end.

NOTE:
The leveling system will perform best if there is no movement in the motorhome while the system is attempting to auto-level.

CAUTION:
Several inches of unobstructed downward travel is required when using the leveling system. Look underneath the motorhome for any obstacles that could damage undercarriage components before using the leveling system. Do not move the motorhome when manual or automatic leveling mode is set. Suspension and body damage may result.

WARNING:
Never engage the leveling system when anybody is located near or underneath the motorhome. Serious injury or death can occur.

Automatic Air Leveling Procedure:

- Set the parking brake and start the engine. The ignition must be ON to operate the leveling system. Ensure the front wheels are pointing straight ahead. Allow the air system to build to full air pressure, approximately 130 psi. The leveling system operates more efficiently using the high-idle feature.
- Press the AIR button once to turn the leveling system on. The Air indicator light and four red warning lights will glow steady.
- Press the AIR button a second time. The Air indicator light will start flashing and automatic leveling will begin. The system will level only when a yellow side or end light illuminates.
- When all yellow lights are out, the leveling process is complete. The air indicator light will flicker. The engine may now be turned off.

The air indicator light will initially flicker for about ten minutes. After ten minutes, the Air indicator light will go out. The system is in "sleep" mode. The system will awaken at approximately 30 minute intervals to check the level sensing inputs. If the system detects a continuous off-level condition from a sensing input for one minute, the system will try to lower the opposite end/side in an attempt to level the motorhome. If the end/side is at its lowest point of travel, the system compressor will activate to inflate the air spring at the low end/corner and level the motorhome. This process will continue until Emergency Stop is pressed or the parking brake is released with the ignition in the ON position.

NOTE:
If the system is turned off, the processor will not make any adjustments and an off level condition may occur over time.

Excess Slope:

If the system was unable to level motorhome after approximately 15 to 18 minutes, one or two **yellow** Level indicator lights will remain on and the Excess Slope light will illuminate. The system will remain on, but will not go into Sleep Mode. It is recommended to select another site.

Preparation for Travel:

- Follow the procedures listed for "Retracting the Slide-out Rooms" in Section 5.
- Start the engine and allow the air system to fully pressurize (approximately 130 psi).
- Press the Travel Mode button or release the parking brake. The leveling system will automatically disengage. Before travel, the Master Waning lamp must be off and the Travel indicator light must be on. After the leveling system is set to travel mode, it takes about one minute for the suspension system to have sufficient air for travel. DO **NOT** solely rely upon the warning lights to indicate that motorhome suspension is ready for travel.

System Air Compressor:

Should air pressure in the leveling system drop below approximately 90 psi when in Auto-Level mode, a small air compressor provides the leveling system with air pressure. This compressor requires no maintenance.

Manual Air Leveling

Manual Air Leveling Operation:

- Set the parking brake and start the engine. Ensure the front wheels are pointing straight ahead. Allow the air system to build to full air pressure, approximately 130 psi. The leveling system operates more efficiently using the high-idle feature.
- Press the AIR button once to turn the leveling system on. The Air indicator light and four red warning lights will glow steady.
- Press the individual Raise or Lower buttons (UP or DOWN arrows) to raise or lower the position indicated in relation to the motorhome icon.
- A yellow light indicates the side, end or corner of the motorhome is low. Lower the opposite side or end of motorhome to achieve level. If a level position cannot be achieved by lowering, raise the motorhome according to light yellow lights.
- Turn the ignition and control panel off.
- The system will not be in the sleep mode if the coach was leveled in the manual level mode.

NOTE:
Level the motorhome side-to-side before leveling the motorhome front to rear.

Dump Button:

With the engine running, press and hold the Dump button located on the leveling control panel. The system will release air from the air springs and lower the suspension. When the button is released, the suspension will slowly return to normal ride height.

With the engine off, press and hold the Dump button to release all air from the air springs and lower the suspension. Only air in the air springs is released. The air system will remain charged.

CAUTION:
Never lower the suspension and attempt to travel or turn. Body and suspension damage will result.

Raise Button:

With the engine running, and the system at full air pressure, press and hold the Raise button. The system will add air to the springs raising the suspension. When the button is released, the suspension will slowly return to normal ride height.

NOTE:
The motorhome will raise approximately 4". This is helpful when negotiating driveways.

CAUTION:
Do not rely solely upon the travel light. It is the motorhome operator's responsibility ensure the air suspension system is ready for travel.

LEVELING - HYDRAULIC (Optional)

The three-point leveling system was designed to reduce sight selection problems and stabilize the motorhome when parked. Leveling the motorhome can be accomplished by using either a manual or automatic procedure. The system features a remote control panel (located next to the driver seat) a multiple warning system with Jacks Down light and a warning bell sounds when any jack is extended between 2 to 6 inches from fully retracted position.

Leveling System Safety Features:

The leveling system has safety features to prevent a jack from extending during travel. The control panel will not activate until the following safety features are in place.

- Turn the ignition switch to the ACC position.
- Place the transmission in Neutral.
- Apply the parking brake.

Warning Features Include:

- A warning system consisting of flashing lights and a bong alarm when the system is on or a jack is down.
- The bong alarm may activate momentarily when driving over rough roads, or negotiating curves and corners. Usually this indicates low fluid level.

Remote:

The remote control panel is compromised of three Retract/Extend switches, an Automatic Leveling/ Retract All switch and a power ON/OFF switch. Each yellow light and rocker switch combination corresponds to each jack as positioned on the chassis.

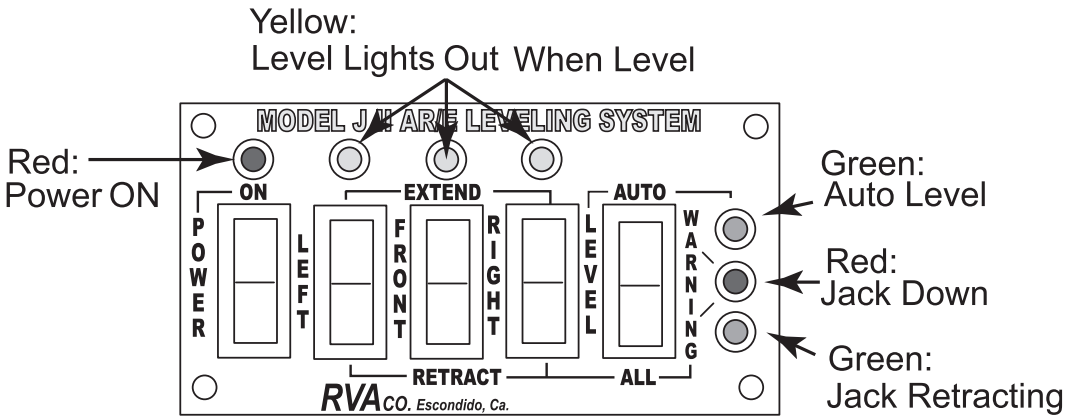

080261c

Indicator Lamps:

- A yellow lamp above any rocker switch indicates a low level condition.
- A flashing green lamp indicates the system is in Automatic Leveling mode or Jacks All Retract mode.

CAUTION:

The leveling jacks are not designed for changing tires. This can cause problems with the suspension system, frame alignment and damage to the windshields. Never use the jacks to elevate any wheel position off the ground.

CAUTION:

Do not move motorhome while the jacks are still in contact with the ground or extended, damage to the jacks can occur.

Prior to Leveling:

- Ensure proper battery voltage. The remote switches will operate with a minimum of 7.5 Volts DC. Optimum requirements for operation are voltages above 9.6 Volts DC.
- Select a level site if possible or park the motorhome with the front facing downhill.
- Apply the parking brake. Place the transmission in Neutral.
- Lower the air suspension by stepping on the brake several times until system air pressure is below 60 psi. With the ignition on, push and hold the Air Dump switch to lower the suspension. This reduces the amount the jack will need to extend before making contact with the surface.

CAUTION:
Survey the area around and under the motorhome for obstructions that can damage the motorhome or undercarriage components before lowering the air suspension. Damage to the mud flap may occur if it is located over a raised area.

CAUTION:
Ensure the potential jack contact points are clear of obstructions or depressions before operation. Keep all people clear of the motorhome during the leveling system operations. Never expose hands or other parts of the body near hydraulic leaks. Hydraulic lines are under high pressure. Oil leaks may cut and penetrate the skin causing serious injury.

CAUTION:
Hot asphalt, gravel or dirt may not support the weight that is placed on the hydraulic jack pads. Place thick plywood under the jack pads to help disperse the weight. If blocking up a rear jack pad to gain added clearance when the motorhome is on a slope, place a wheel chock at the opposite set of rear wheels to prevent the motorhome from rolling.

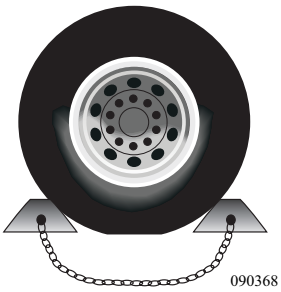

Properly chock wheels to prevent the motorhome from rolling.

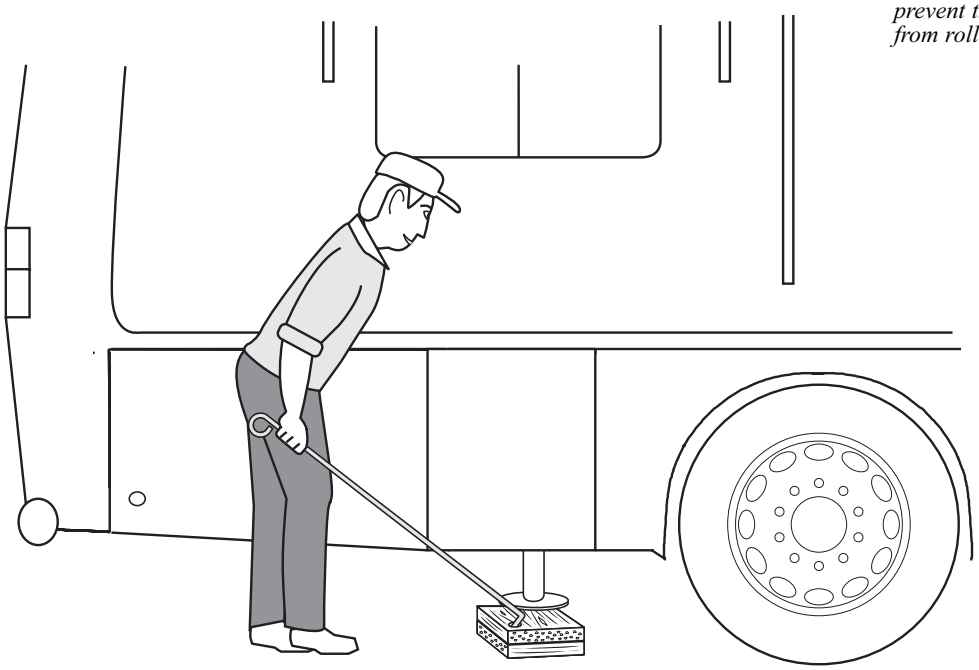

Manual Leveling

Manual Leveling Operation:

- Follow the instructions in *Prior to Leveling*.
- Turn the ignition switch to ACC.
- Turn on the jack control power switch.
- Press and hold the individual jack switches to the extend position until all jacks are touching the ground.

CAUTION:
Prior to leveling the motorhome it is important that all jacks be in contact with the ground to stabilize and support the frame. No single jack should be used solely to level the motorhome. Using an improper leveling process can result in applying excess torsion stress/twist to the chassis, frame and body, resulting in damage to the windshield or entry door malfunction.

- Extend the front jack an additional ½". This allows the front jack to act as a pivot point.
- Incrementally extend jacks (rather than over-extending a single jack to prevent damage) until the motorhome is level.
- Make final adjustments using the Extend and Retract switches.
- Turn OFF the Power switch.
- Turn OFF the Ignition switch.

NOTE:
If additional height or surface support is needed, construct a 1' x 1' wooden block made from two pieces of ¾" plywood for a total thickness of 1½". Drill hole in corner and use awning wand to slide wooden block under jack pad.

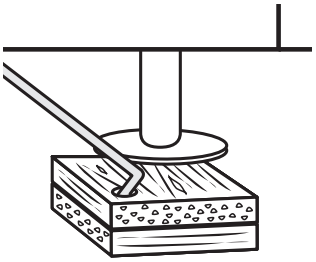

020185

Automatic Leveling

The automatic function of the leveling system should only be engaged when the site is relatively level and solid to prevent excessive twist/stress to the frame. The All Jacks Retract mode or Manual mode can be engaged at any time during automatic leveling operation. Prior to, and during the automatic leveling process, it is essential that there is no movement in the motorhome.

Automatic Leveling Operation:

- Follow the instructions in Prior to Leveling.
- Turn the ignition switch to ACC.
- Turn on the jack control power switch.
- Press the Level switch to AUTO.
- The top green light will start blinking. After a ½ second delay, the pump motor will activate and all jacks will extend.

NOTE:
When the jacks are extended, a red Jacks Down warning light will blink and the bong alarm will sound. The alarm will sound if the jacks are down and ignition switch is turned ON.

- The system will attempt to complete the leveling process in one operation. The motorhome is level when all yellow lights, as well as green lights, go out.
- If leveling is unsuccessful on the first cycle the system will attempt to level four subsequent times at seven second intervals.
- If both green lights start flashing alternately, the system has reached maximum extension on one or more jacks. One or more yellow lights will blink indicating additional height is required under one of the jack pads.
- When the leveling process is complete the red warning light will flash, indicating the jacks are down.
- Turn OFF the jack control Power switch.
- Turn OFF the ignition switch.

NOTE:
If additional height or surface support is needed, construct a 1' x 1' wooden block made from two pieces of ¾" plywood for a total thickness of 1½". Drill a hole in one corner and use the awning wand to slide the wooden block under the jack pad.

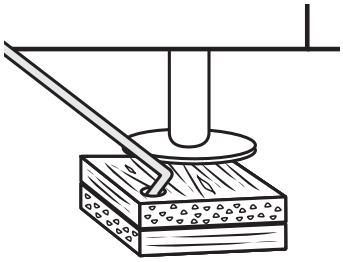

020185

Retracting Leveling Jacks

Prior to retracting the jacks, it is advisable to start the engine and build air pressure.

- Turn the ignition switch to ACC.
- Confirm that the parking brake is applied.
- Turn the jack control Power switch ON.
- Momentarily press the level switch to ALL.
- The red warning lamp will stop blinking and the "bong" alarm will silence when all jacks are retracted.

INSPECTION:
Before moving the motorhome always perform a visual inspection to be sure that all jacks have fully retracted. Remove any debris that may be on the jack pad.

Hydraulic pressure, in all jacks, is automatically released when the All Jacks Retract switch is pressed. The jacks retract by the weight of motorhome and the retract springs on each jack. The bottom green light will begin blinking and all jacks will retract. This operation is on a four-minute timer. After four minutes, the green light will stop blinking and go out.

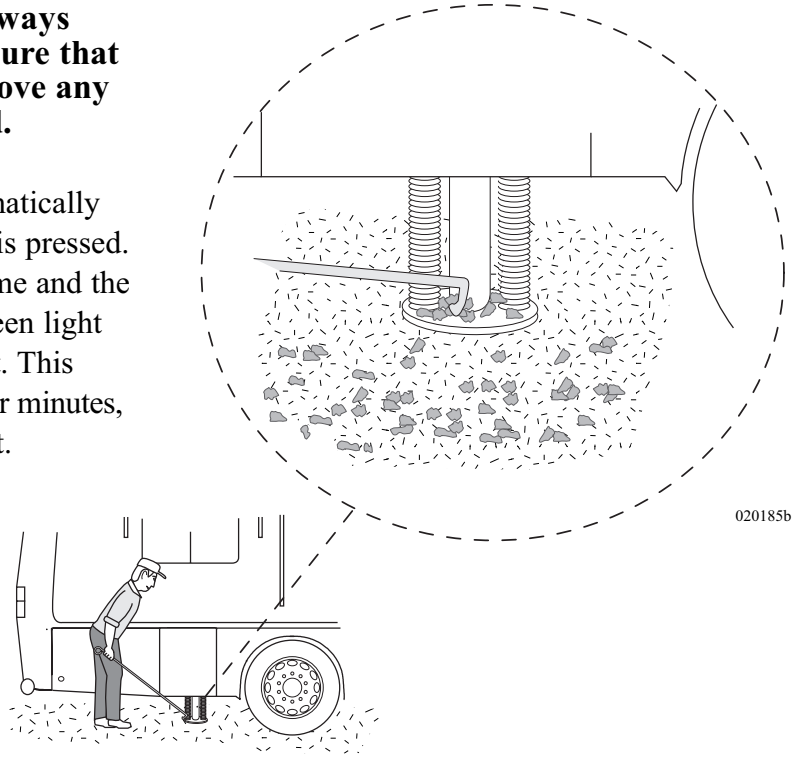

Manual Override

In case of mechanical or electrical failure that would prevent the leveling jacks from retracting, the hydraulic pump manifold is equipped with emergency manual retract valves that allow the fluid that is under pressure in each jack to return to the reservoir. The hydraulic pump is located at the curbside front with easy access through the generator compartment.

CAUTION:
The motorhome will raise or lower when the manual retract valves are opened. If it becomes necessary to manually retract the jacks, do not crawl under the motorhome to access the valves. Confirm there is sufficient clearance so the valves may be opened safely.

To operate the manual system:

- Turn all three T-handle valves counterclockwise until they stop.
- When the jacks are fully retracted, rotate all the valves fully clockwise. If one of the jacks is not holding pressure, check to see that the manual retract valves are fully tightened.

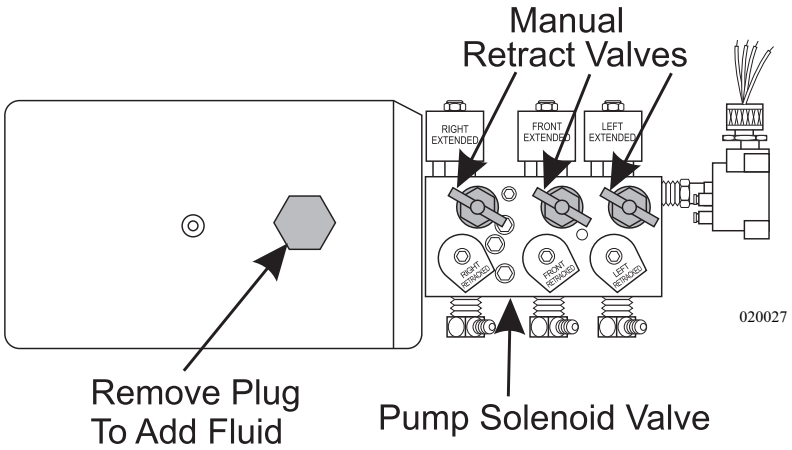

Maintenance

When the jacks are fully extended, occasionally wipe dirt away from the jack rod to help lengthen the life of the jacks. How often this should be done varies with jack usage. Dexron III® will serve as a solvent, as well as a lubricant. Occasional oil or grease on the extended jack ram is normal and aids in the lubrication of the seals. The system is designed for self-purging in the event any component of the hydraulic system has been removed or repaired.

To Purge the System:

- Fully extend and retract each jack twice.

Calibration:

The transmitter module may require calibrating to obtain an accurate level indication. The calibration procedure requires two persons for convenience and accuracy and should only be performed by qualified service technicians.

Adding Fluid:

Indication of low fluid levels is the bong alarm intermittently engaging when turning corners, or the pump whining or gurgling. Use Dexron III® automatic transmission fluid to fill the reservoir.

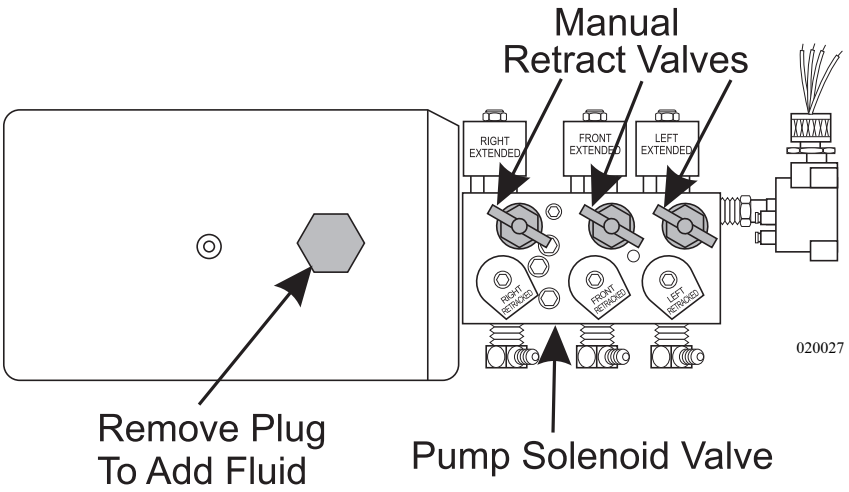

To Fill the Reservoir:

1. Turn the ignition switch to the ACC position. Turn the jack control Power switch ON.
2. Extend any jack six inches from the fully retracted position. All other jacks remain fully retracted.
3. Unscrew the reservoir cap from the top of the reservoir.
4. Open a window or the entry door so the bong alarm is audible from outside the motorhome. Slowly fill the reservoir with fluid until the bong alarm stops.
5. Replace the reservoir cap.
6. To retract the extended jack, push the RETRACT button.
7. Turn the jack control Power switch OFF.
8. Turn OFF the ignition switch.

The diesel engine operates differently from the conventional gasoline engine. Gasoline engines control engine speed using a butterfly throttle plate controlling air/fuel mixture inlet flow. As the throttle plate opens, vacuum created by the piston velocity draws the metered fuel/air charge into the combustion chamber, then ignites from a controlled electric ignition source. Closing the throttle plate limits the fuel/air supply, slowing engine speed, increasing intake manifold vacuum.

The diesel engine in the motorhome controls engine speed by varying fuel supply only. No throttle plates are used. An exhaust driven turbine system (turbocharger) compresses the fresh air supply into the engine. The fuel is injected under pressure into the combustion chamber. Ignition of fuel/air charge occurs from heat generated by rapid high compression. The turbo boost gauge registers amount of intake manifold pressure measured in lbs./in^2. Therefore, no intake manifold vacuum exists.

Diesel engine RPM (revolutions per minute) operating speeds are generally much lower than that of the gasoline engine. Peak torque and horsepower output values occur at much lower engine speeds. Idle speeds between the two engine types are similar, however maximum engine speeds are quite different. The gasoline engine generally is not regulated to a maximum engine speed. The maximum engine speed on a diesel engine is controlled by an engine speed governor set by the engine manufacturer.

WARNING:
Do not operate a diesel engine where there are or can be combustible vapors. Vapors can be drawn through the air intake system and cause engine acceleration and over-speeding, resulting in fire, explosion and extensive property damage. Numerous safety devices are available, such as air intake shutoff devices, to minimize risk of an engine over-speeding where an engine (due to its application) might operate in a combustible environment, such as fuel spills or gas leaks.

INFORMATION:
It is the responsibly of the owner to operate the engine in a safe manner. Consult the engine manufacturers owners manual for detailed operating and maintenance instructions.

ENGINE DIAGRAM
Cummins - I.S.M-II Standard

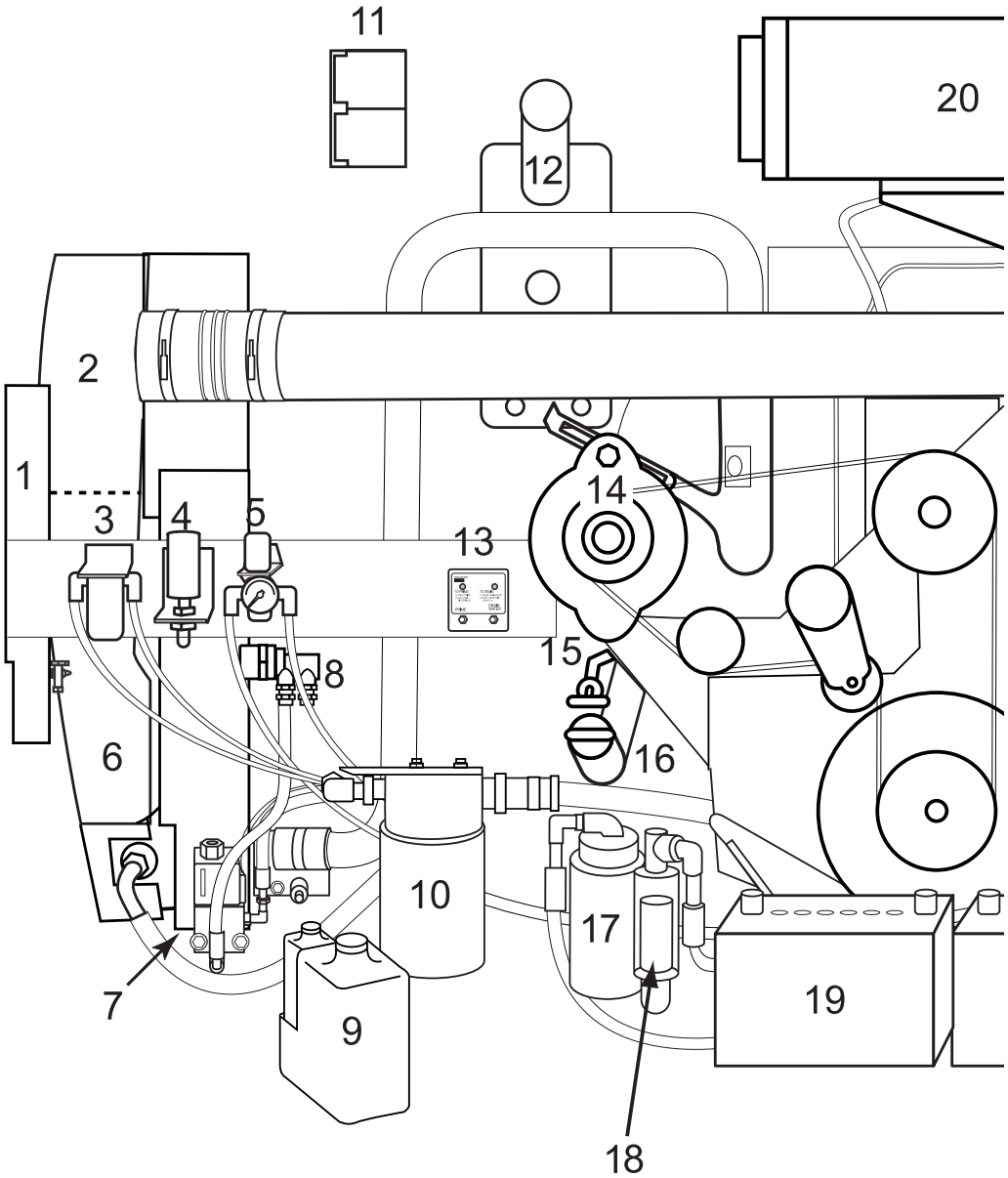

Engine Call out Data:

1. Hydraulic Cooler
2. Charge Air Cooler
3. Tag Lift Solenoid
4. Air Filter Minder
5. Tag Axle Regulator
6. Radiator
7. Electric Override Valve
8. Thermovalve
9. H^2O Purge Bottle
10. Hydraulic Filter
11. Block Heater Outlet
12. Coolant Reservoir
13. Filter Control Panel
14. Alternator
15. Engine Oil Dipstick
16. Engine Oil Fill
17. Primary Fuel Filter
18. Prestrainer: Diesel Fuel

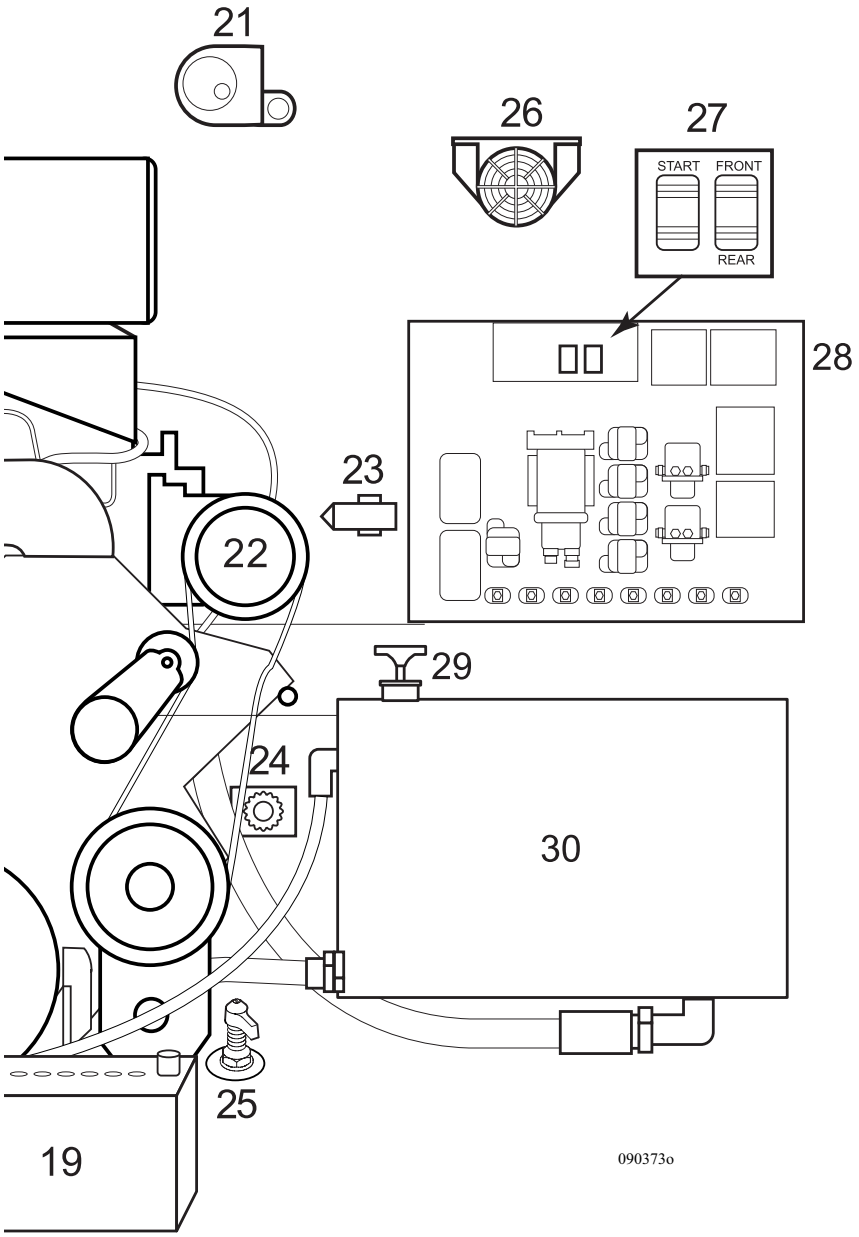

19. Chassis Batteries
20. Air Filter
21. Reel light
22. Air Conditioning Compressor
23. Air Governor
24. Engine Diagnostic Plug
25. Chassis Battery Disconnect
26. Back-up Alarm
27. Engine Front/Rear Start Switch
28. Rear Run Box
29. Hydraulic Oil Dipstick
30. Hydraulic Oil Reservoir

Cummins ISX (Optional)

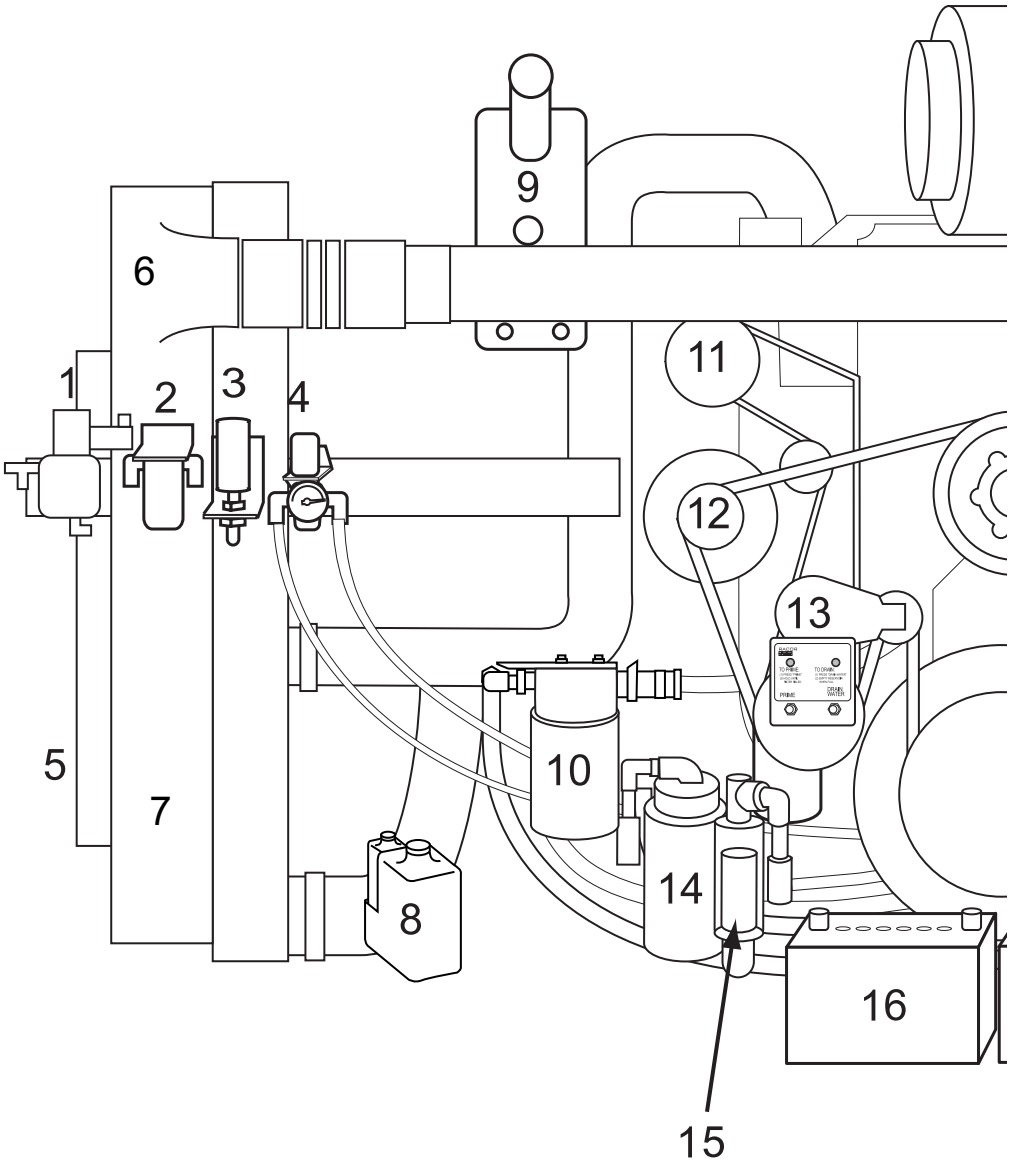

Engine Callout Data:

1. Hydraulic Fan Control Module
2. Tag Lift Solenoid
3. Air Filter Minder
4. Tag Axle Regulator
5. Hydraulic Cooler
6. Charge Air Cooler
7. Radiator
8. H^20 Purge Bottle
9. Coolant Reservoir
10. Hydraulic Filter
11. Air Conditioning Compressor
12. Alternator
13. Filter Control Panel
14. Primary Fuel Filter

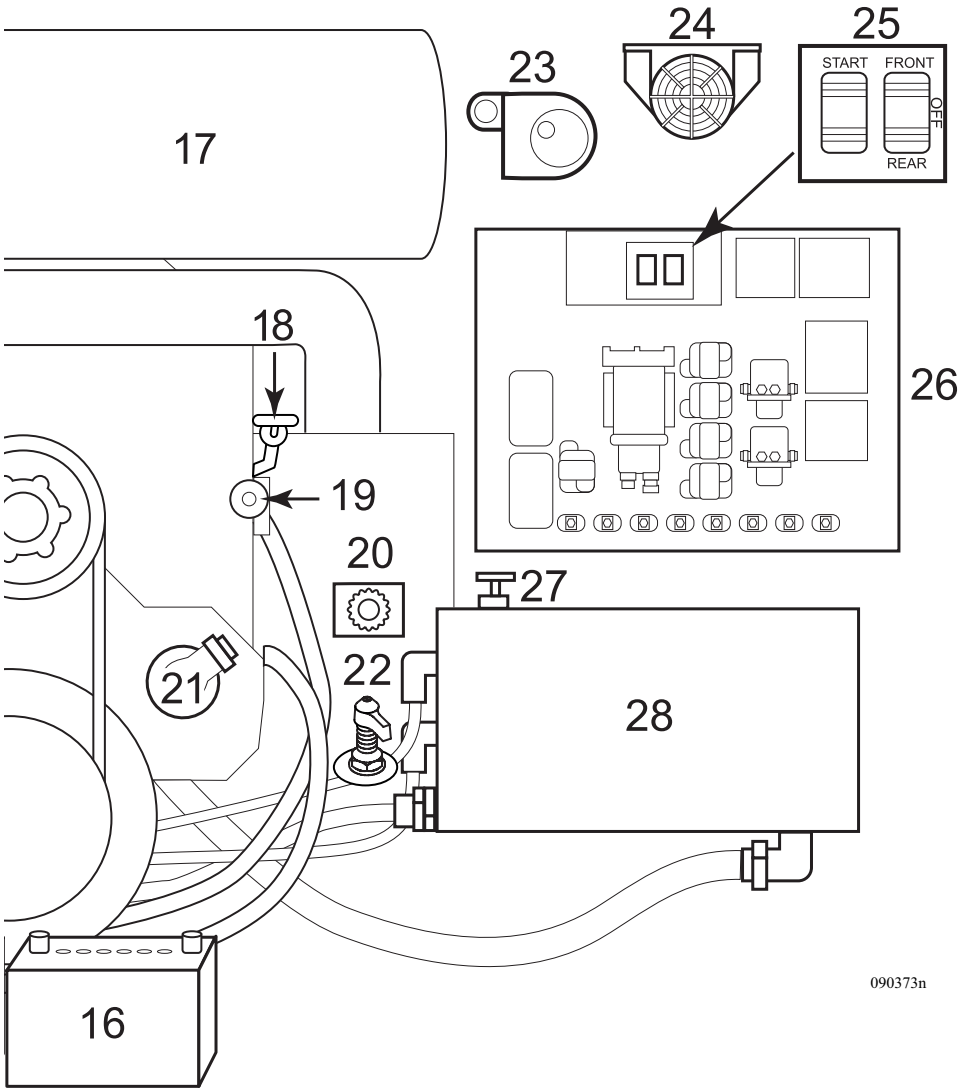

15. Prestrainer: Diesel Fuel
16. Chassis Battery
17. Air Filter
18. Engine Oil Dipstick
19. Air Governor
20. Engine Diagnostic Plug
21. Engine Oil Fill
22. Chassis Battery Disconnect
23. Reel Light
24. Back-up Alarm
25. Engine Front/Rear Start Switch
26. Rear Run Box
27. Hydraulic Oil Dipstick
28. Hydraulic Oil Reservoir

Detroit Diesel (Optional)

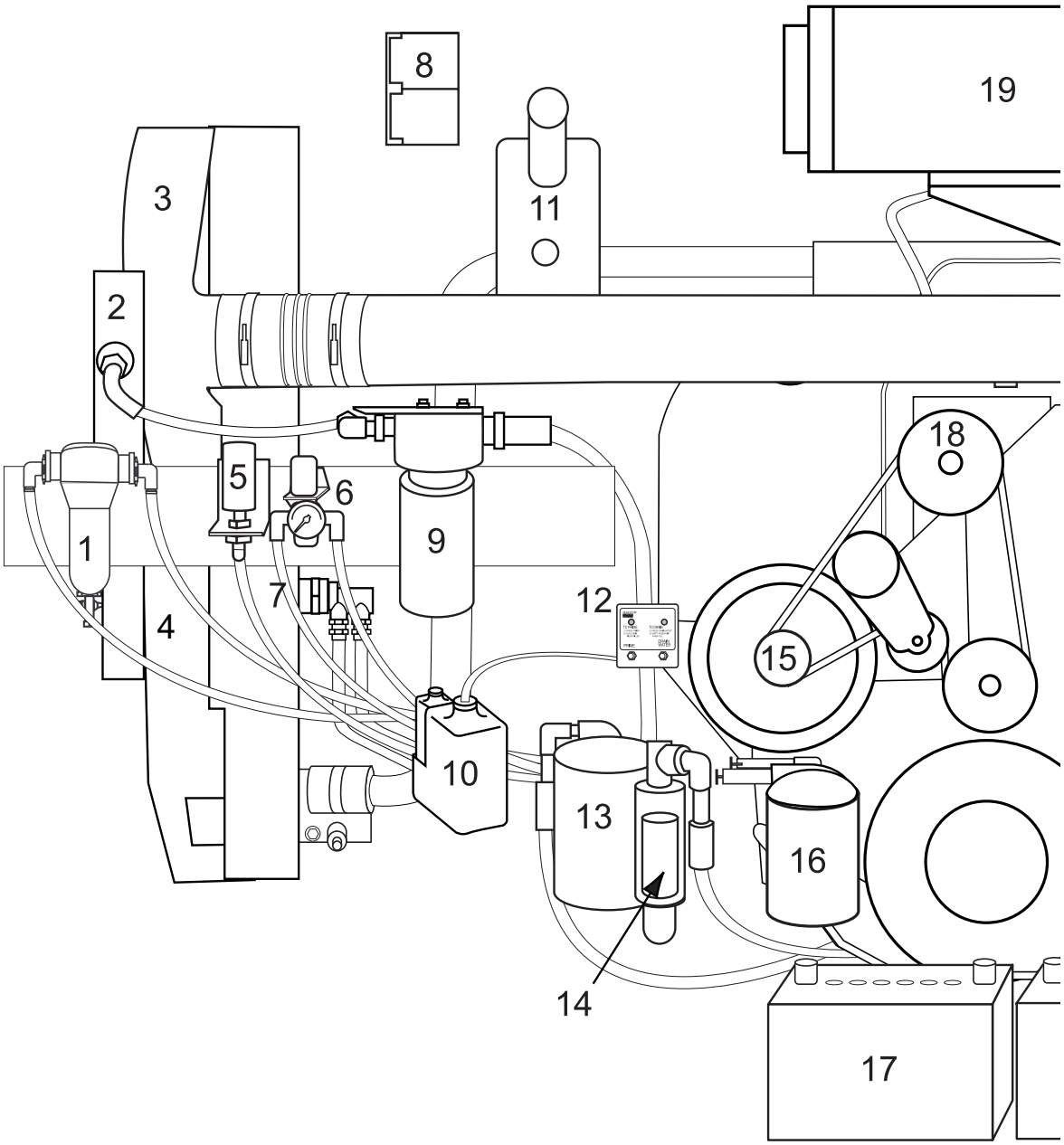

Engine Call out Data:

1. EGR Filter
2. Hydraulic Cooler
3. Charge Air Cooler
4. Radiator
5. Air Filter Minder
6. Tag Axle Regulator
7. Thermovalve
8. Block Heater Outlet
9. Hydraulic Oil Filter
10. H^20 Purge Bottle
11. Coolant Reservoir
12. Filter Control Panel
13. Primary Fuel Filter
14. Prestrainer: Diesel Fuel
15. Alternator
16. Coolant Filter

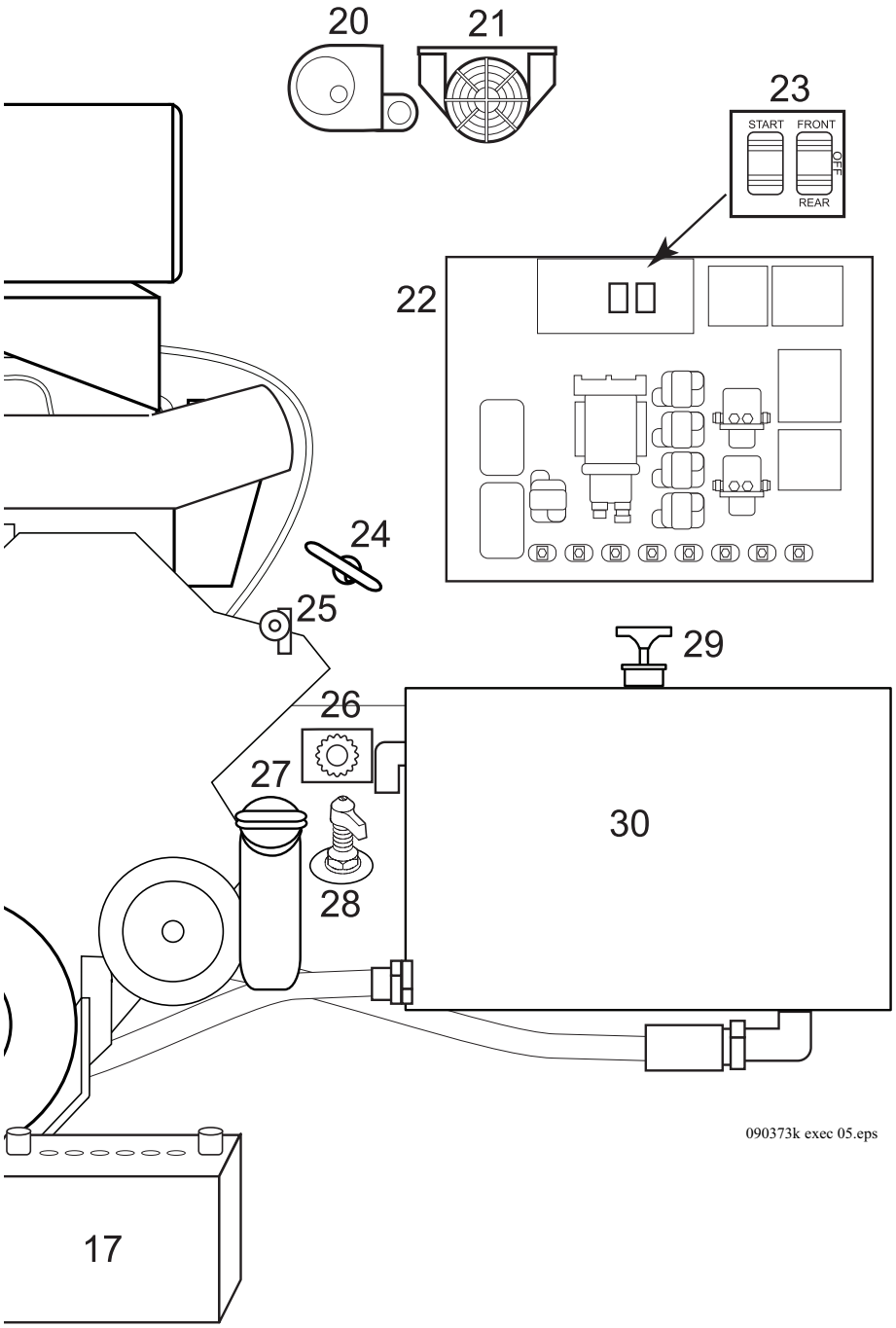

17. Chassis Batteries
18. Air Conditioning Compressor
19. Air Filter
20. Reel Light
21. Back-up Alarm
22. Rear Run Box
23. Rear Start Switch
24. Engine Oil Dipstick
25. Air Governor
26. Engine Diagnostic Plug
27. Engine Oil Fill Tube
28. Chassis Battery Disconnect
29. Hydraulic Oil Dipstick
30. Hydraulic Oil Reservoir

STARTING PROCEDURE
Normal Starting

With the foot throttle in the idle position, turn the key to the start position. When the engine starts, release the key. Allow the engine to idle with no load for three to five minutes. Engine coolant temperature should be up to normal operating range (140º F / 60º C to 212º F / 100º C) before operating the engine under full throttle.

NOTE:
The engine does not have a "wait to start" feature.

Cold Weather

In sub-freezing or extreme cold, engine oil becomes thick and battery output is reduced. Thick oil, combined with less amperage available from the battery, increases difficulty in starting the engine.

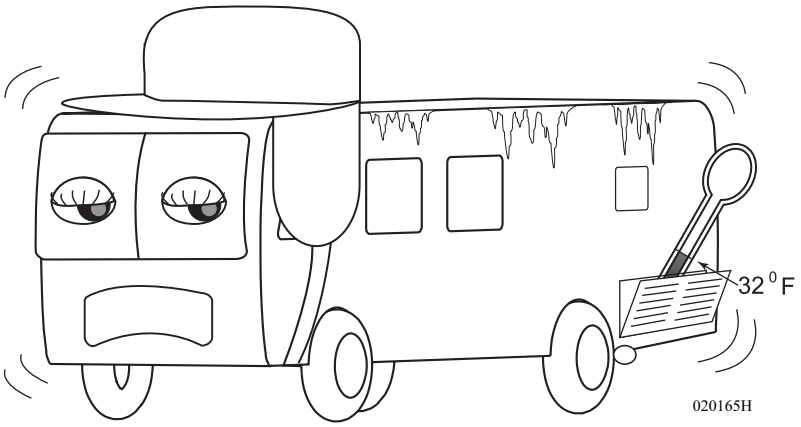

Depending on ambient temperature it may be necessary to pre-heat the engine. Located in the coolant passage in the engine is a heating unit that operates from 120 Volt AC. If it is necessary to pre-heat the engine due to ambient temperature, it is recommended to activate the block heater the night before, allowing several hours for the block heater to warm the engine.

Another method to preheat the engine is to use the Aqua-Hot. The optional Aqua-Hot engine pre-heat function will heat engine coolant and the interior. An indication of 100º F or higher of the engine temperature gauge should be sufficient for the engine to start.

It is possible to operate diesel engines in extremely cold environments when the engine is properly equipped with the correct lubricants, fuels and coolant. Cold weather operation can be defined in two categories: Winter and Arctic.

WINTER (32º to -25º F) (0º to -32º C): Use a 50% antifreeze to 50% water coolant mixture, use multi-viscosity oil meeting manufacturers specifications and fuel to have maximum cloud pour points 10º F (6º C) lower than the ambient temperature in which the motorhome operates.

ARCTIC (-25º to -65º F) (-32º to -52º C): Use a 60% antifreeze to 40% water coolant mixture. Use oil meeting manufacturers specifications and fuel to have maximum cloud pour points 10º F (6º C) lower than the ambient temperature in which the motorhome operates.

INFORMATION:
Refer to the engine manufacturers Owner's Manual for more detailed information.

NOTE:
The engine is filled with 15-40w multi-viscosity oil from the factory. Generally this will start the engine in temperature down to 15º F. If the engine has normalized to a temperature below 15º F it will be necessary to pre-heat the engine before starting.

CAUTION:
Upon cranking an engine in cold temperature, the starter may rapidly engage and disengage. If this occurs STOP attempting to crank the engine as starter damage may occur. Pre-heat the engine before making further attempts to start the engine.

Block Heat:

The switch labeled **Block Heat** operates the receptacle for the block heater cord. The block heater, depending on engine size, is rated between 850 and 1500 watts. For efficiency hook to shore power. An auxiliary method is to plug the block heater cord to a separate power cord, as long as the power cord is rated for 15 Amps and the outlet used is GFCI protected rated at 20 Amps. The engine may require several hours of pre-heating before before starting. It is recommended to start pre-heating the engine the night before departure.

To Use the Block Heater:

- Hook to shore power and plug in block heater cord to the receptacle.
- Turn on the Block Heat switch.

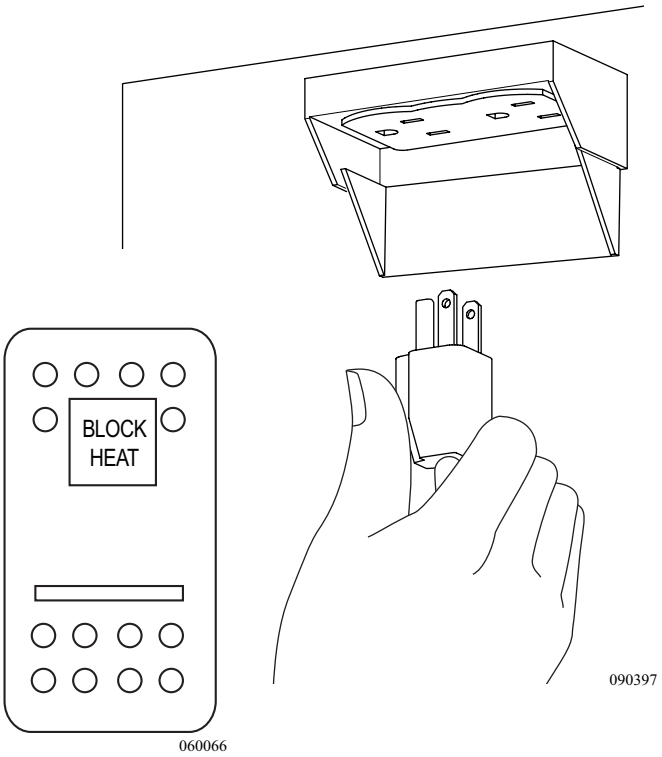

Located on Dash

Aqua-Hot Engine Pre-Heat:

The diesel burner inside the Aqua-Hot heats an internal engine coolant loop. When the Aqua-Hot Engine Pre-Heat switch is turned on, an engine coolant pump inside the Aqua-hot circulates heated coolant through the engine. The time it takes for the Aqua-Hot to pre-heat the engine depends on ambient temperature. Allow at least three hours of pre-heating before attempting to start the engine.

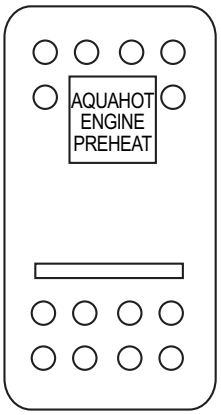

060066

To Use the System:

- Turn the Aqua-Hot switch at the kitchen to the **ON** position.
- Turn the Aqua-Hot Engine Pre-Heat switch at the dash to the **ON** position. This activates the engine pump inside the Aqua-Hot.

Tips:

1. When operating below 32º F, the Aqua-Hot and/or block heater preheat can enhance engine starting by easing cranking and helping to prevent engine misfire and white smoke during starting.
2. Always follow the recommended oil, fuel, and coolant specifications as outlined in the OEM Engine Manual. Proper oil viscosity and coolant concentration eases engine starting and helps to avoid engine damage.
3. Allow the engine to idle until it sufficiently warms for operation. Utilize the fast idle feature to quicken the process. Wait to operate the motorhome for at least three minutes or until the coolant temperature begins to rise.
4. Check the air inlet and filter daily, or as necessary, when driving in snow conditions.
5. The demand on batteries increase during winter; check and service the batteries frequently to help ensure trouble-free starts.
6. Start out slowly with the motorhome to allow the transmission and axle lubricants time to circulate and warm before putting them under full load.

WARNING:
Do not use ether cold starting additives to start the engine as damage may occur.

ENGINE OIL

Cummins Engine Requirements:

The maintenance guidelines in the Cummins Operation & Maintenance Manual are the recommendations for the engine to extend the engine life and improve performance, resulting in cost efficient operations. A good maintenance schedule begins with a daily awareness of the engine and its various systems.

A high grade 15W-40 multiviscosity heavy duty lubricating oil meeting Cummins Engineering Specification CES 20071 or CES 20076, American Petroleum Institute (API) specification CH-4 which can be used as an alternative to CES 20071 is recommended. Lubricating oils meeting API CG-4 specifications may be used at a reduced drain interval. The engine uses Pennzoil 15W-40 heavy duty engine lubricating oil that meets Cummins specifications. A critical factor in maintaining engine performance and durability is the use of high grade multigrade lubricating oil and strict adherence to the maintenance service intervals.

LUBRICATING OIL RECOMMENDATIONS AND SPECIFICATIONS

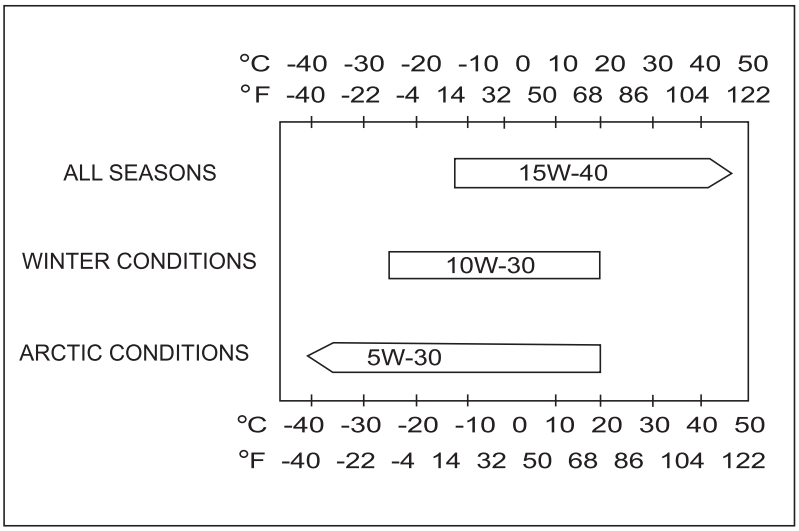

070201

A straight weight or monograde lubricating oil is not recommended. Shortened drain intervals may be required as determined by a close monitoring of the lubricating oil condition by means of an oil sampling program. The use of oil analysis to extend drain interval is not recommended. There are numerous variables which is the basis of the recommendation.

Synthetic oils API category III specifications are recommended for extreme cold temperatures only. Low viscosity oils, used for winter operations, will aid in starting. Synthetic oils, or oil with adequate low temperature properties used for Arctic operations where the engine cannot be kept warm when shut down, will aid in starting. The use of synthetic oils should not be used to extend drain intervals. Extended oil change intervals can decrease engine life and possibly affect the engine warranty.

Oil additives should not be used unless the oil supplier or oil manufacturer has been consulted and provided positive evidence or data establishing satisfactory performance in the engine.

NOTE:
The engine does not require a “break-in” procedure.

INFORMATION:
Refer to the Engine Manufacturers Owners Manual for details on the oil maintenance schedule.

Detroit Engine Requirements:

The maintenance guidelines in the Detroit Diesel Engine Operators Guide are the recommendations for the engine to extend the engine life and improve performance, resulting in cost efficient operations. A good maintenance schedule begins with a daily awareness of the engine and its various systems.

A high grade 15W-40 multiviscosity heavy duty lubricating oil meeting Detroit Diesel requirements, American Petroleum Institute (API) specification CI-4 is recommended for EGR equipped Engines. Lubricating oils meeting API CI-4 or CH-4 may be used in engines without EGR system.

A critical factor in maintaining engine performance and durability is the use of high grade multi-grade lubricating oil and strict adherence to the maintenance service intervals. At temperatures below -20F 5W-XX and 10W-XX oils may be used provided they are API CI-4 rated for EGR equipped engines. Low viscosity oils, used for winter operations, will aid in starting.

CAUTION:
Straight weight, or monograde lubricating oil, is not recommended.

CAUTION:
Do not use oil analysis to extend drain intervals.

Synthetic oils may be used in Detroit Diesel engines provided they are API licensed and meet the performance and chemical requirements of non-synthetic oils outlined in the Detroit Diesel Engine Operators Guide. Synthetic oils can improve low temperature flow properties and high temperature oxidation resistance. Synthetic oils, or oil with adequate low temperature properties used for Arctic operations where the engine cannot be kept warm when shut down, will aid in starting. The use of synthetic oils should not be used to extend drain intervals. Extended oil change intervals can decrease engine life and possibly affect the engine warranty.

Oil additives should not be used in the Detroit Diesel engines. Lubricants meeting the Detroit Diesel specifications outlined in the Operators Guide contain a balanced additive treatment. Supplemental additives are generally not necessary and can be harmful.

NOTE:
Engine damage resulting in the use of supplemental oil additives is not covered by Detroit Diesel Corporation warranty.

NOTE:
The engine does not require a "break-in" procedure.

ENGINE SHUTDOWN

Allow the engine to idle three to five minutes after a full load operation. This allows adequate cool down of pistons, cylinders, bearings and turbocharger components. Under normal driving conditions, exiting the highway is generally lighter engine operation and the need for the three to five minutes is not necessary.

Extended Engine Shutdown

When the motorhome has been sitting for extended periods, 30 days or more, verify all the fluid levels are correct. Follow the normal starting procedures. If the oil pressure gauge does not register within 15 seconds, shut off the engine immediately to avoid damage. Consult the engine manufacturer's owner's manual for guidelines on troubleshooting low oil pressure, or contact a qualified service technician. Allow the engine to idle for five minutes before operating under a load.

COOLANT

A fully formulated antifreeze or coolant containing a precharge of Supplemental Coolant Additives (SCA) is recommended to significantly simplify coolant system maintenance. The difference between a fully formatted antifreeze and a fully formatted coolant is the percentage of water. Both contain balanced amounts of antifreeze, SCA, buffering compounds and a percentage of good clean quality water. The antifreeze of coolant must meet ethylene glycol or propylene glyco recommendations.

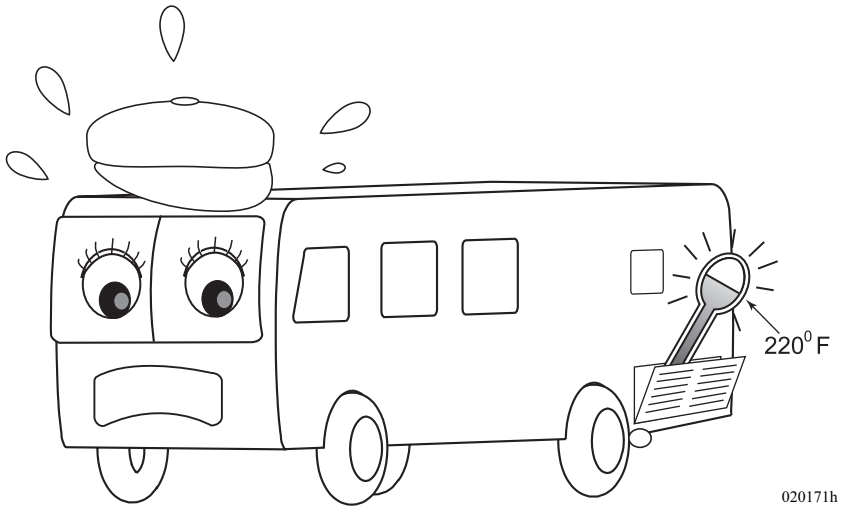

Clean, quality water in a 50/50 ratio (40 to 60% working range) mixed with fully formatted antifreeze will provide protection from -34º F to 228º F. The 50/50 mix ratio must be premixed prior to being put in the system. Placing antifreeze and water in the cooling system is not recommended. Consult the manufacturer's OEM for more details.

NOTE:
An over concentration of antifreeze, or the use of high silicate antifreeze, can cause damage to the coolant system and engine. Antifreeze is essential in every climate.

WARNING:
Do not continue engine operation when engine temperature rises above 220º F. At 220º F the Engine Warning light will illuminate and the engine will begin to de-rate in power output. Continued operation will result in engine damage.

NOTE:
Consult the engine manufacturer owners guide for more detailed information.

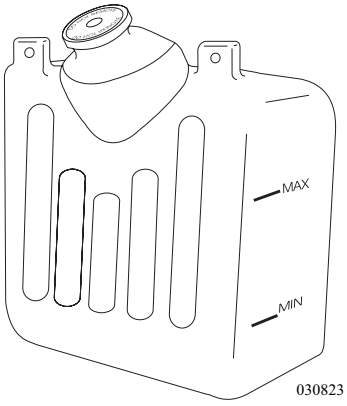

Cummins ISM Engine Coolant Reservoir

Engine Coolant Reservoir:

The engine coolant reservoir is connected to the radiator by a hose. When the motorhome is driven, coolant heats and expands. A portion of fluid displaced by expansion flows from the radiator into the reservoir tank. When the engine is stopped, the coolant cools and contracts. Coolant is drawn back in the radiator by a vacuum. Thus, the radiator is kept filled with coolant to the desired level at all times resulting in increased cooling efficiency. The coolant level should be at, or slightly above, the appropriate mark on the reservoir tank when the system is cold.

CAUTION:
To avoid scalding hot steam or coolant from being released from the engine cooling system, never remove the reservoir cap while the engine is running or hot. Failure to follow this warning may result in damage to the engine cooling system and possibly cause severe personal injury.

- Check the coolant level daily or when refueling.
- If the coolant is below the MIN mark, the low coolant alarm will sound and the low coolant light will appear on the dash.
- The coolant level remains between the MAX and MIN level in the reservoir with the ISM engine, or will be visible in the sight glass with the ISX and Detroit engines.

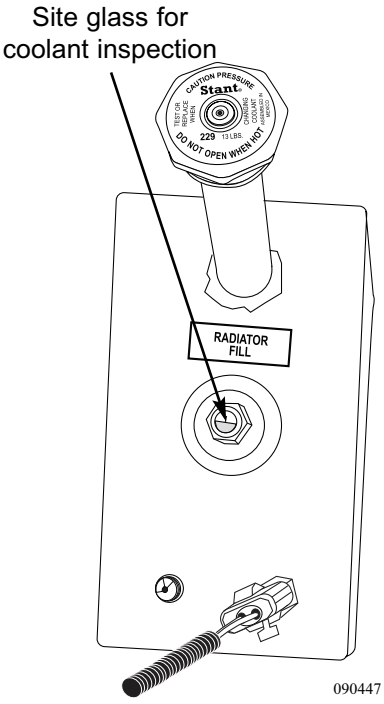

Cummins ISX/Detroit Engine Coolant Reservoir

INSPECTION:
Stop the motorhome and inspect the coolant level before continued operation.

INFORMATION:
Refer to the Engine Manufacturer Owner's Manual for details on engine coolant maintenance.

Cummins Engine Coolant Additive:
Fully formulated products contain SCA and are required to protect the cooling system from fouling, solder blooming and general corrosion. The coolant filter is required to protect the coolant system from abrasive materials, debris and precipitated coolant additives.

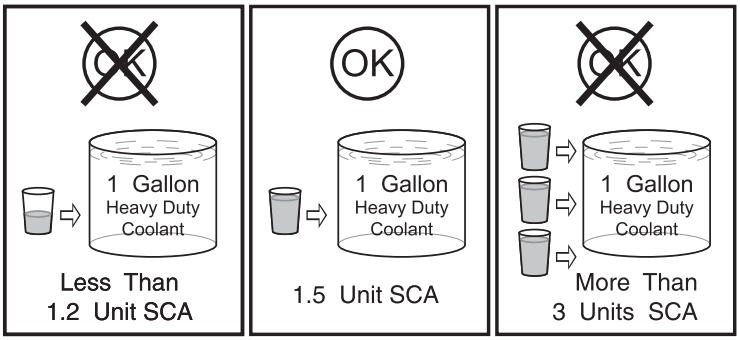

Supplement coolant additives, or equivalent, are used to prevent cylinder liner pitting, corrosion and scale deposits in the cooling system. Use the correct Fleetguard coolant filter to maintain the recommended SCA concentration in the system. Maintain the correct concentration by changing the service filter at each oil drain interval.

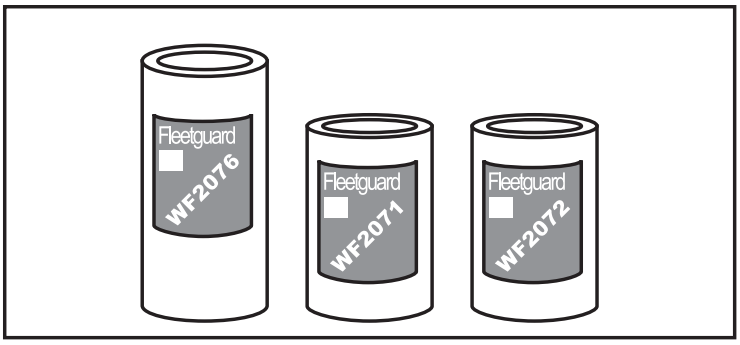

090331

NOTE:
The correct filter is determined by the total cooling system capacity and oil drain interval. Refer to the Coolant Capacity Specifications in this section.

CAUTION:
Insufficient concentration of the coolant additives will result in cylinder liner pitting and engine failure. The SCA concentration must not fall below 1.2 units or exceed 3 units per gallon of cooling system capacity.

Use the correct Fleetguard coolant filter to maintain the recommended SCA concentration in the system. Maintain the correct concentration by changing the service coolant filter at each oil drain interval. The oil pressure gauge, temperature gauge, warning lamps and other safety lamps should be checked daily to ensure proper operations.

NOTE:
Refer to the OEM engine manual for maintenance instructions and information. Engine coolant must be changed every two years. The correct filter is determined by the total cooling system capacity.

Detroit Engine Coolant Additive (DDC Series 60):

Fully formulated products contain SCA and are required to protect the cooling system from fouling, solder blooming and general corrosion. The coolant filter is required to protect the coolant system from abrasive materials, debris and precipitated coolant additives.

Supplement coolant additives, or equivalent, are used to prevent cylinder liner pitting, corrosion and scale deposits in the cooling system. Use the correct Power Cool coolant filter to maintain the recommended SCA concentration in the system. Maintain the correct concentration by changing the service filter and replacing filter according to test strip results.

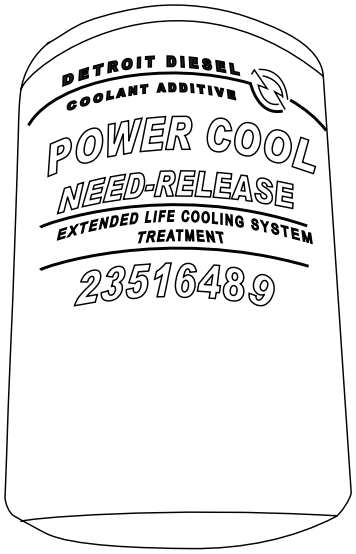

090462

Power Cool 3000	Coolant Concentration Limits
Boron	125 - 500 PPM
Nitrite	900 - 3200 PPM
Nitrate	0 - 1000
Silicone	50 - 250 PPM
Phosphorous	0 PPM
pH	8.0 - 11.0

	Maximum Allowable	
	Parts per Million	Grains Per Gallon
Chlorides	40	2.5
Sulfates	100	5.8
Total Dissolved Solids	340	20
Total Hardness - Magnesium and Calcium	170	2.5

Powertracstrips3.tif

<u>CAUTION:</u>
Insufficient concentration of the coolant additives will result in cylinder liner pitting and engine failure. The SCA concentration must not fall below or exceed the manufacturer recommendations as determined by 3-way test strip check.

Use the correct Power Cool coolant filter to maintain the recommended SCA concentration in the system. Maintain the correct concentration by changing the service coolant filter as indicated by the test strip result at every oil change.

<u>NOTE:</u>
Refer to OEM manual for maintenance instructions. Coolant must be changed every two years.

<u>NOTE:</u>
The correct filter is determined by Detroit Diesel Corporation. Refer to the *Detroit Diesel Operators Guide* for additional information.

When performing maintenance, it is also necessary to **inspect** other components of the cooling system. Have an **inspection** performed of the surge tank cap seal and have the cap pressure tested, at each oil change. The charge air cooler and radiator also requires an **inspection** for cracks, broken welds, secure mounting, and general cleanliness.

It may be necessary to clean the radiator and external coolers more often under certain conditions. Leaves, twigs, road debris and other contaminants can block the radiator and cooler fins resulting in reduced cooling system performance. Blockage can vary depending on road conditions, climate, and regional conditions. Check the radiator and external coolers weekly for blockage, and clean as required. To clean the radiator and external coolers, compressed air is recommended. In the event that road grime, oil, or inadequate cleaning with compressed air is encountered, a high pressure washer and degreaser may be used with caution, as excessive pressure can bend the radiator fins.

This service includes draining the engine coolant, flushing/cleaning the cooling system, **inspecting** the water pump standpipe, replacing the thermostat, gasket and seal, and replacing the coolant and SCA element.

Coolant Hoses:

Rotten, swollen and worn hoses, as well as loose connections, are frequent causes of coolant system problems. Overheating can be caused by a collapsed hose or a clog caused by rubber shedding from a rotten hose. Replace any hose found to be cracked, swollen or damaged. Connections should be **inspected** periodically and hose clamps tightened.

Every 12 months - Inspect all hoses, clamps, and fittings for leaks due to cracking, softness, and loose clamps/fittings. Look for signs of fluid leaks, damaged end fittings, ballooning, chafed, kinked, or crushed hoses, and loose clamps and fittings. Correct any deficiencies found.

Coolant Overheated:

If the engine is overheated, never pour cold coolant into a hot engine. The sudden change in temperature may crack the cylinder head or block. If the engine is hot, fill slowly to prevent rapid cooling and distortion of engine castings.

Inspect the radiator core and CAC for dirt and debris build-up. Wash any accumulations using high-pressure water, being careful not to damage the fins from excessive pressure. Any grease or oil build-up should first be treated with a non-caustic degreaser to ensure a thorough cleaning.

Coolant System - Thawing:

If the coolant system becomes frozen, the motorhome must be towed. Place the motorhome in a warm area until completely thawed. If the engine is operated when the cooling system is frozen it will result in engine overheating due to insufficient coolant circulation. Once thawed, check engine, radiator and related components for damage caused by expansion of frozen coolant.

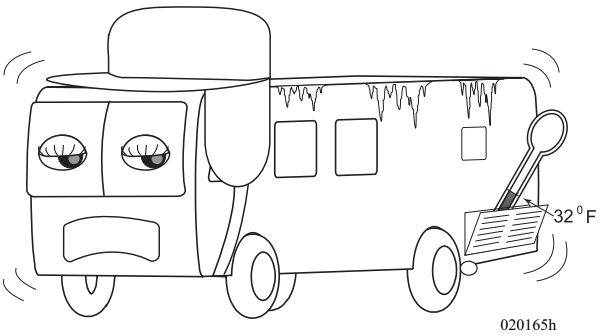

CHARGE AIR COOLER

The diesel engine uses compression to ignite the fuel/air charge. To increase compression inside the combustion chamber (resulting in increased power output) a turbocharger is added to the engine. The turbocharger is a paired housing assembly with impellers inside each housing connected by a common shaft. One impeller is propelled by the engine exhaust, which drives the other impeller. The function of the other impeller is to increase compression inside the combustion chamber by forcing air into the intake manifold. This process works well, however, the intake air charge is heated two different ways. Through convection by the exhaust gases driving the turbocharger and any time air is compressed heat is produced. This has a negative effect inside the combustion chamber resulting in lost power potential. Therefore, a Charge Air Cooler (CAC) is installed to cool the intake air before it enters the engine. The CAC may be mounted to either the top or side of the radiator. The CAC performs the same function as a radiator, cooling air instead of liquid. Ambient air passing through the CAC will cool the engine intake air charge.

After leaving the turbocharger, intake air is compressed and heated to approximately 300º to 375º F., depending on the engine load and throttle position. Before air enters the intake manifold, the CAC cools the intake air temperature to the engine manufacturer specifications. Lowered intake air temperatures reduce exhaust emissions, improve fuel economy and increase horsepower. The CAC will continually expand and contract up to ¼" as throttle increases and decreases.

Visually inspect the charge air cooler, every six months, for dirt and debris that may be blocking the fins. If the motorhome develops an oil leak, there is a possibility that the oil will coat the fins of the CAC. Dust will adhere to the oil film and eventually clog the fins, greatly reducing cooling efficiency. When the oil leak is repaired, the CAC must be thoroughly cleaned.

During each oil change **inspect** the engine side of the radiator/CAC assembly for foreign objects that may cause restriction.

Spraying degreaser on the charge air cooler, as well as using a steam cleaner, will not damage the CAC. **However, pressure washer and steam cleaner nozzles placed too close to the CAC can bend the fins.** The recommended cleaning procedure for the CAC and the radiator, is to use a bucket of mild soap and water. Carefully wash with a bristle brush then rinse using a garden hose, with minimum water pressure, standing back a distance to avoid bending the fins.

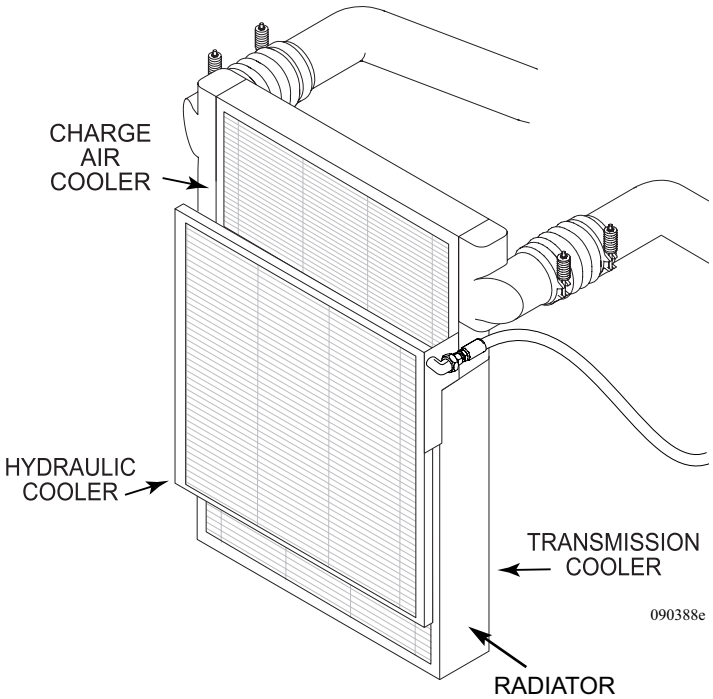

Auxiliary braking systems are designed to supplement the standard air braking system. These devices are not designed to bring the motorhome to a complete stop; however, can assist in controlling the speed of the motorhome. Use of the engine braking system can extend the life of pads, shoes, rotors and drums, saving on costly service brake repairs.

The engine-braking device operates on a different principle than an exhaust brake. An engine brake functions by releasing engine compression. The effect of the engine brake increases with engine speed. When the engine brake is activated the Allison transmission automatically downshifts, utilizing the gear selected and maximizing the engine braking effect.

When the engine brake activates, an electrical signal is sent to the engine ECM (electronic control module). The ECM controls a hydraulic circuit that opens the exhaust valves near the end of the compression stroke. The potential engine braking power depends on turbocharger boost pressure, engine speed, compression ratio, injector timing and when the exhaust valves open.

Located on the left console is a **HI/LOW** switch. The **HI/LOW** switch allows for the selection of different levels of engine braking power. Selecting **LOW** activates the engine brake on three cylinders. Selecting the **HI** setting activates the engine brake on six cylinders.

The engine brake will not be active when:

- Engine speed goes below 850 RPM.
- An electronic fault code is active.

Applying the service brakes will disengage the cruise control. Activating the Jake Brake foot switch will disengage the cruise control and activate the engine brake and brake lights. Use the engine brake when traveling down a hill, on the freeway or exiting the off ramp. The engine brake will allow the engine temperature to decrease while going downhill.

NOTE:
Idle the engine three to five minutes at approximately 1000 RPM to warm the engine before activating the engine brake. Do not operate the engine brake until the engine oil temperature is above 30º C (86º F).

WARNING:
The engine brake is designed to assist the motorhome service brakes. Not for stopping.

TRANSMISSION

The Allison World transmission incorporates the World Transmission Electronic Control (WTEC) system. The system is compromised of five major components connected by a wiring harness: the Electronic Control Unit (ECU), engine throttle position sensor, three speed sensors, remote shift selector (keypad) and the control module. The ECU processes information received from the throttle position sensor, speed sensor, pressure switch and shift selector to provide optimum shift quality. This is accomplished by matching transmission and engine RPM during a shift to establish a desired shift profile within the ECU. Another feature of the transmission is the ability to "learn" or "adapt." The electronic control system optimizes shift quality by using "Adaptive Shifting." A wide variety of varied shift conditions is required before optimizing shift quality. Generally, five typical shifts of a consistent shift type are needed to optimize shift quality.

Shift Selector

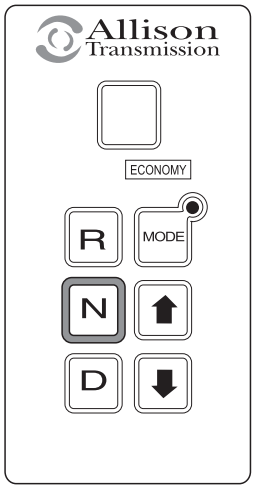

080355d

The keypads on the shift control are R (Reverse), N (Neutral), D (Drive), Arrow up, Arrow down, Mode button. A digital display window shows gear selection, various transmission modes, oil level and transmission fault codes.

An N (Neutral) should appear in the display window when the ignition is turned On. This indicates the transmission is in neutral and it is safe to start the engine. If the N does not display when the ignition is turned on, there is no power to the shift selector and the transmission will not allow the engine to start. No display is an indicator of electrical problems with the engine batteries, ECU or the shift selector.

Keypad Functions:

- Select the Reverse gear by pressing **R**.
- Select Neutral by pressing **N**. The area around the **N** button has a raised ridge so the driver can orient his hand to the push buttons by touch without looking at the display.
- Select Drive range by pressing **D**. The highest forward gear (6th gear) appears in the display and the transmission will shift to first gear.
- The **Up** and **Down** arrow buttons are used to select a higher (if not in "6") or lower (if not in "1") forward range. These buttons are not functional in Neutral or Reverse. When in Drive, one press changes the gear range selected by one. If the button is held continuously, the selected range will continue to change up or down until the button is released or until the highest/lowest possible range of gears is selected.
- The Mode button enables a secondary shift point to be selected. This is commonly referred to as Economy mode. Economy mode affects the upshift schedule 3-4, 4-5, 5-6 and downshift schedule 6-5, 5-4, 4-3. During highway driving, with the cruise control set between 55 and 65 m.p.h., setting the transmission to economy mode will eliminate about 99% of transmission downshifts from sixth to fifth when incurring a slight incline or overpass.

In city driving, with the transmission set to economy mode, the transmission will upshift approximately 200 RPM sooner using less fuel with reduced engine noise. Do not use economy mode while traveling in mountain terrain. The lower RPM shift schedule will reduce the flow of antifreeze, lubricating oil and airflow through the radiator, resulting in increased transmission and engine temperature.

- **To Enter Economy Mode:** Press the **Mode** button. The LED will illuminate.
- **To Exit Economy Mode:** Press the **Mode** button. The LED will extinguish.

CAUTION:
Do not use the economy mode in heavy stop and go traffic or mountainous terrains. Frequent shifting occurs when in economy mode while using heavy throttle, increasing transmission fluid temperature. Exit economy mode until road conditions improve.

NOTE:
The Mode button is used by the service technician to access diagnostic codes when troubleshooting. The diagnostic circuitry must be enabled to display.

- When traveling and the Auxiliary Braking device is used, the display changes to a default reading of 2 or 3. The transmission is not in second or third gear. This is only a reference for the transmission downshift points to optimize the engine braking effect.

CAUTION:
Engine temperature may rise when ascending long grades using full throttle. Towing a load will increase the demand on the engine. If this occurs, manually shift the transmission to the next lower gear and use less throttle. The engine will use less fuel and RPM should increase.

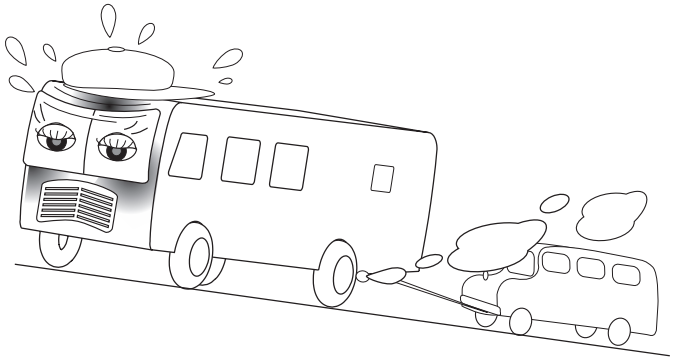

020168C

NOTE:
The transmission will not accept a manually selected gear change to occur if the gear selected is out of the specified operating range.

NOTE:
The transmission will not shift into gear from Neutral if the engine RPM is at or above 900. The display will flash "6" indicating the engine RPM is excessive. Select "N" and lower the engine RPM.

Check Trans Indicator

The electronic control system of the transmission is programmed to alert operator of a problem with the transmission system, and reacts automatically to protect the motorhome and transmission from damage. Normally, the Check Trans indicator will display when the ignition is turned on, which confirms the indicator is working. The indicator will go out after the engine has started. If the Check Trans indicator continues to display after start up, the transmission system should be checked immediately. Continued display of the Check Trans indicator during operation indicates the ECU has detected a fault and recorded a diagnostic code. The Check Trans warning is accompanied by a flashing display from the shift selector.

The shift selector display will show the actual range attained and the transmission will not respond to shift selector requests when the ECU detects a Do Not Shift (DNS) condition. Indications from the shift selector inform the operator that the transmission is operating at reduced capabilities. The transmission generally will downshift to 4th gear. The torque converter will not "lock-up" and engine speed is automatically reduced. Direction changes (i.e. forward to reverse) will not be allowed. This allows time to find a safe place to park the motorhome to prevent transmission damage. If the engine is shut off, then started after a Check Trans indication, the transmission remains in Neutral until the fault has been corrected. Service should be performed immediately in order to minimize potential damage to the transmission.

NOTE:
Contact an authorized Allison Transmission service center whenever a transmission related concern arises. For some problems, fault codes may be registered without the ECU activating the Check Trans indicator. An authorized Allison Transmission Service center will have the equipment to check diagnostic codes and correct problems that may arise.

Diagnostic Codes:

The shift selector can be used to display transmission malfunctions as numerical codes. Each code is a two-digit main code and a two-digit sub code. These codes will fall in two classes: active and inactive. Active codes are codes currently affecting the ECU process and transmission operation. Inactive codes are retained in memory but may not affect the ECU process or transmission operation. A service technician will activate Diagnostic mode or hook an electronic display (Pro-Link) to the data plug to retrieve diagnostic codes. A maximum of five codes, D1 to D5, may be listed at one time. The highest priority code will be listed in D1. The Mode button will enable selection of sequential codes.

To Display Diagnostic Codes:

- Stop the motorhome at a safe location.
- Apply the parking brake.
- Simultaneously press the up and down arrows once to enter oil level display mode. Then press the up and down arrows again to enter diagnostic mode.
- The codes will display one digit at a time.
- Press the mode button to scroll through the codes.
- Record all diagnostic codes that are displayed. The codes then can be used by an Allison Service Center for evaluation and repair.
- Inactive codes can be cleared by holding the Mode button for approximately three seconds. Some codes are self-clearing while others will require service or ignition on/off cycles to clear.

The Allison MH Series requires very little maintenance. Careful attention to the fluid level, electrical connections and hydraulic hoses is very important.

The transmission should be kept clean for easy inspection. Make periodic checks for loose bolts and leaking fluid. Check the condition of the electrical harnesses regularly. Check the engine cooling system occasionally for evidence of transmission fluid that would indicate a faulty oil cooler. Report any abnormal condition to an Allison Service Center.

Prevent Major Problems:

Help the WTEC III control system oversee the operation of the transmission. Minor problems can be kept from becoming major problems if an Allison Transmission Service center is notified when one of these conditions occur:

1. Shifting feels odd.
2. Transmission leaks fluid.
3. Unusual transmission-related sounds (sound made by normal engine thermostatic fan cycling when climbing a long grade with a heavy load are often mistaken for transmission-related sounds).
4. The Check Trans indicator comes on frequently.

TRANSMISSION LUBRICATING FLUID

Transmission performance, reliability and durability are dependent on the type of lubricating fluids used. From the factory, the transmission has been filled with TranSynd™ synthetic transmission fluid. TranSynd™ synthetic transmission fluid extends the service intervals. A small tag has been attached to the dipstick identifying that the transmission is filled with TranSynd™ synthetic transmission fluid. The dipstick/oil fill is located between the engine and transmission underneath the engine access door in the bedroom.

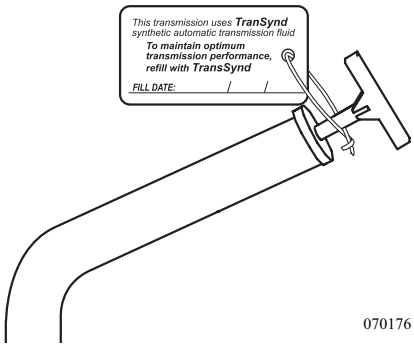

CAUTION:
Do not mix Dexron III® transmission fluid with TranSynd™ Synthetic transmission fluid.

Fluid and Internal Filters Change Interval:

Fluid and internal filters may require changing earlier depending on the severity of operating conditions. Fluid must also be changed whenever there is evidence of dirt or high temperature operation as indicated by discoloration, strong odor or fluid analysis. Local conditions, severity of operation or duty cycle will dictate more or less frequent service intervals.

INFORMATION:
Refer to the Allison transmission owner's manual or contact an authorized Allison service center for change intervals.

Fluid Levels - Cold Check

Transmission Oil Level Dipstick.

Cold Check - Manual Check Procedures:

The concept of a cold check is to determine adequate fluid level for safe operating until a hot check can be performed.

To Check the Fluid When Cold:

- Park the motorhome on a level surface. Set the parking brake.
- With the engine operating at a low idle, put the transmission in **N** (Neutral).
- Chock the wheels to prevent the motorhome from moving.
- Allow the engine to run at idle (500-800 RPM) for one minute.
- Apply the service brakes and shift to **D** (Drive), then to **N** (Neutral) and next to **R** (Reverse) to fill the system. Finally shift to **N** (Neutral) and release the service brakes. Allow the engine to continue to run at idle (500-800 RPM).
- Remove the dipstick and wipe clean. Reinsert the dipstick fully into the tube, then remove to check fluid level. Repeat, to verify reading if needed.
- Safe operating level is anywhere within the **COLD CHECK** band on the dipstick. The fluid level is sufficient enough to operate until a **HOT CHECK** can be performed.
- If the level is not within this band, add or drain the fluid as necessary to put the level to the middle of the **COLD CHECK** band.
- Perform the **HOT CHECK** at the first opportunity after reaching normal operating temperatures (160º - 200º F/71º - 93º C).

CAUTION:
Low or high fluid level can cause overheating and irregular shift patterns. These conditions can damage the transmission if not corrected.

- Fluid level rises as temperature increases. Fluid must be hot to ensure an accurate check.
- Be sure fluid has reached normal operating temperature (160º - 200º F/71º - 93º C). If a transmission temperature gauge is not present, check the fluid level when the engine water temperature gauge has stabilized and the transmission has been operated under the load for at least one hour.
- Park the motorhome on a level surface and shift to **N** (Neutral). Apply the parking brake and allow the engine to idle (500 - 800 RPM).
- After wiping the dipstick clean, check the fluid level. Safe operating level is anywhere within the **HOT RUN** band on the dipstick.
- The width of the **HOT RUN** band is approximately one quart of fluid at normal temperature range.
- If the level is not within this band, add or drain the fluid as necessary to put the level within the **HOT RUN** band.
- Ensure that fluid level checks are consistent. Check the level more than once. If readings are not consistent, ensure the transmission breather is clean and not clogged. If readings are still not consistent, contact the nearest Allison distributor or dealer.

FUEL SYSTEM
Fuel Requirements

Low sulfur #2 diesel fuel or #1 and #2 commercial winter blend diesel fuels are the most common commercially available and recommended for use.

The use of #2 diesel fuel will result in optimum engine performance. Try to obtain fuel from sources that are serviced often such as large truck service facilities. The fuel supply is fresh and the possibility of introducing contaminants or water into the fuel system is reduced. It is important to not empty the engine of fuel. The fuel system on the engine is sensitive to air. If the engine is allowed to run out of fuel, the fuel system will need to be thoroughly primed before the engine will start. Refer to the *Fuel Filters* article for priming instructions.

WARNING:
Do not mix gasohol with diesel fuel. This mixture can cause an explosion.

NOTE:
If the engine has run out of fuel it will need to be primed. Refer to Fuel Filters for instructions on priming the fuel system.

NOTE:
Due to the precise tolerances of diesel injection systems, it is extremely important that fuel be kept clean and free of dirt or water. Dirt or water in the system can cause severe damage to both the fuel pump and the fuel injectors. Fuel additives for lubricity are not recommended. There are numerous diesel fuel additives to help remove moisture from fuel, prevent microbe growth and to prevent gelling during cold weather. Before adding any type of fuel additive or extender, consult the Manufacturer's Owner's Manual.

Fuel Tank

The diesel fuel tank is made of aluminum. Pick-up and return lines are placed at opposite ends of the tank inhibiting fuel aeration. The engine pickup tube is cut at a 45° angle to allow optimum flow to the engine. The generator and Aqua-Hot intake tubes are set to approximately ¼ of a tank. This will prevent depleting the fuel supply while dry camping.

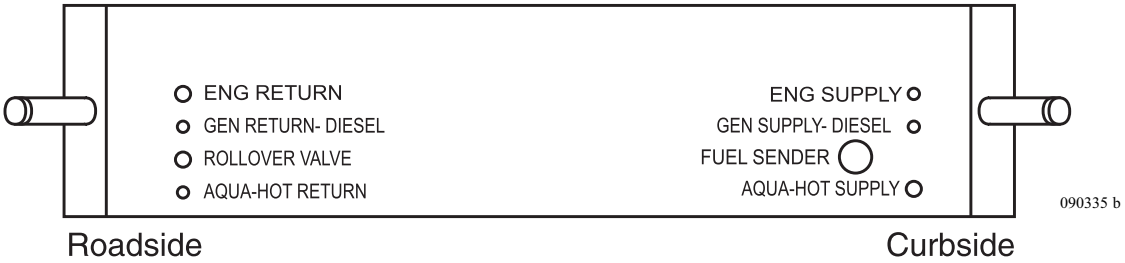

Fuel Sending Unit

The bottom of the tank is made in a “V” configuration allowing the engine pick-up tube access to almost all available fuel in the tank. Internal baffles slow fuel slosh. A check valve placed at the bottom of the baffle, at the end of the tank with the pick-up tube, prevents fuel starvation through long corners when fuel supply is low.

NOTE:
Fill the fuel tank if the motorhome is going to be stored for any length of time to reduce the amount of potential condensation. After storage, check the vent tube for blockage. It is not uncommon for insects to plug the vent tube. If pressure or vacuum exists when the fuel cap is removed, the vent tube may be blocked. The end of the vent tube is located on the curbside of the fuel tank, near the bottom.

Fuel Sender

The "Centroid" fuel sender has no moving parts and works by measuring capacitance (electrical property) between its inner and outer tubes in the tank. The more fuel between the tubes, the higher the reading. Electronics in the "hockey-puck" head of the sender convert the capacitance to current to drive the fuel gauge.

Connections:
The "Centroid" sender has four connections:

1 & 2 - Positive (POS) and Negative (NEG): Battery voltage to run the electronics in the sender head.

3 - SEND: Connects to the SEND terminal of the gauge on the dash.

4 - ALARM: Makes a connection internally to the negative (NEG) terminal when the low fuel alarm level is reached (when the fuel gauge is reading about 1/8 tank). This turns on the fuel indicator on the liquid crystal display on the speedometer and is not adjustable.

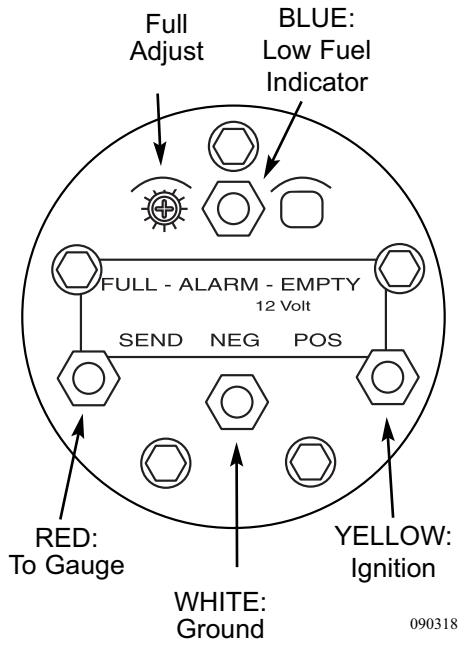

Fuel Sending Unit.

Adjustments:
The "Centroid" sender has two adjustments:
1 - EMPTY: Adjusts for length of sender. It has been set at the factory, covered with a sealant and should not be changed.

2 - Full Adjustment (FULL): The full adjustment can be used to correct for slight differences between fuel meters. During installation, it has been factory calibrated and should not need re-adjustment.

The correct adjustment technique, with a full tank of fuel, is to start with the full adjustment screw completely clockwise. This should cause the reading to be above full. Adjust slowly, rotate counterclockwise, until the full mark on the gauge is reached. The intent is to always adjust downscale rather than upscale.

Troubleshooting:
A. Electronic Output: The sender has a transistorized output to prevent an ohmmeter from getting a correct reading of its output resistance.

B. Fuel Only: The sender will not work correctly in conducting fluids such as water (it will read above full all the time in water). One possibility is that when there is a constant above-full reading there may be water in the bottom of the fuel tank.

C. Contact Centroid: Probably 90% of the return Centroid tests work okay on the bench. If you have incorrect readings contact Centroid (**telephone: 800-423-3574,** or preferably, **fax: 386-423-3709**) with the symptoms. A short,"fill in the blanks" troubleshooting test is provided to test the sender. It is easier to find the problem that way than after the sender has been removed from the system, since the problem is not necessarily with the sender.

Fuel Lines & Hoses

Make a visual check for fuel leaks at all engine-mounted fuel lines, connections and at the fuel tank pick-up and return lines. Leaks in this area may best be detected by checking for accumulation of fuel under the tank. Engine performance and auxiliary equipment is dependent upon the ability of flexible hoses to transfer lubricating oil, air, coolant and fuel. Maintenance of hoses is an important step in ensuring efficient, economical and safe operation of the engine and related equipment.

INSPECTION:
Check hoses daily as part of the pre-start inspection. Examine hoses for leaks. Check all fittings, clamps and ties. Make sure the hoses are not touching shafts, couplings or heated surfaces, including exhaust manifolds, sharp edges or other obvious hazardous areas. Over time, vibration from the engine and road can move or fatigue clamps and ties. To ensure continued proper support, inspect fasteners frequently and tighten or replace them as necessary.

Fuel Filters

Three filters are used for the engine: pre-filter, primary and secondary filter. The reusable pre-filter and the primary filter are located in the engine compartment. The secondary filter is located on the engine. Prime the fuel system when filters are changed or if the engine has run out of fuel.

Filter Maintenance Intervals:
- Change the primary fuel/water separator filter every six months or every 15,000 miles.
- Refer to the ***Manufacturers Guide*** for service intervals of the secondary fuel filter.

NOTE:
It is recommended to wear gloves and old clothing when working with diesel fuel. Avoid getting fuel in the interior of the motorhome.

Primary Filter System:
The primary filter system filters the fuel, detects water that may be present in the fuel supply and is also used to prime the fuel system. The fuel goes through the reusable pre-filter before entering the primary filter.

When changing the filter, a suitable container is required to catch the waste fuel. Properly dispose of waste fuel. **Do not reuse fuel** and risk introducing contaminants into the system.

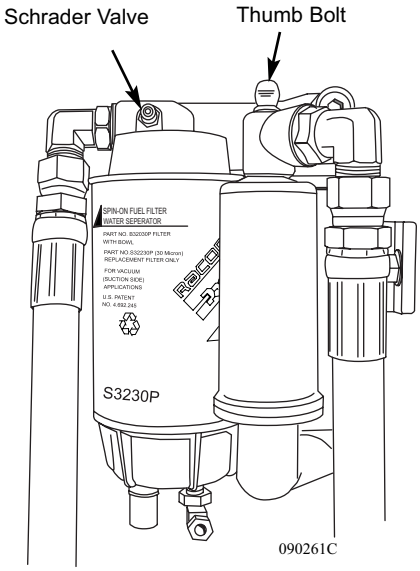

1. Remove the thumb bolt, washer and top housing. Remove the bowl, pre-filter and O-rings.
2. Wear safety goggles. Clean the pre-filter and bowl in a solvent bath, or using compressed air.
3. Inspect the O-rings for cuts or damage. Replace if needed.
4. Lube O-rings with motor oil or clean fuel.
5. Install pre-filter onto bottom block. Install bowl with arrow pointing down. Replace the top housing, confirming that the O-rings are properly seated.
6. Replace thumb bolt and tighten by hand. Using pliers, turn the bolt three-quarter turn to firmly seat the O-ring seals.
7. Remove bottom discharge line and primary filter. Drain fuel from filter into container.
8. Lube O-ring on new filter with motor oil or clean fuel. It is not necessary to fill the filter with fuel.
9. Install filter onto housing. Tighten an additional three-quarter to one full turn after seat contacts base. Install discharge line to bottom of filter.

<u>NOTE:</u>
Over tightening may result in damage to the unit.

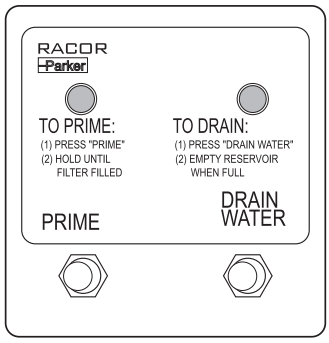

Control Panel 090261B

To Prime the Fuel System:

1. Turn the ignition key on. Do not attempt to start the engine.
2. Remove the dust cap from the Schrader valve. Press and hold the Prime button while holding the Schrader valve open with finger or object. Hold Prime button until filter is full. Stand clear as fuel may spray from Schrader valve.
3. After the fuel purges from Schrader valve, release the valve. Continue to hold the Prime button one additional minute. This should allow the engine to start.
4. Install the dust cap to the Schrader valve. Start and operate the engine at high idle for about three minutes. If the engine fails to readily start, initiate one or two additional purge cycles.

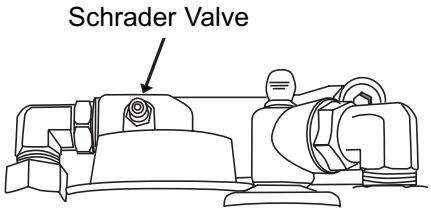

090261d

<u>NOTE:</u>
The engine may run rough for a short period until all remaining air is forced through the fuel system.

<u>NOTE:</u>
It is normal for the pre-filter bowl not to be full of fuel while the engine is running.

Water in Fuel (H^2O) Light:

If the **Water in Fuel** light illuminates on the dash, the primary filter has detected water in the fuel. Do Not continue engine operation as fuel contaminated with water can damage fuel injectors. Water is heavier than fuel. A discharge line is located at the bottom of the primary filter. Purge water from the filter using the **H2O purge** button on the filter control panel. Contaminated fuel will purge from the bottom of the filter into a holding bottle located below the engine on the curbside.

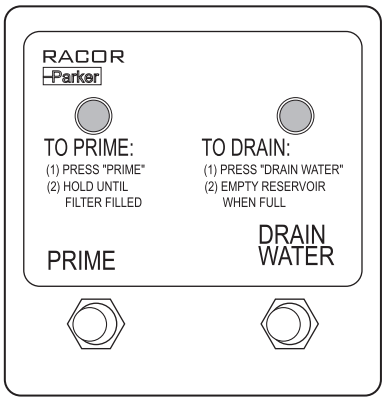

090261b

To Remove Water from the Filter:

1. Turn the ignition key **on**. Do not start the engine. The drain indicator lamp on the filter control panel should illuminate when the **Drain** button is pressed. The electronics in the control panel will not allow the system to drain if the system has not detected water.
2. Press and hold the **Drain** button. The system will purge water from the filter into the storage container located in the curbside engine compartment. Change the fuel filter at the earliest convenience. Empty the storage container at the same time.

NOTE:
The Drain Water function will operate only when water is detected in the primary fuel filter.

NOTE:
Always carry an extra Racor element as one tank full of excessively contaminated diesel fuel can plug a filter.

Rear Start Switches

The rear start switches are for safety and convenience. The front/rear switch has three positions:

1. FRONT - Motorhome will only start with the ignition key.
2. REAR - Motorhome can only be started with the rear start switch.

NOTE:
The Ignition switch must also be in the "on" position.

3. OFF - Starter will not engage with either ignition key or rear start switch. It will also turn the engine off if it is already running.

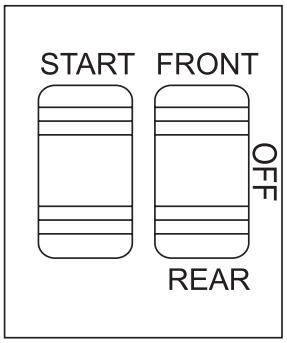

090373h

The **Start** switch engages the starter when the front/rear switch is set to **Rear** and the ignition switch is **on**.

The motorhome uses an engine driven hydraulic pump to operate both the power steering and engine hydraulic cooling fan systems, sharing one common reservoir. The hydraulic fluid used is an automatic transmission fluid (*Dexron III®*) which has a wide ambient temperature operating range.

CAUTION:
If ambient temperatures approach 0º F, Pennzoil Arctic Blue hydraulic fluid, or equivalent hydraulic fluid, should be used. Using incorrect hydraulic system fluid weights in cold temperatures will raise the hydraulic system operating pressure and may damage the hydraulic cooler.

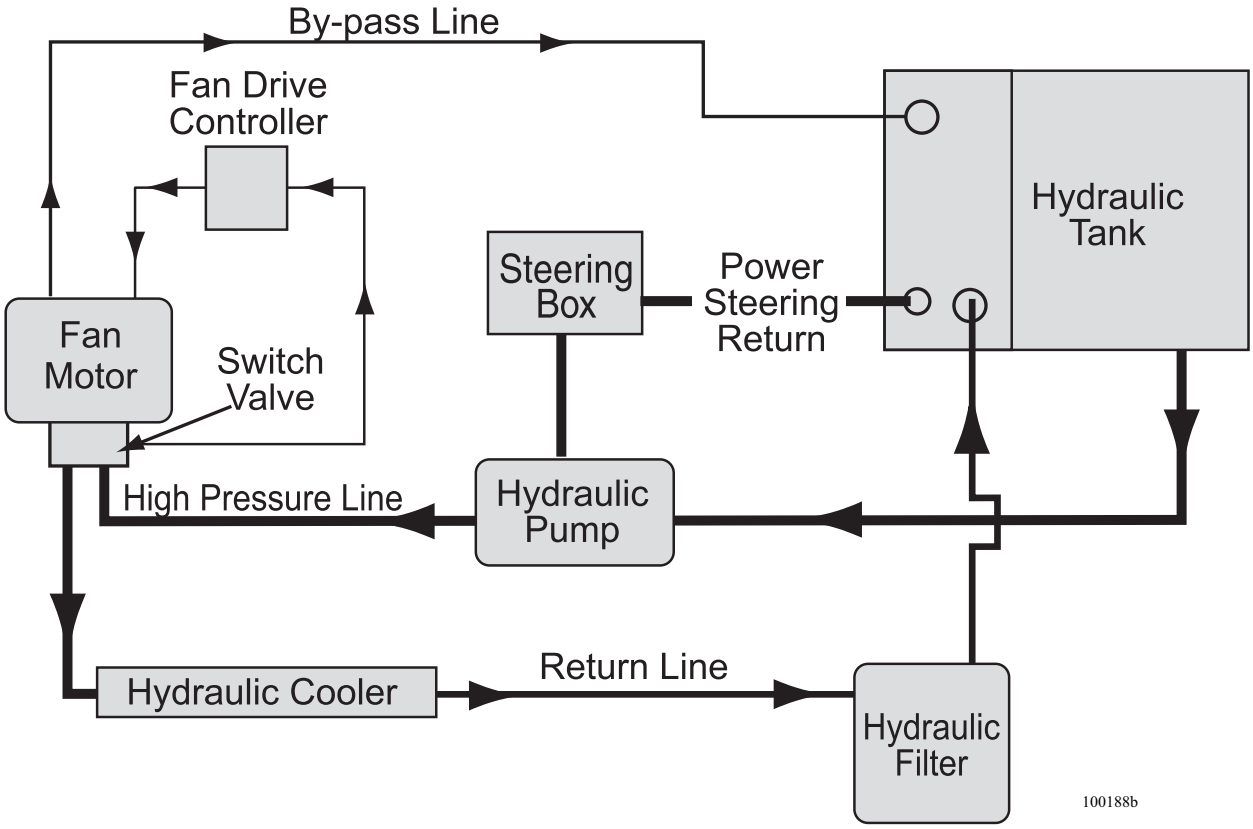

Typical System: May vary with engine type.

Hydraulic Pump

The hydraulic pump creates pressure by meshing sets of gears together inside a close tolerance housing. A filtered supply of hydraulic fluid from the hydraulic reservoir enters the intake side of the pump. The meshing gear assembly "squeezes" the oil through the pump to the output side delivering pressurized fluid to the switching valve mounted on the hydraulic fan motor. The ISM engine uses a two-part hydraulic pump assembly. One side of the pump drives the hydraulic fan motor; the other side is used for the power steering. The ISX and Series 60 engines uses a transmission-mounted hydraulic pump for the fan motor. The power steering pump is mounted behind the compressor on the ISX, and directly to the accessory drive on the Series 60. Each pump type is equipped with internal by-pass pressure relief valves. If hydraulic pressure should exceed specification, the internal by-pass valve will force open to lower fluid pressure and maintain a specified rating. Hydraulic pressure is generally not rated in psi but in the term Bar. One bar is equivalent to approximately 14.5 psi. Hydraulic pressures with a system at no load may be as low as eight bars on the output side of the pump. When a load is placed on the hydraulic pump, such as fan speed ramping up, hydraulic fluid flow slows from hydraulic fluid restriction and pressure increases.

This may be understood as a faucet with a garden hose attached. Crimping the hose with the faucet on will create pressure from the restriction. This principle applies to the hydraulic system. The hydraulic pump is the supply; the load is the hydraulic fan motor. Hydraulic system pressure at full load can exceed 130 bar or 2000 psi. Hydraulic system pressure falls dramatically after the load. The return line pressure may be as low as six to eight bars. The fluid enters the hydraulic cooler where the heat is dissipated.

Hydraulic Pump (Series 60 & ISX):

The hydraulic pump is driven by a separate gear assembly mounted to the transmission called a PTO (power take-off). The intermediate shaft and coupling between the PTO and the hydraulic pump are lubricated by transmission fluid. No maintenance is required.

Hydraulic Cooler

The hydraulic cooler operates to prevent hydraulic fluid from overheating. When a load is placed on the hydraulic system, heat is created in the fluid. Heat must be dissipated to prevent the hydraulic fluid from overheating and breaking down. After cooling, the fluid is filtered before returning to the reservoir.

Care must be used when starting an engine in very cold climates. As with any oil, lower temperatures thicken the oil. Hydraulic system pressure increases due to the viscosity of the fluid. Although the hydraulic pump is equipped with pressure relief valves, the thick oil on the return line can exceed the operating pressure of the hydraulic cooler.

Hydraulic Fan System

The hydraulic fan drive system cools the radiator, charge air cooler, hydraulic fluid cooler, transmission cooler and the dash air conditioning condenser. The components of the hydraulic fan system are: hydraulic reservoir, filter, pump, hydraulic fan motor, hydraulic switching valve and thermovalve. Cooling fan speed is proportional to engine speed and coolant temperature. When coolant temperature rises above 185º F, the thermovalve slowly closes off the bypassing hydraulic fluid from the switching valve. As coolant temperature rises, a spool valve begins to move in the switching valve. The spool valve directs the pressurized hydraulic fluid to the fan motor. The higher the coolant temperature, the further the spool valve is moved in the switching valve, providing a higher volume of pressurized hydraulic fluid to the fan motor. Fan motor speed is increased to meet the demand for cooling. The action of the thermovalve is designed to move the spool in the switching valve to ramp up fan motor speed. This design saves horsepower and increases fuel mileage by precise control of hydraulic fan motor speed. The fan motor will increase in speed when the motorhome is ascending long hills or operating in high ambient temperatures. It is normal for the fan to "roar" when it is operating. Fan motor speed and engine RPM are approximately the same with the switching valve at full engagement.

Thermovalve (ISM & Series 60 Engines)

The wax filled thermovalve, mounted at the top of the radiator, controls the action of the switching valve. When the radiator is cool, hydraulic fluid is allowed to flow through the inlet and outlet ports of the thermovalve and return to the hydraulic reservoir. As coolant temperature inside the radiator rises to approximately 185º F, wax inside the thermovalve begins to melt and expand, which restricts hydraulic fluid flow through the thermovalve. The restricted hydraulic fluid pressure then begins to move the internal spool valve of the switching valve. This process will continue until coolant temperature inside the radiator reaches approximately 199º F. At this temperature, hydraulic fluid flow through the thermovalve is stopped, moving the spool valve to full open position.

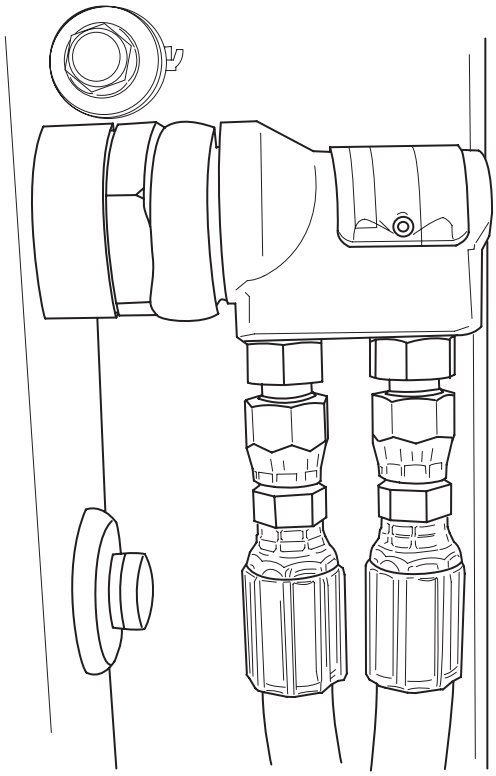

090473

Electric Thermovalve (ISX Engine)

The ISX engine uses an electric thermovalve to monitor two thermal sensors. One sensor is located in the charge air pipe between the charge air cooler and intake manifold. If the intake air charge temperature becomes too high, the hydraulic fan will engage to cool the charge air cooler. The other temperature sensor monitors engine coolant. As coolant temperature increases, hydraulic fan speed will commensurate with engine temperature. This method will use engine power sparingly to operate the fan and keep the engine at the correct operating temperature.

Switching Valve

The switching valve is mounted to the fan motor and controls direction of high pressure hydraulic fluid flow. High pressure hydraulic fluid comes from the hydraulic pump to the switching valve before returning to the reservoir. Either the thermovalve or the electric override valve directs the fluid to the spool in the switching valve. When the radiator is cool, pressurized hydraulic fluid will bypass the fan motor and return to the fluid reservoir. As radiator temperature rises, the thermovalve signal is slowed or stopped to the switching valve. High pressure fluid is then directed to the fan motor, cooling the radiator.

Electric Override (ISM only)

Motorhomes are equipped with an electric over hydraulic override control valve, located at the lower rear corner of the radiator package. This valve is normally closed and is plumbed parallel with the thermovalve and performs the same hydraulic signal function as the thermovalve, but electrically controlled by the engine computer.

The engine computer monitors intake manifold temperature. The electronics of the engine control a relay located in the rear run box. When intake manifold operating temperature is normal, the electronic engine will energize the coil of the relay. This energizes the coil of the override valve and the hydraulic fluid signal flows through the override valve to the thermovalve. If the engine electronics detect an over temperature condition of the intake manifold, the coil of the 87a relay is deactivated. Power to the override valve is removed, hydraulic fluid flow signal is stopped and internal spool of the switching valve moves to full open position. The high pressure fluid is directed to fan motor cooling the radiator.

Fan Motor

The fan motor is driven by hydraulic fluid pressure from the switching valve. The fan motor works on the same mechanical principle as a hydraulic pump, only in reverse. Instead of creating hydraulic pressure by meshing gears together in a close tolerance housing, the fan motor receives hydraulic pressure. The hydraulic fluid drives the fan motor's internal gear assembly, spinning the fan motor and attached fan blades.

The switching valve is mounted to the fan motor. The hydraulic fluid is then cooled and filtered before returning to the reservoir.

Hydraulic Filter

The hydraulic system filter, located in the engine compartment, has special features to protect the precision tolerance hydraulic components. The filter head assembly has a built in sight gauge that indicates fluid flow through the filter. A specially designed media filter absorbs harmful contaminants such as moisture and dirt. When the engine is running, use the sight gauge to check the filtering process.

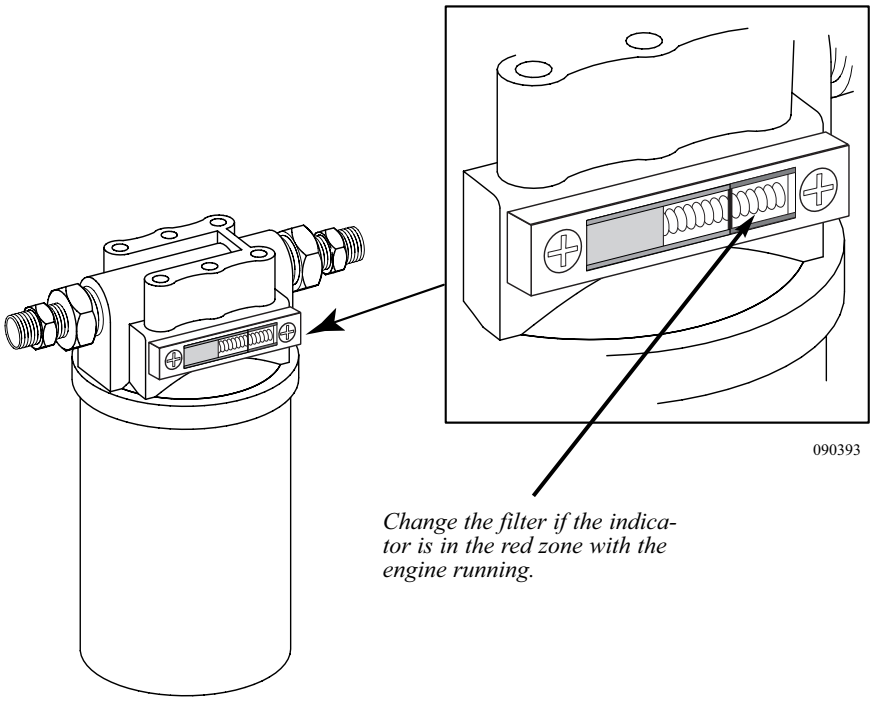

Change the filter if the indicator is in the red zone with the engine running.

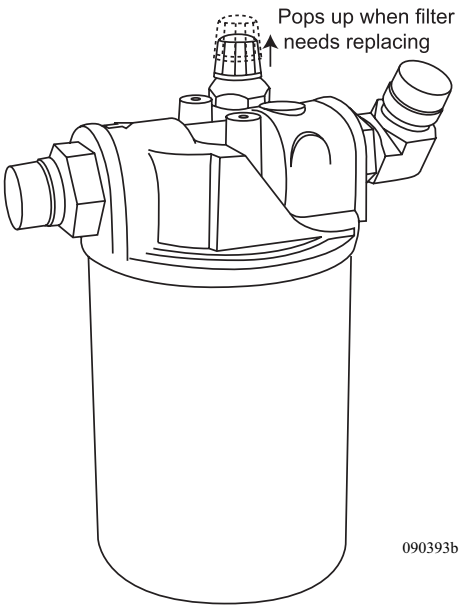

Starting with unit number 604473.

The **green** zone indicates that hydraulic fluid is properly filtered and flowing unrestricted through the filter and head assembly back to the reservoir. As the filter traps harmful debris and contaminants, the indicator will move into the **red** zone.

When the indicator is in the **red** zone, it is indicating filter is clogged and fluid is bypassing the element to return to the reservoir. The filter head is equipped with a built in bypass valve to prevent a clogged filter from developing a leak due to excess hydraulic fluid pressure inside a clogged filter.

The filter is rated at ten micron*. Change the filter before the built in sight gauge is operating in the **red** zone. This will ensure the hydraulic fluid is properly filtered.

Filter number: Parker IN HC 5720 (ten micron)
***One micron is one millionth of one meter.**

Hydraulic Reservoir

The hydraulic reservoir, located in the engine compartment, is made from aluminum so the tank will not be affected by moisture that may condense. The oil level in the reservoir should be checked when the hydraulic fluid is at operating temperature. This should be done every 6,000 miles or three months. The oil dipstick/oil fill is located on top of the reservoir. The oil level should be kept between the full and add marks on the dipstick. When performing fluid level checks, inspect fittings and hoses for signs of leakage. Look underneath the motorhome for signs of fluid leakage. Avoid untimely and costly failures by having leaks repaired. Change the hydraulic oil filter every 15,000 miles or once a year.

NOTE:
Use *Dexron III*® transmission fluid when adding oil.

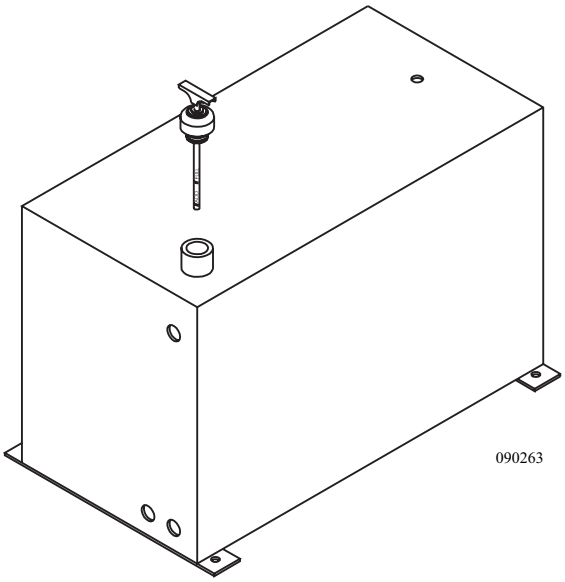

Steering/Fan Reservoir

The entire air filter cartridge is discarded and replaced by loosening the inlet and outlet ducting clamps and releasing the retaining band snaps. The air filter is located in the rear engine compartment.

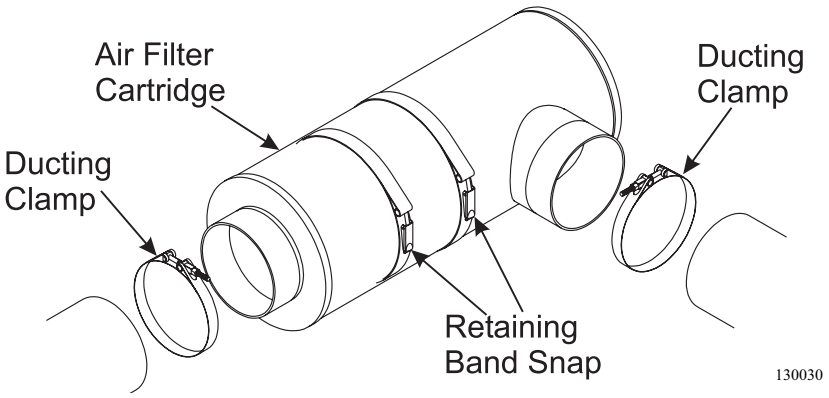

Air Filter Minder

The air filter minder is a precision overflow restriction gauge designed to take the guesswork out of air cleaner replacement.

The air filter minder is located in the rear engine compartment. As dirt captured by filter cartridge slowly builds up, vacuum between the filter and charge air cooler increases. The indicator locks at the point of maximum restriction so readings can be taken with or without the engine running.

When the desired change-out point is reached, the air filter should be replaced and the service indicator reset by pushing the **Reset** button on the top of the minder.

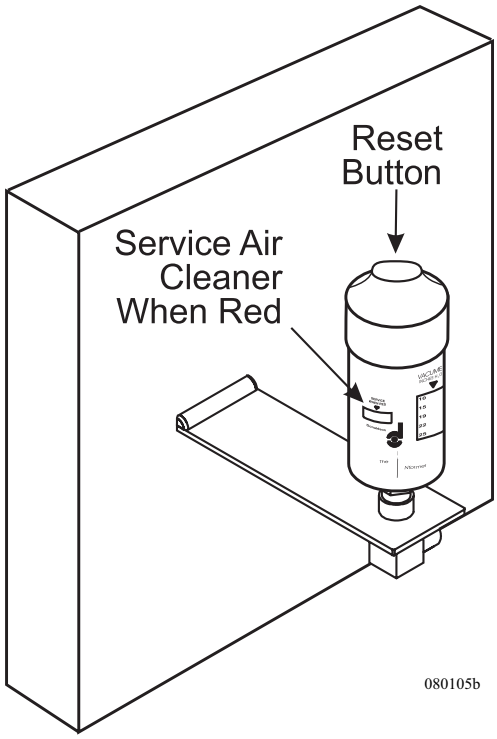

EGR FILTER (Detroit Only)

The PuraGuard filter is used to remove oil from the air supply for the EGR valve system. Oil in pneumatic valves can cause the valves to operate sluggishly, or not at all. Removing oil from the air supply for the EGR system helps to ensure longevity of the valves. **The filter should be drained monthly and replaced annually.** When performing maintenance, always dispose of drainage and filters properly.

CAUTION:
Discharge air system before removing filter.

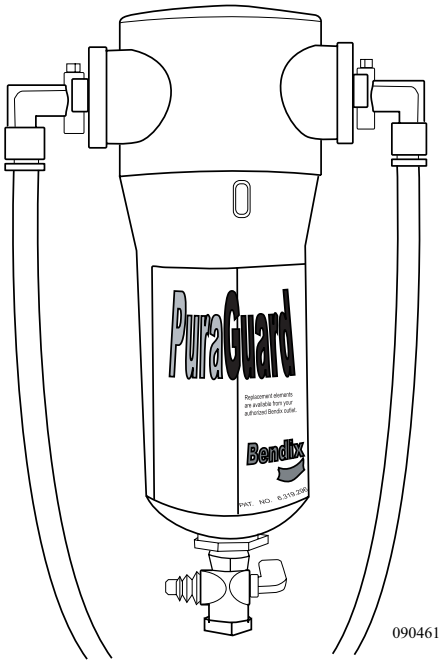

EGR Filter located in the engine compartment.

LUBRICATION MAINTENANCE

Performing regular scheduled maintenance ensures reliable operation and optimum service life of the various chassis components. Completed maintenance brings peace of mind knowing the various components have received proper service. Failure to follow maintenance guidelines, or perform scheduled maintenance, results in inefficient operation, premature component wear or component failure resulting in breakdown.

Maintenance schedules are usually performed at certain mile or time intervals. When performing high level procedures, lower level service should also be performed.

NOTE:
Maintenance schedules are based on normal operating conditions and use. Operating under unusual or adverse condition shortens service intervals.

NOTE:
Engine and transmission service intervals are listed in their respective manuals.

Proper Lubricant Waste Disposal:

When performing service maintenance on the engine, transmission or rear axle, waste fluids and filters should be properly disposed of or recycled. Package used oils, antifreeze and other fluids in sealed containers. In many cases used oil is accepted free of charge at county disposal sites. Waste fluids are toxic to pets and other animals. Waste fluids should not be left in open containers. The sweet odor of antifreeze is attractive to pets, but highly toxic.

CAUTION:
Properly dispose of used antifreeze and waste oil. Animals like the sweet odor of antifreeze and may ingest it if left in open containers. Wipe up any fluid spills. Pets may lie in puddles of fluid, many of which are irritants and can cause severe chemical burns if not properly washed.

Lubricant Classification:

Lubricants are manufactured in many forms for a variety of applications. There are many different oil and grease consistencies each with a designed application. To properly select a particular type of lubricant for a specific application, the component must be evaluated. Component stress loads, ambient temperature, working temperature and environmental exposure are just a few of the variables to consider. Select the proper lubricant for its intended application. As an example: selecting high viscosity grease to lubricate a lock cylinder results in sluggish lock cylinder operation especially in a cool environment. Conversely, using graphite to lubricate a component that is under extreme temperature and load will result in component failure.

Grease ratings and their base compounds are especially important when selecting a lubricant type for an intended application. Some grease compounds are manufactured for multi-use application. These are acceptable if the grease rating is in accordance with the manufacturer's recommended lubricant type and rating.

Lubricants:

Many chassis components require lubrication. The types of lubricants used will vary with the application of the component. A component may fail prematurely due to lack of lubrication or from using an incorrect lubricant type. The component manufacturer usually recommends a particular type of lubricant with a minimum approval rating. Most lubricants are tested under strict guidelines set by the ASTM (American Society for Testing and Materials). The NLGI (National Lubricating Grease Institute) helps disperse information to the grease production industry. Grease containers usually have an approval rating by the SAE (Society of Automotive Engineers), Mil Spec (Military Specification), API (American Petroleum Institute) or by other recognized and accepted organizations. The correct lubricant type with an approved specific rating must be used whenever applying, changing or adding any lubricant. When purchasing lubricants for a specific application be sure the label affirms the type of lubricant required with the tested rating by the term "meets or exceeds" in accordance with the manufacturer specifications.

Lubricating greases are made from different base compounds giving the grease different lubricating consistencies, properties and maximum operating temperatures. Most containers list the base compound and maximum operating temperature usually listed as melting point or drip point. Lubricating components, such as brake component for example, require a high temperature special base compound grease. Lubricating this type of component with other than specified grease type will result in inadequate lubricating qualities resulting in component malfunction or failure.

INSPECTION:
When performing any scheduled maintenance, inspect the area around where you are working. For example, changing the oil, look at the rear differential. Inspect for visual signs of fluid leaks.

Most fluids and lubricants have a distinct odor, which can be used to detect early signs of trouble. Generally, odors are most detectable soon after parking. Unusual sounds are another method of detecting a problem early. There are many types of sounds that are normal, such as the cyclic purging of the air dryer. Become familiar with the different sounds. If something sounds odd, smells peculiar or looks unusual investigate the situation.

Greasing:

Thoroughly clean all Zerk grease fittings before applying new lubricant. Keep paper towels or disposable rags handy when greasing. When lubricating items such as drive shafts and steer axle components, continued grease application is generally required until new grease appears at exit points.

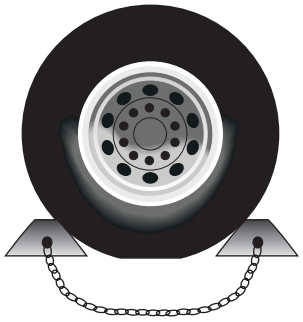

Some items use sealed boots around the component to prevent moisture intrusion. When greasing these types of components, care must be given to prevent excess lubricant pressure from rupturing the seal.

WARNING:
Always chock wheels before going underneath the motorhome.

Brake actuating components require lubrication to keep the actuating components freely operating. Avoid contaminating brake linings with lubricant. Particular care and attention to details should be taken when lubricating brake actuating components. Wheel removal may be necessary to gain access the grease fittings.

To apply grease:

- Clean the grease fitting. Initially operate grease gun until new lubricant discharges from nozzle, then wipe nozzle clean to avoid introducing contaminants into the component.
- Snap nozzle onto grease fitting.
- Nozzle must remain in line with the grease fitting during the application process. If the nozzle is not in line, lubricant will collect around nozzle and grease fitting, failing to lubricate the component.
- Wrap the nozzle with a paper towel or rag to prevent contamination and accidental soiling of other areas.

If the component does not accept grease the Zerk fitting may be plugged or damaged. Zerk fittings are replaceable and generally available at most auto supply stores. Zerk fittings come in a variety of angles depending on the application. Every effort should be made to lubricate the component, as neglect will only result in premature component failure.

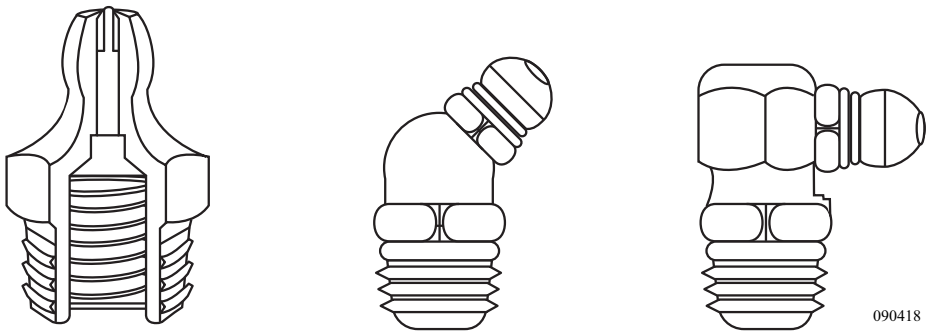

Typical Zerk Fitting.

NOTE:
Some grease fittings may not be accessible until the steering wheel is turned or the motorhome is moved slightly.

LUBRICATION CHARTS
Cummins - ISM

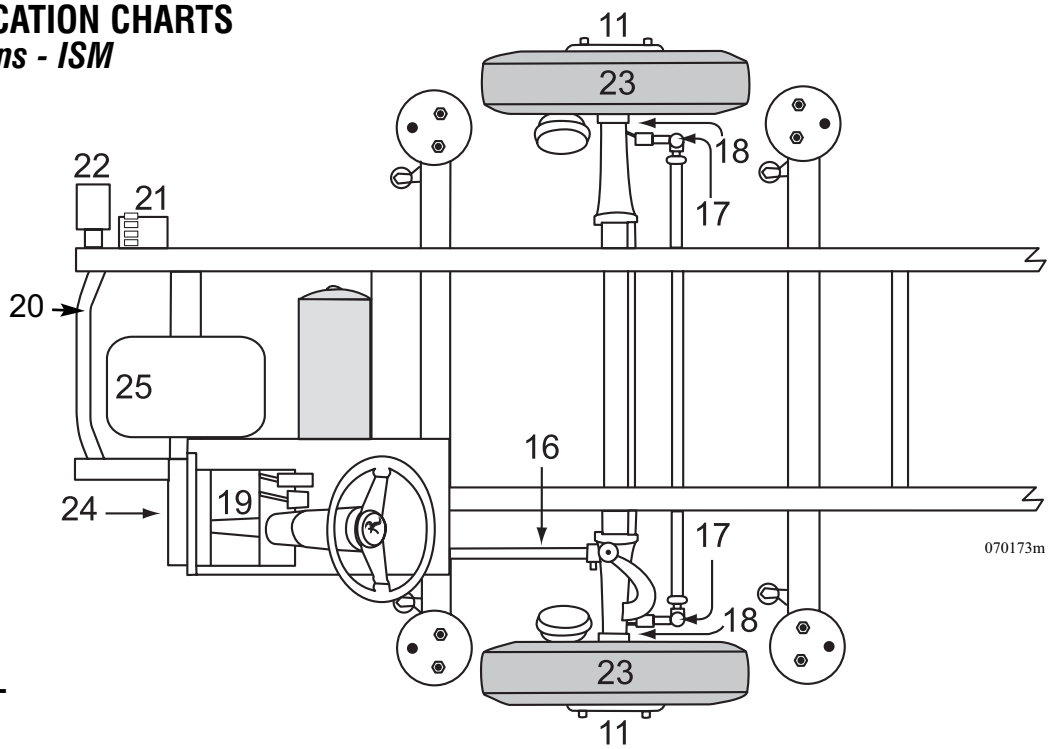

FRONT

Component:	Action:	When:	Code - Refer to Chart:
1. Engine Oil Fill	Keep to Full Mark	Before Each Trip + Daily Enroute	EO
2. Engine Oil Filter	Replace	At Oil Change	OEM
3. Transmission	Keep to Full Mark	Refer to OEM Manual	TS
4. Engine Coolant Reservoir	Replace	Refer to OEM Manual	AF
5. Hydraulic Fluid Reservoir	Keep to Full Mark	Monthly	TF
6. Hydraulic Filter	Replace	15,000 or Annually	TF
7a. Filter Fuel/Water Separator (Primary)	Replace	15,000 or 6 Months	FF
7b. Filter Fuel (Secondary)	Replace	Refer to OEM Manual	OEM
8. Air Dryer Filter	Replace	2 -3 Years	-
9. Radiator/Charge Air Cooler	Inspect	Weekly	-
10. Coolant Filter	Replace	Refer to OEM Manual	OEM
11. Wheel Bearings	Re-pack	30,000 or Annually	HT
12. Rear Differential	To Filler Plug	250,000 or 3 Years	MP
13. Slack Adjusters/S-Cams	Grease-3 Fittings ea.	10,000 or 3 Months	CBL
14. Drive Shaft Universal Joints	Grease-2 Fittings	10,000 or Annually	CL
15. Drive Shaft Slip Yoke	Grease-1 Fitting	10,000 or Annually	CL
16. Drag Link	Grease-2 Fitting	5,000 or 6 Months	CL
17. Center Link	Grease-2 Fittings	5,000 or 6 Months	CL
18. Spindles/Kingpins	Grease-2 Fittings ea.	5,000 or 6 Months	CL
19. Steering Intermediate Shaft	Grease-3 Fittings	30,000 or Annually	CL-4
20. Air Tank Drains	Drains	Monthly	-
21. HWH Reservoir	Keep to Full Mark	6,000 or 3 Months	TF
22. RVA Reservoir	Keep to Full Mark	6,000 or 3 Months	TF
23. Tire Pressure	Check	Before Each Trip + Daily Enroute	-
24. Steering Box	Grease-1 Fitting	Twice a Year	CL
25. Generator	Refer to Service Manual	Refer to OEM Manual	OEM
26. Batteries	Inspect	Bi-Monthly	DW
	Apply	10,000 or Quarterly	P

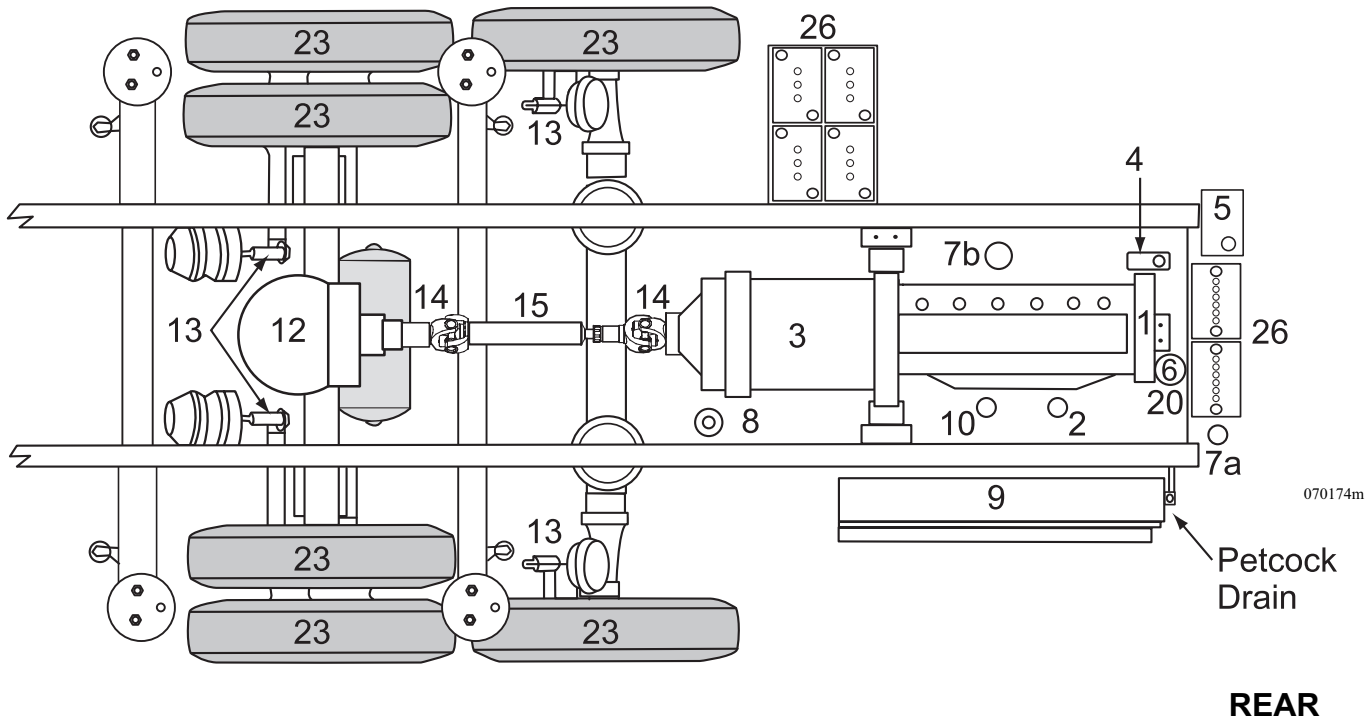

Lubrication Code Chart:

CL-4	U-Joints located inside coach under steering cover.
EO	Engine oil as recommended by engine manufacturer.
OEM	Refer to the Original Equipment Manufacturer's manual.
MP	API GL-5 or MT-1 type gear lubricant - Pennzoil Gear Plus SUPER-EW 75W-90, Synthetic.
GO	EP-SAE 90 gear oil.
CL	Chassis lubricant should be a high quality non corrosive multi-purpose lithium soap base lubricant that is water resistant and designed to withstand extremely high operating temperatures.
TF	Transmission fluid. Use *Dexron III*® transmission fluid only.
AF	Antifreeze as recommended by engine manufacturer.
BF	Dot-3 Brake fluid.
FF	Fuel Filter.
CBL	Clay-based Lubricant.
HT	High Temperature Bearing Grease
TS	TranSynd™
DW	Distilled Water
P	Petroleum Jelly

<u>NOTE:</u>
Service must be performed every twelve (12) months, regardless of actual mileage, to protect seals, bearings and gaskets from drying out and failing. The motorhome must be started and driven for at least 20 miles bi-monthly. It is important to remember the generator maintenance interval is based on hours of usage. Consult the Cummins Owner's Manual for the generator service interval.

Cummins - ISX (Optional)

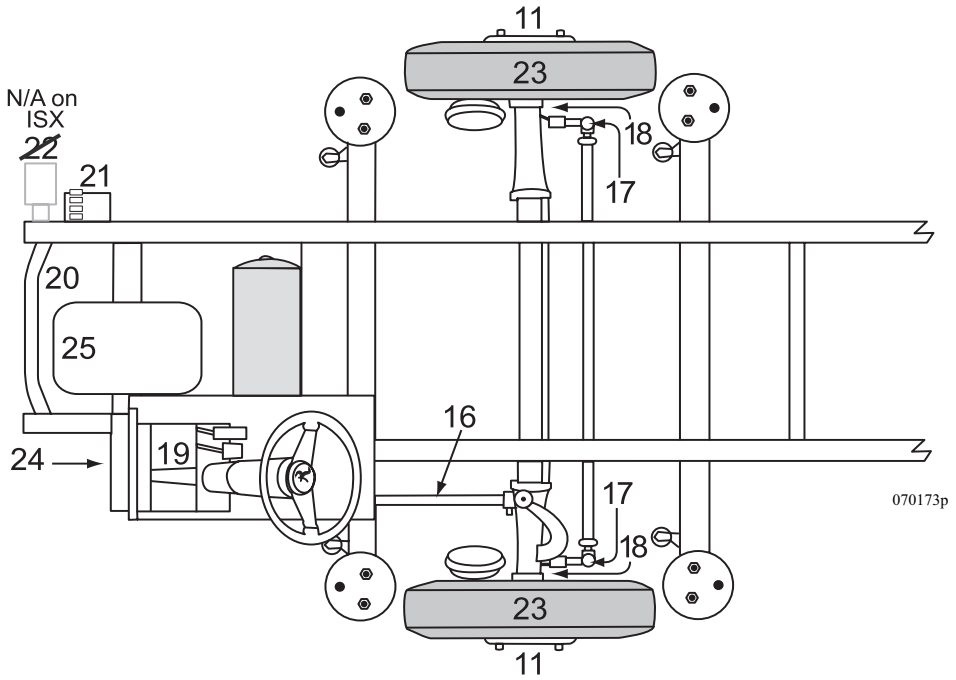

FRONT

	Component:	Action:	When:	Code-Refer to Chart:
1.	Engine Oil Fill	Keep to Full Mark	Daily	EO
2.	Engine Oil Filter	Replace	At Oil Change	OEM
3.	Transmission	Keep to Full Mark	Refer to OEM Manual	TS
4.	Engine Coolant Reservoir	Replace	Refer to OEM Manual	AF
5.	Hydraulic Fluid Reservoir	Keep to Full Mark	Monthly	TF
6.	Hydraulic Filter	Replace	15,000 or Annually	TF
7a.	Filter Fuel/Water Separator (Primary)	Replace	15,000 or 6 Months	FF
7b.	Filter Fuel (Secondary)	Replace	Refer to OEM Manual	OEM
8.	Air Dryer Filter	Replace	2 -3 Years	-
9.	Radiator/Charge Air Cooler	Inspect	Weekly	-
10.	Coolant Filter	Replace	Refer to OEM Manual	OEM
11.	Wheel Bearings	Re-pack	30,000 or Annually	HT
12.	Rear Differential	To Filler Plug	250,000 or 3 Years	MP
13.	PTO (ISX)	Inspect Fittings	Monthly	-
14.	Drive Shaft Universal Joints	Grease-2 Fittings	10,000 or Annually	CL
15.	Drive Shaft Slip Yoke	Grease-1 Fitting	10,000 or Annually	CL
16.	Drag Link	Grease-2 Fitting	5,000 or 6 Months	CL
17.	Center Link	Grease-2 Fittings	5,000 or 6 Months	CL
18.	Spindles/Kingpins	Grease-2 Fittings ea.	5,000 or 6 Months	CL
19.	Steering Intermediate Shaft	Grease-3 Fittings	30,000 or Annually	CL-4
20.	Air Tank Drains	Drains	Monthly	-
21.	HWH Reservoir	Keep to Full Mark	6,000 or 3 Months	TF
22.	RVA Reservoir (N/A on ISX)	-	-	-
23.	Tire Pressure	Check	Before Each Trip & Enroute Daily	-
24.	Steering Box	Grease-1 Fitting	Twice a Year	CL
25.	Generator	Refer to Service Manual	Refer to OEM Manual	OEM
26.	Batteries	Inspect	Bi-Monthly	DW
27.	Slack Adjuster/S-Cam	Grease-3 Fittings ea.	10,000 or Quarterly	CBL

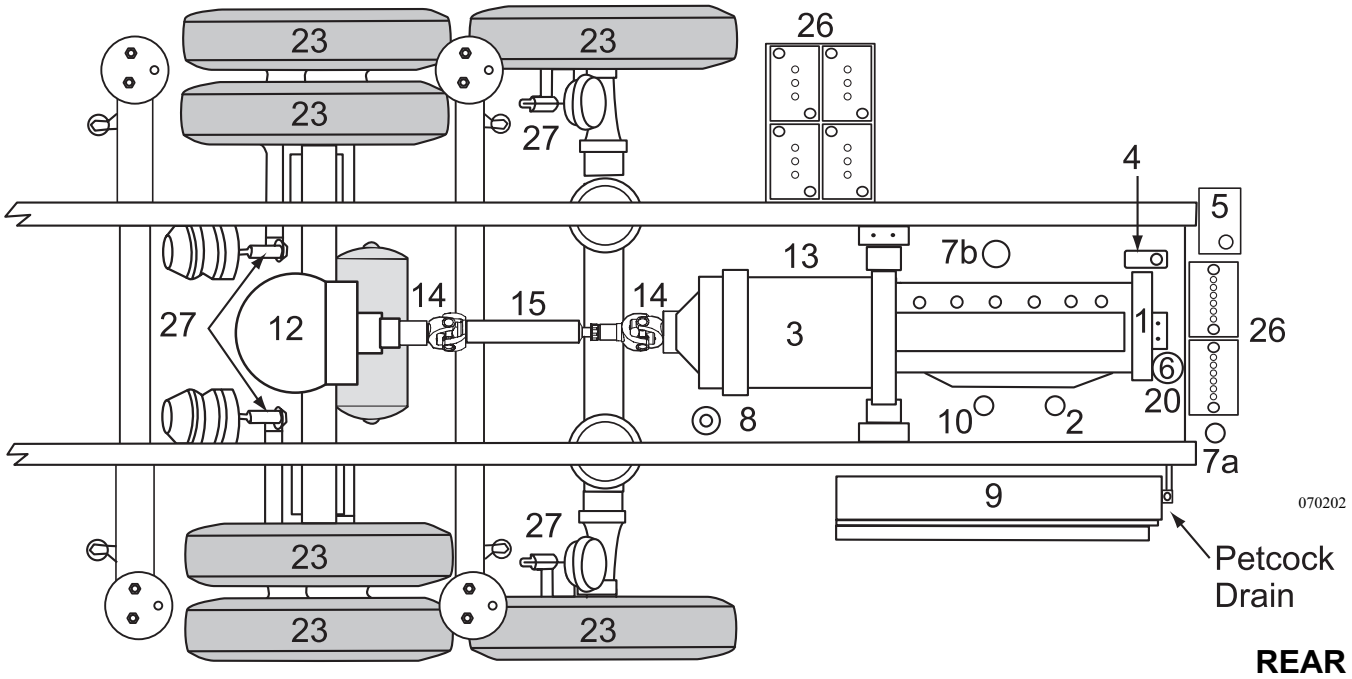

Lubrication Code Chart:

CL-4	U-Joints located inside coach under steering cover.
EO	Engine oil as recommended by engine manufacturer.
OEM	Refer to the Original Equipment Manufacturer's manual.
MP	API GL-5 or MT-1 type gear lubricant - Pennzoil Gear Plus SUPER-EW 75W-90, Synthetic.
GO	EP-SAE 90 gear oil.
CL	Chassis lubricant should be a high quality non corrosive multi-purpose lithium soap base lubricant that is water resistant and designed to withstand extremely high operating temperatures.
TF	Transmission fluid. Use *Dexron III*® transmission fluid only.
AF	Antifreeze as recommended by engine manufacturer.
BF	Dot-3 Brake fluid.
FF	Fuel Filter.
CBL	Clay-based Lubricant.
HT	High Temperature Bearing Grease
TS	TranSynd™
DW	Distilled Water
P	Petroleum Jelly

<u>NOTE:</u>
Service must be performed every twelve (12) months, regardless of actual mileage, to protect seals, bearings and gaskets from drying out and failing. The motorhome must be started and driven for at least 20 miles bi-monthly. It is important to remember the generator maintenance interval is based on hours of usage. Consult the OEM Manual for the generator service interval.

Detroit Diesel Series 60 (Optional)

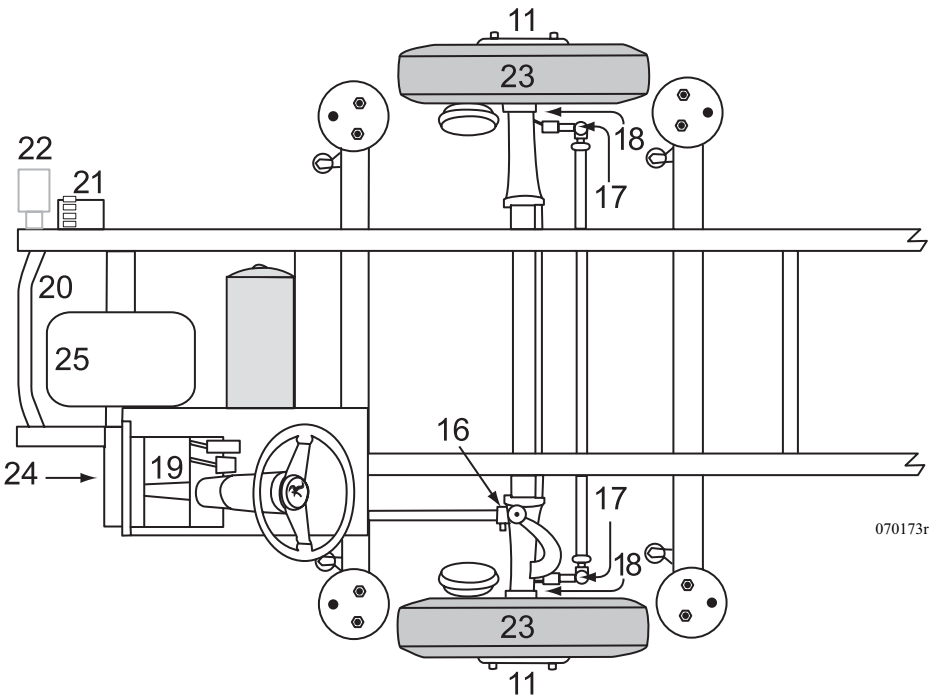

FRONT

	Component:	Action:	When:	Code-Refer to Chart:
1.	Engine Oil Fill	Keep to Full Mark	Before Each Trip + Daily Enroute	EO
2.	Engine Oil Filter	Replace	At Oil Change	OEM
3.	Transmission	Keep to Full Mark	Refer to OEM Manual	TS
4.	Engine Coolant Reservoir	Replace	Refer to OEM Manual	AF
5.	Hydraulic Fluid Reservoir	Keep to Full Mark	Monthly	TF
6.	Hydraulic Filter	Replace	15,000 or Annually	TF
7a.	Filter Fuel/Water Separator (Primary)	Replace	15,000 or 6 Months	FF
7b.	Filter Fuel (Secondary)	Replace	Refer to OEM Manual	OEM
8.	Air Dryer Filter	Replace	2 -3 Years	-
9.	Radiator/Charge Air Cooler	Inspect	Weekly	-
10.	Coolant Filter	Replace	Refer to OEM Manual	OEM
11.	Wheel Bearings	Re-pack	30,000 or Annually	HT
12.	Rear Differential	To Filler Plug	250,000 or 3 Years	MP
13.	Slack Adjusters/S-Cams	Grease-3 Fitting ea.	10,000 or 3 Months	CBL
14.	Drive shaft Universal Joints	Grease-2 Fittings	10,000 or Annually	CL
15.	Drive shaft Slip Yoke	Grease-1 Fitting	10,000 or Annually	CL
16.	Drag Link	Grease-2 Fitting	5,000 or 6 Months	CL
17.	Center Link	Grease-2 Fittings	5,000 or 6 Months	CL
18.	Spindles/Kingpins	Grease-2 Fittings ea.	5,000 or 6 Months	CL
19.	Steering Intermediate Shaft	Grease-3 Fittings	30,000 or Annually	CL-4
20.	Air Tank Drains	Drains	Monthly	-
21.	HWH Reservoir	Keep to Full Mark	6,000 or 3 Months	TF
22.	RVA Reservoir	Keep to Full Mark	6,000 or 3 Months	TF
23.	Tire Pressure	Check	Before Each Trip + Daily Enroute	-
24.	Steering Box	Grease-1 Fitting	Twice a Year	CL
25.	Generator	Refer to Service Manual	Refer to OEM Manual	OEM
26.	Batteries	Inspect	Bi-Monthly	DW
		Apply	10,000 or Quarterly	P
27.	EGR Filter	Drain / Replace	Monthly/Annually	OEM

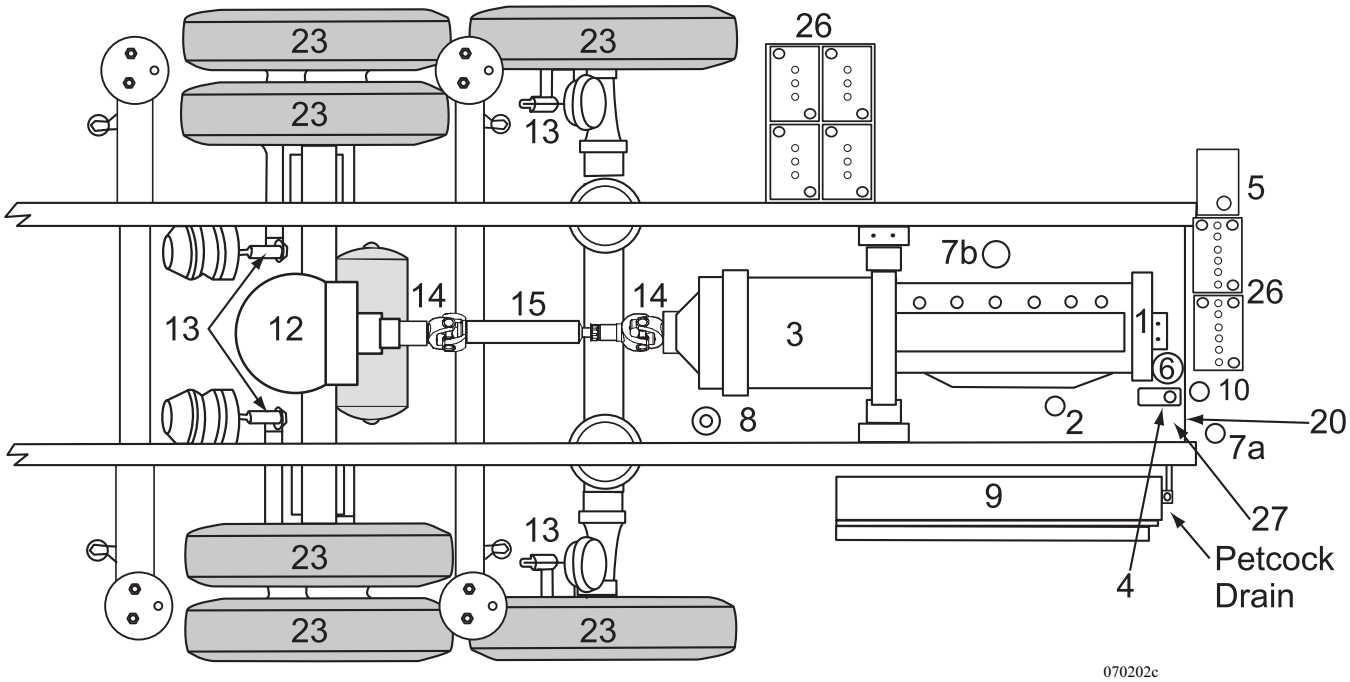

REAR

Lubrication Code Chart:

CL-4	U-Joints located inside coach under steering cover.
EO	Engine oil as recommended by engine manufacturer.
OEM	Refer to the Original Equipment Manufacturer's manual.
MP	API GL-5 or MT-1 type gear lubricant - Pennzoil Gear Plus SUPER-EW 75W-90, Synthetic.
GO	EP-SAE 90 gear oil.
CL	Chassis lubricant should be a high quality non corrosive multi-purpose lithium soap base lubricant that is water resistant and designed to withstand extremely high operating temperatures.
TF	Transmission fluid. Use *Dexron III*® transmission fluid only.
AF	Antifreeze as recommended by engine manufacturer.
BF	Dot-3 Brake fluid.
FF	Fuel Filter.
CBL	Clay-based Lubricant.
HT	High Temperature Bearing Grease
TS	TranSynd™
DW	Distilled Water
P	Petroleum Jelly

<u>NOTE:</u>
Service must be performed every twelve (12) months, regardless of actual mileage, to protect seals, bearings and gaskets from drying out and failing. The motorhome must be started and driven for at least 20 miles bi-monthly. It is important to remember the generator maintenance interval is based on hours of usage. Consult the Cummins Owner's Manual for the generator service interval.

SPECIFICATIONS CHARTS

Dimensions

2005 Signature Specifications	40' Platinum II	40' Platinum III	40' Platinum IV	42' Chateau II	42' Chateau III	42' Chateau IV	44' Conquest III	45' Castle II	45' Castle III	45' Castle IV	45' Commander IV
Weights											
Gross Vehicle Weight Rating	47,600 lbs.	47,600 lbs.	47,600 lbs.	47,600 lbs.	47,600 lbs.	47,600 lbs.	47,600 lbs.	47,600 lbs.	47,600 lbs.	47,600 lbs.	47,600 lbs.
Gross Combined Weight Rating	57,600 lbs.	57,600 lbs.	57,600 lbs.	57,600 lbs.	57,600 lbs.	57,600 lbs.	57,600 lbs.	57,600 lbs.	57,600 lbs.	57,600 lbs.	57,600 lbs.
Front Gross Axle Weight Rating	14,600 lbs.	14,600 lbs.	14,600 lbs.	14,600 lbs.	14,600 lbs.	14,600 lbs.	14,600 lbs.	14,600 lbs.	14,600 lbs.	14,600 lbs.	14,600 lbs.
Rear Gross Axle Weight Rating	23,000 lbs.	23,000 lbs.	23,000 lbs.	23,000 lbs.	23,000 lbs.	23,000 lbs.	23,000 lbs.	23,000 lbs.	23,000 lbs.	23,000 lbs.	23,000 lbs.
Tag Axle Weight Rating	10,000 lbs.	10,000 lbs.	10,000 lbs.	10,000 lbs.	10,000 lbs.	10,000 lbs.	10,000 lbs.	10,000 lbs.	10,000 lbs.	10,000 lbs.	10,000 lbs.
Measurements											
Wheelbase	250 3/4"	250 3/4"	250 3/4"	271"	271"	271"	278"	280"	280"	280"	280"
Overall Length	41' 1"	41' 1"	41' 1"	43' 1"	43' 1"	43' 1"	44' 7"	44' 11"	44' 11"	44' 11"	44' 9"
Overall Height	12' 1"	12' 1"	12' 1"	12' 1"	12' 1"	12' 1"	12' 1"	12' 1"	12' 1"	12' 1"	11'10"
Interior Width	96"	96"	96"	96"	96"	96"	96"	96"	96"	96"	96"
Exterior Width	100.5"	100.5"	100.5"	100.5"	100.5"	100.5"	100.5"	100.5"	100.5"	100.5"	100.5"

NOTE:
The actual overall length of the motorhome may differ from that indicated due to variances in the manufacturing process and/or installed components. The actual length may be greater or less than that indicated.

Tank Capacities

Tank Capacities	40' Platinum II	40' Platinum III	40' Platinum IV	42' Chateau II	42' Chateau III	42' Chateau IV	44' Conquest III	45' Castle II	45' Castle III	45' Castle IV	45' Commander IV
Grey Water	56 gal	56 gal	56 gal	56 gal	56 gal	56 gal	56 gal	56 gal	56 gal	56 gal	56 gal
Black Water	40 gal	40 gal	40 gal	40 gal	40 gal	40 gal	40 gal	40 gal	40 gal	40 gal	40 gal
Fresh Water	100 gal	100 gal	100 gal	100 gal	100 gal	100 gal	100 gal	100 gal	100 gal	100 gal	100 gal
Fuel Tank (true 150 gallon tank)	150 gal	150 gal	150 gal	150 gal	150 gal	150 gal	150 gal	150 gal	150 gal	150 gal	150 gal
LP-Gas Tank*	25 gal	25 gal	25 gal	25 gal	25 gal	25 gal	25 gal	25 gal	25 gal	25 gal	25 gal

* Actual filled LP-Gas capacity is 80% of listing due to safety shut off required on tank.

NOTE:
All tank capacities are estimated based upon calculations provided by the tank manufacturers and represent approximate capacities. The actual "usable capacity" may be greater or less then the estimated capacities based upon fabrication and installation of the tanks.

NOTE:
This chart reflects product specifications available at the time of printing. Therefore any floor plans introduced thereafter may not be reflected in the chart. All other information contained throughout the manual will still apply.

Engine Specifications

ENGINE SPECIFICATIONS	ISM	ISX	Series 60
Cubic Inch Displacement	11 L/62 CI	15 L/915CI	14.0L/858 CI
Engine HP	500 HP @ 1800 RPM	525 HP @ 1800 RPM	525 @ 2100 RPM
Engine Torque	1550 lbs./ft. @ 1200 RPM	1,650 @ 1200 RPM	1650 @ 1200 RPM
Governed Speed	1800 RPM	2000 RPM	2100 RPM
Firing Order	153624	153624	156324
Rear Axle Ratio	4:30:1	4:30:1	4:30:1
Alternator Amp Size	270 Amp	270 Amp	270 Amp

Chassis Fluid Capacities

Chassis Liquid Capacities	ISM	ISX	Series 60
Engine Oil	38 Qts.	48 Qts.	40 Qts.
Transmission Oil (initial amount)	32 Qts.	32 Qts.	32 Qts.
Transmission Oil (with service)	36 Qts. w/ filter	36 Qts. w/ filter	36 Qts. w/Filter
Radiator Coolant (initial amount)	50 - 55 Qts.	64 Qts.	50-55 Qts.
A/C Refrigerant (initial amount)	4 lbs. 134 A	4 lbs. 134 A	4lbs. 134 A
Hydraulic Oil	50 - 55 Qts.	50 - 55 Qts.	50-55 Qts.
Rear End	15 Qts. Approx.	15 Qts. Approx.	15 Qts. Approx.

Generator Specifications

12.5 Kw

SERVICE INFORMATION

Refer to operator's manual for maintenance specifications and adjustments.

Air Cleaner	_		140-3071
Oil Filter	_		187-1000
Fuel Filter	_		149-2513
Oil Capacity	_	6.7	Qts w/oil filter
API Designation	_	CE	

Temp	SAE Viscosity
5° - 120°F	15W-40
(-13°F) - 68°F	10W-30
(-40°F) - 68°F	5W-30

If service/parts are needed the Onan distributor can be located in the yellow pages under Generators-Electric. In the USA or Canada call 1-800-888-Onan

DC Fuse & Radiator Cap Under Cover.

Generator Specifications 060148

Belts & Filters

Cummins Engine			
Filter & Belt	**Manufacturer**	**ISM**	**ISX**
Coolant Filter	Fleetguard	WF 2071	WF 2126
Oil Filter	Fleetguard	LF 9001	LF 9001
Fuel Filter Primary	Parker	53230P	53230P
Fuel Filter (Secondary)	Fleetguard	FS 1000	FF 2200
Aqua-Hot Fuel Filter	Raycor	R2TRA000T (10 micron)	R2TRA000T (10 micron)
Hydraulic Filter (Early)	Parker	IN HC 5720 (10 micron)	IN HC 5720 (10 micron)
Hydraulic Filter (Late)	MP Filtri	MP Filtri CSG100P10A (10 micron)	MP Filtri CSG100P10A (10 micron)
Alternator Belt	Cummins	3028521	3682893
A/C Belt	Dayco	3401283	3682687
Air Filter	Donaldson	P53744802 (MP 2329)	P53744802 (MP 2329)
Air Dryer Filter	Meritor Wabco	R950011	R950011
Transmission Filter	Allison	29526889	29526889
A/C Filter Drier	--	MP 05400001*	MP 05400001*
**MP= Manufacturer Part #.*			

Detroit Engine		
Filter & Belt	**Manufacturer**	**Series 60**
Coolant Filter	Power Cool	WF 2071
Oil Filter x 2	Power Guard	LF 9001
Fuel Filter Primary	Power Guard	200200 (25 micron)
Fuel Filter (Secondary)	Power Guard	FS 1000
Aqua-Hot Fuel Filter	Raycor	R2TRA000T (10 micron)
Hydraulic Filter (Early)	Parker	IN HC 5720 (10 micron)
Hydraulic Filter (Late)	MP Filtri	MP Filtri CSG100P10A (10 micron)
Alternator Belt	Detroit Diesel	23520613
A/C Belt	Detroit Diesel	23520613
Air Filter	Donaldson	P53744802 (MP 2329)
Air Dryer Filter	Meritor Wabco	R950011
Transmission Filter	Allison	29526889
A/C Filter Drier	--	MP 05400001*
**MP= Manufacturer Part #.*		

NOTE:
Filter and belt numbers were correct at the time of printing. Verify the numbers at time of removal. The manufacturer will not be responsible for incorrect filter or belt usage. Please refer to the engine manufacturer's operating instructions for specific maintenance information.

Application	AH (20HR)	CCA†	RC (25A @ 80° F) MINUTES
12 Volt Chassis* Group 31p - MHD (2 each)		950	195
6 Volt Domestic** U2200 (4 each)	450		75Amp@ 80º F. = 230 Min.
12 Volt Domestic* GPL-8D (All Electric - 5 each)	255	1350	461

Approximate Hours of Ampere Load					
**U2200	5 AMPS	10 AMPS	15 AMPS	20 AMPS	25 AMPS
	110	44	25	18	14

**Batteries connected in parallel. **Four batteries connected in a Series/Parallel configuration.*
†CCA Ratings are at 0º F. These are the minimum requirements.

Approximate Hours at Ampere Load				
AGM GPL-8D	5 AMPS	8 AMPS	15 AMPS	25 AMPS
	153	95.6	51	30.6

Voltage to maintain 1.75 Volts per cell (10.5 Volts for 12 Volt battery).

Battery State of Charge vs Voltage/Specific Gravity			
VOLTAGE	SPECIFIC GRAVITY	STATE OF CHARGE	DEPTH OF DISCHARGE
12.66	1.265	100%	0%
12.45	1.225	75%	25%
12.25	1.190	50%	50%
12.05	1.145	25%	75%
11.90	1.100	0%	100%

Voltage Reading: Battery fully charged at rest for one hour.

Battery Charge Voltage chart.eps

Engine Cold Cranking Amp Requirements				
ISM	1800	CCA	12	VOLTS
ISX	1850	CCA	12	VOLTS
Series 60	1800	CCA	12	VOLTS

CCA Rating are at 0º F. These are the minimum requirements.

METRIC/U.S. CONVERSION CHART

U.S. Customary to Metric			Metric to U.S. Customary	
Measurement	Multiplied By	Equals/Measurement	Multiplied By	Equals
Length				
inches (in)	25.4	millimeters (mm)	0.03937	inches (in)
inches (in)	2.54	centimeters (cm)	0.3937	inches (in)
feet (ft)	0.3048	meters (m)	3.281	feet (ft)
yards (yd)	0.9144	meters (m)	1.094	yards (yd)
miles (mi)	1.609	kilometers (km)	0.6215	miles (mi)
Area				
square inches (in^2)	645.16	square millimeters (m^2)	0.00155	square inches (in^2)
square inches (in^2)	6.452	square centimeters (cm^2)	0.15	square inches (in^2)
square feet (ft^2)	0.0929	square meters (m^2)	10.764	square feet (ft^2)
Volume				
cubic inches (in^3)	16387.0	cubic millimeters (mm^3)	0.000061	cubic inches (in^3)
cubic inches (in^3)	16.387	cubic centimeters (cm^3)	0.06102	cubic inches (in^3)
cubic inches (in^3)	0.01639	liters (L)	61.024	cubic inches (in^3)
fluid ounces (fl oz)	29.54	milliliters (mL)	0.03381	fluid ounces (fl oz)
pints (pt)	0.47318	liters (L)	2.1134	pints (pt)
quarts (qt)	0.94635	liters (L)	1.0567	quarts (qt)
gallons (gal)	3.7854	liters (L)	0.2642	gallons (gal)
cubic feet (ft^3)	28.317	liters (L)	0.03531	cubic feet (ft^3)
cubic feet (ft^3)	0.02832	cubic meters (m^3)	35.315	cubic feet (ft^3)
Weight/Force				
ounces (av) (oz)	28.35	grams (g)	0.03527	ounces (av) (oz)
pounds (av) (lb)	0.454	kilograms (kg)	2.205	pounds (av) (lb)
U.S. tons (t)	907.18	kilograms (kg)	0.001102	U.S. tons (t)
U.S. tons (t)	0.90718	metric tons (t)	1.1023	U.S. tons (t)
Torque/Work Force				
inch-pounds (lbf.in)	11.298	Newton-centimeters (N.cm)	0.08851	inch-pounds (lbf.in)
foot-pounds (lbf.ft)	1.3558	Newton-meters (N.m)	0.7376	foot-pounds (lbf.ft)
Pressure/Vacuum				
inches of mercury (inHg)	3.37685	kiloPascals (kPa)	0.29613	inches of mercury (inHg)
pounds per square inch (psi)	6.895	kiloPascals (kPa)	0.14503	pounds per square inch (psi)

Measurement	Subtract	Divide By	Equals/Measurement	Multiply By	Add	Equals
Temperature						
degrees Fahrenheit (ºF)	32	1.8	degrees Celsius (ºC)	1.8	32	degrees Fahrenheit (ºF)

After scheduled services are performed, record the date, odometer reading and who performed the service in the boxes provided after the maintenance interval. Any additional information from "Owner Checks and Services" or "Periodic Maintenance" can be added on the following record pages. **In addition, retain all maintenance receipts.** The owner information portfolio is a convenient place to store them.

LUBRICATION SERVICE RECORD

KEY TO SERVICES

A -- Lubrication & Inspection
A1 -- Motor Oil & Filter Change
A2 -- Transmission Oil Change
A3 -- Drive Axle Oil Change
A4 -- Wheel Bearing Service
B -- Prescribed Service
C -- Prescribed Service
D -- Prescribed Service
E -- Prescribed Service

MILEAGE	SERVICES									JOB PERFORMED	
	A	A1	A2	A3	A4	B	C	D	E	DATE	BY
1											
2											
3											
4											
5											
6											
7											
8											
9											
10											
11											
12											
13											
14											
15											
16											
17											
18											
19											
20											
21											
22											
23											
24											
25											
26											
27											
28											
29											
30											

LUBRICATION SERVICE RECORD

KEY TO SERVICES

A -- Lubrication & Inspection
A1 -- Motor Oil & Filter Change
A2 -- Transmission Oil Change
A3 -- Drive Axle Oil Change
A4 -- Wheel Bearing Service
B -- Prescribed Service
C -- Prescribed Service
D -- Prescribed Service
E -- Prescribed Service

MILEAGE	SERVICES									JOB PERFORMED	
	A	A1	A2	A3	A4	B	C	D	E	DATE	BY
1											
2											
3											
4											
5											
6											
7											
8											
9											
10											
11											
12											
13											
14											
15											
16											
17											
18											
19											
20											
21											
22											
23											
24											
25											
26											
27											
28											
29											
30											
31											
32											
33											
34											
35											
36											
37											
38											
39											
40											
41											
42											
43											
44											
45											
46											
47											
48											
49											
50											

BATTERY RECORD

MAKE	TYPE	DATE INSTALLED	REPAIRS	DATE REPLACED	SERVICE	
					MONTHS	MILES

TIRE RECORD

MAKE	TYPE	PLY	DATE INSTALLED	REPAIRS	DATE REPLACED	SERVICE	
						MONTHS	MILES

BATTERY RECORD

MAKE	TYPE	DATE INSTALLED	REPAIRS	DATE REPLACED	SERVICE	
					MONTHS	MILES

TIRE RECORD

MAKE	TYPE	PLY	DATE INSTALLED	REPAIRS	DATE REPLACED	SERVICE	
						MONTHS	MILES

BATTERY RECORD

MAKE	TYPE	DATE INSTALLED	REPAIRS	DATE REPLACED	SERVICE	
					MONTHS	MILES

TIRE RECORD

MAKE	TYPE	PLY	DATE INSTALLED	REPAIRS	DATE REPLACED	SERVICE	
						MONTHS	MILES

TECHNICAL PUBLICATIONS

Manager Vance Buell

OPERATIONS

TECHNICAL WRITERS

Robert Buckholtz - OR
William Birch - OR
James Magee - OR
Nate Bondurant - OR
Fran Weisenstein - IN
Thomas Joachim - IN

CREATIVE DESIGNERS

Kelly Stroble - OR
Aaron Graham - OR
Julie Slagle - IN
Amanda Murray - IN

TECHNICAL ILLUSTRATIONS

Josh Means, Kelly Stroble, Aaron Graham, Dustin Hutchcraft

Signature 2005 Technical Writer James Magee
Signature 2005 Layout Design & Cover Kelly Stroble

PRINTING

TechnaPrint Eugene, OR

ONLINE

CORPORATE SITE
www.monaco-online.com

ONLINE TOURS
www.monaco-online.com/tours/

Signature 2005

Index

A

ABS/ATC System (Anti-lock Brakes) 438
Air Conditioning - Roof 181
Operations 181
Return Air Filters 183
Air Dryer 429
Air Dryer Cycle 431
Desiccant Cartridge 430
Desiccant-Type Air Dryer 431
Air Filter 507
Air Filter Minder 507
Changing the Filter 507
Air Mattress Bed 233
Troubleshooting 234
Air Spring Inspections 432
Air Supply System 424
Air Coupler - Universal 428
Air Fittings 426
Air Governor 426
Air Storage Tanks 426
Air System - Charging (External) 428
Aladdin™ Engine Display 415
Aladdin™ System 240
Compass Calibration 243
Operations 241
System Options 243
All Electric (Opt.) 372
House Batteries 375
Main Battery Disconnect 377
Meters 373
Overview 373
Remotes 374
Wiring Systems Interfaced 378
Alternator 390
Alternator Testing Procedure 391
Appliances - Introduction 161
Aqua-Hot 185
Aqua-Hot Overview 191
Fuel Filter/Water Separator 190
Automatic Appliance Selector 176
Awnings 221
Awning Care & Cleaning 226
Door Awning 225
Four Channel Remote 221
Patio Awning 222
Slide-out Cover 226
Window Awning 224

B

Backing Up A Motorhome 56
Battery 362
Battery Charge Time & Consumption Rate .367
Battery Maintenance 364
Battery Voltage & Current 366
House Batteries 363
How It Works 362
Testing the Battery 364
Battery - Chassis 384
Battery Cut-off Switch 322
Battery Disconnect - Chassis 383
Battery Disconnect - House 322
Battery Specification Charts 521
Blinds - Cockpit (Opt.) 229
Brake - Auxiliary (Engine Brake) 489
Brake Systems 435
Air Brakes 435
Brake Adjustment/Slack Adjuster 436
Brake Systems - Backup 437
Park & Emergency Brake System 435
Breaking Camp 63
Bulb Usage - Interior 371
Bulb Usage Chart - Exterior 417

C

Carbon Monoxide Detector 110
Alarm 112
Cleaning & Maintenance 113
Operation 111
Testing 112
Ceiling 140
Cell Phone Antenna 239
Charge Air Cooler 488
Chassis - Introduction 423
Chassis Electrical - Introduction 383
Citizen Band (CB) Radio 238
Cold Weather Conditions 290
Cold Weather Storage 290
Collision Warning System (Opt.) 44
CWS Components 44
CWS Situations 47
Data Recorder 49
Driver Display Unit 44
Side Sensors 46
Smart Cruise® 46
Console 396
Leveling Controls 397
Parking Brake 397
Transmission Shift Selector 396
Cooktop 177
Care & Cleaning 178
Cooktop - All Electric (Opt.) 179
Coolant 483
Coolant Additives - SCA 485
Countertops 144
Solid Surface 144
Customer Relations 17

D

Dash 398
Gauges 399
Indicator Lamps 398
Switches 402
Dash Air Conditioner & Heater Controls . . .408
About Refrigerants 410
Diagnostic Plug Location 415
Dinette Bed Conversion (Opt.) 233
Dishwasher (Opt.) 203
Distribution Panel - House 12 Volt 358
Multiplex 358
Distribution Panels - House 240/120 355
Circuit Breaker 356
Door - Sliding 230
Drive Axle & Drive Shaft 451
U-Joint Angles, Phasing & Drive Shaft Balance 454
Driving & Safety 35
Driving Tips 40
Familiarize Yourself 35
Inspections 35
Mirror Adjust (Manual) 36
Safety Seat Belts 37
Dry Camping 60
Dryer (Opt.) 201
Dryer Maintenance 202
Dryer Operation 201

E

EGR Filter (Detroit Only) 508
Electric Baseboard Heater (Opt.) 192
Emergency Roadside Procedures 64
Dead Chassis Battery 68
In Case of Flat Tire 66
Light - Retractable 67
OnStar® (Optional) 65
Running Out of Fuel 67
Engine - General Information 471
Engine "No Start" - Flow Chart 418
Engine Diagram 472
Cummins - I.S.M-II Standard 472
Cummins ISX (Opt.) 474
Detroit Diesel (Opt.) 476
Engine Oil 480
Engine Shutdown 483
Extended Engine Shutdown 483

Entry Door **212**
Air Seal 212
Door Bell 214
Latch Adjustments 213
Screen Door 213
Entry Step **209**
Operation 209
Stepwell Cover 211
Tips 210
Equipment - Introduction **209**
Escape (Egress) Window **114**
Exterior Care **119**
Bright Metal 123
Corrosion 119
Drying 120
Paint Codes 121
Tire Care 122
Washing 119
Waxing 120
Wheels - Coated Aluminum 122
Exterior Maintenance **124**
Fiberglass 124
Roof Care & Seal Inspections 124
Front Axle **442**
Alignment 443
Center Link 448
Control Arm Bushings 449
Drag Link 448
Lubrication Maintenance Safety 445
Steering Column 447
Steering Components 446
Steering Spindles 449
Fuel System **495**
Fuel Filters 498
Fuel Lines & Hoses 498
Fuel Requirements 495
Fuel Sender 496
Fuel Tank 496
Rear Start Switches 500
Fuses **361**
Knowing When to Say When 362
Tools of the Trade 361
Fuses & Circuits **385**
Isolator Relay 387
Rear Start Switches 386
Relays 387

F

Fabrics **126**
Fabric Cleaning Codes 127
Fabric Specifications Charts 128
Fabric Specifications Charts - Ralph Lauren 131
Leather 136
Sensuede 136
Vinyl 133
Fans **227**
Bathroom Fan 228
Exhaust Fan 227
Faucets **279**
Fire Extinguisher **113**
Floors **137**
Carpet Cleaning Guide 137
Laminate Floor (Opt.) 139
Tile Floors 138

G

Generator - 240 Volt AC **329**
Generator Exercise 332
Generator Fuel 331
Powering the Equipment 331
Pre-Start Checks 329
Resetting the Circuit Breaker 332
Starting the Generator 330
Stopping the Generator 330
Generator - Auto Gen Start (RC7 GS) **333**
GFCI Breakers & Outlets **356**
Glossary of Terms **20**

H

Height Control Valves 433
Adjusting Ride Height 433
Hitch 53
Tow Plug Connection 54
Towing Air Brake Port (Non ABS) 55
Using the Rear Receiver 53
House Electrical - Introduction 321
Hydraulic System 501
Electric Override (ISM Only) 504
Electric Thermovalve (ISX Engine) 504
Fan Motor 505
Hydraulic Cooler 502
Hydraulic Fan System 503
Hydraulic Filter 505
Hydraulic Pump 502
Hydraulic Reservoir 506
Switching Valve 504
Thermovalve (ISM & Series 60 Engines) . .503

I, J

Interior Care 126
Cockpit 126
Inverter - 3000 Watt 336
Battery Charging with the Inverter 338
Battery Temperature Sensor 338
Main Menu Display 339
Meters Menu 340
Pass-Through AC Power 339
Programming the Inverter 341
RC7 GS Remote 337
Re-booting the Inverter 344
Stand-By Operation 337
Inverter-Sine Wave (Opt.) 344
Automatic Generator Start Programming . . .351
Battery Charging 349
Battery Temperature Sensor 349
Inverter Facts 354
Meters Menu 350
Pass-Through Power 349
Programming & Resetting 347
Remote 346
Stand-by Operation 348

K

Keyless Entry 215
Bay Doors - Unlock 215
Key Fob 216
Keyless Entry Code Programming 216

L

Ladder - Rear 237
Leveling - Air 458
Automatic Air Leveling 460
Manual Air Leveling 462
Leveling - Hydraulic (Opt.) 463
Automatic Leveling 466
Maintenance 469
Manual Leveling 466
Manual Override 468
Retracting Leveling Jacks 468
Lights - Interior Halogen 370
LP-Gas Consumption 315
LP-Gas Detector 302
Alarm 303
Maintenance 305
Testing 303
LP-Gas Distribution Lines 314
LP-Gas Emergency Procedures - Checklist . . .305
LP-Gas Fundamentals 310
LP-Gas Hose Inspection 313
LP-Gas Regulator 311
LP-Gas Safety Tips 316
LP-Gas Systems 301

LP-Gas Tank **306**
Measurement 306
Tank Capacity 306
Tank Filling 306
Tank Operation 309
Lubrication Charts **512**
Cummins - ISM 512
Cummins - ISX (Opt.) 514
Detroit Diesel Series 60 (Opt.) 516
Lubrication Maintenance **508**

M, N, O

Maintenance Records **523**
Map Lights **371**
Metric/U.S. Conversion Chart **522**
Microwave/Convection Oven **172**
Cleaning the Microwave/Convection Oven . . 173
Setting the Clock 173
Mold & Mildew **147**
Monitor System - Backup/Surveillance **107**

P, Q

Pest Control **149**
Plumbing Manifold **270**
Power Shades (Opt.) **229**
Power Sunvisor **229**
Power Super Slide (Opt.) **236**
Pre-trip Preparations - Checklist **50**
Privacy Drapery Electric (Opt.) **230**

R

Receiver-Monitor **239**
GPS Navigation 240
Refrigerator **161**
Air in LP-Gas Supply Lines 167
Control Panel 163
Cooling Unit Fans 165
Doors 165
Icemaker 164
Interior Light 166
Operation Specifics 162
Refrigerator Alarm 165
Service 167
Storage Procedures 166
Refrigerator - Residential (Opt.) **167**
Reporting Safety Defects **17**
Roof Antennas **244**

S

Safe (Opt.) **108**
Safety Terms **15**
Satellite Radio (Opt.) **244**
Satellite Systems **251**
In-Motion System 253
Seat Controls **231**
Swivel Seats 232
Security System (Opt.) **100**
Service Center **294**
Service Suggestions **18**
Be Reasonable With Your Requests 19
Inspect the Work Properly 19
No Looking Over the Technician's Shoulder . 19
Prepare a List 19
Prepare for the Appointment 19
Set-Up Procedure Checklist **58**
Shock Absorber **458**
Shore Power Hook-up **323**
AC120 Volt & Amp Meters 327
Power Cord Reel 327
Shower **140**
Slide-out Operation **217**
Extending & Retracting Slide-out Rooms . . 218
Manual Override 220

Smoke Detector 108
Maintenance 109
Operation 108
Testing 109
Troubleshooting 109
Sofa Bed Conversion 232
Solar Panel 368
Charge Controller 368
Solar Panel Care 370
Specifications Charts 518
Belts & Filters 520
Chassis Fluid Capacities 519
Dimensions 518
Engine Specifications 519
Generator Specifications 519
Tank Capacities 518
Stainless Steel Surfaces 145
Starting Procedure 478
Cold Weather 478
Normal Starting 478
Steering Column & Smart Wheel 392
Smart Wheel Operation 392
Tilt & Telescope 395
Wiper Function 394
Steering Gear 450
Storage 152
Long Term 153
Removal from Storage 156
Short Term 152
Winter Storage Checklist 155
Storage - Under bed 235
Super Slide (Opt.) 236
System Control Center 414

T

Tag Axle 455
Lubrication Maintenance 457
Oil Change Intervals 457
Taking Delivery 17
Customer Responsibilities 18
Dealer Responsibilities 18
Monaco Responsibilities 17
Tires 74
Air Pressure Checklist 78
Importance of Air Pressure 74
Inspecting & Pressure 77
Storage of Tires - Long Term 80
Supporting When Leveling 79
Tire Chart - Goodyear 75
Tire Pressure Inflation Guideline 75
Tire Rotation 80
Tire Vibration 79
Tread 80
Toilet 287
Cleaning & Maintenance 288
Drain Traps & Auto Vents 289
Towing Procedures 71
Disabling Parking Brake 72
Transfer Switch 328
Transmission 490
Check Trans Indicator 492
Periodic Inspections 493
Shift Selector 490
Transmission Lubricating Fluid 493
Fluid Levels - Cold Check 494
Fluid Levels - Hot Check 495
TV & Entertainment Components 245
Antenna Boost 246
Bose System 250
Connections - Cable TV, Computer & Phone . .245
Operating the Components 248
Television - Flat Screen LCD 248
Television (Front) Lockout Feature 245
Television Inputs 245
TV Antenna 246
TV/Entertainment System - Bedroom 254
Radio - Bedroom 255
TV/Entertainment System - Exterior 259

U

Universal Remote 256
Bedroom Panel 258

V

Vendor List 24
Views 98
Curbside 99
Front 98
Rear 98
Roadside 99

W, X, Y, Z

Wall Coverings 141
Wall Thermostat 180
Warranty - Limited: Signature 2005 1
Disclaimer of Consequential & Incidental Damages .4
Events Discharging Obligation Under Warranty . .4
How To Get Service 3
Legal Remedies 5
Limitations of Implied Warranties 2
What the Warranty Covers 2
What the Warranty Does Not Cover 4
What We Will Do To Correct Problems 2
Warranty - Limited: 2005 Roadmaster Chassis6
Disclaimer of Consequential & Incidental Damages .9
Events Discharging Obligation Under Warranty . .8
How to Get Service 8
Legal Remedies 9
Limitations of Implied Warranties 6
What the Warranty Covers 7
What the Warranty Does Not Cover 8
What We Will Do to Correct Problems 7
Warranty Information File 10
Warranty Transfer Application - Limited . . .31
Washer (Opt.) 197
Cleaning the Washer 200
Operating Instructions 198
Test Cycle 198
Winterizing the Washer 200
Washer-Dryer 193
Test Procedure 193
Washer-Dryer Maintenance 195
Winterizing the Washer-Dryer 196
Waste Pump (Opt.) 285
Waste Water Systems 280
Proper Waste Disposal 280
Tank Flush 283
Waste Drain & Sewage Tanks 281
Waste Drain Hose 282
What Not to Put in Waste Holding Tanks . . .280
What to Put in Holding Tanks 281
Water - Potable 268
City Water Hook-up 269
Fresh Tank Fill 269
Gravity Fill 270
Hose Reel 268
Water Bay (Typical) 295
Water Dispenser - Hot 170
Water Filters 273
Galley Water Filter & Sanitizer (Opt.) 274
Maintenance 276
Water Pump 271
Pressure Accumulator Tank 273
Water Pump Troubleshooting 272
Water System Diagram 296
Water Systems 277
Disinfecting Fresh Water 278
Troubleshooting 277
Water Systems - Introduction 265
Water Tanks 266
Measurements & Calibration 266
Weighing the Motorhome 83
Cargo Carrying Capacity Flowchart 94
Six-Point Weighing Example 89
Weighing Procedure Worksheet 95
Weight Label 88
Weight Record Sheet 97
Weight Terms 83
Wheel Mounting 81
Window Treatments 146
Day/Night Shades 146
Mini-blinds 146
Windows 145
Condensation 145
Winterization 290
De-winterization 293
Using Air Pressure 291
Using Nontoxic Antifreeze 292
Wood Care 142

~ NOTES ~