# LAPALMA
## • 2004


Warranty

General Information

Driving & Safety

Exterior & Interior Care

Appliances

Equipment

Water Systems

LP-Gas System

Electrical Systems

Under Hood

Index

# 2004 LaPalma - Warranty

**WARRANTY LIMITED - 2004 LAPALMA** . . . . . **5**
LIMITATIONS OF IMPLIED WARRANTIES . . . . . 6
WHAT THE WARRANTY COVERS . . . . . 6
WHAT WE WILL DO TO CORRECT PROBLEMS . . . . . 6
HOW TO GET SERVICE . . . . . 7
WHAT THE WARRANTY DOES NOT COVER . . . . . 8
EVENTS DISCHARGING WARRANTOR FROM OBLIGATION UNDER WARRANTY . . 8
DISCLAIMER OF CONSEQUENTIAL & INCIDENTAL DAMAGES . . . . . 8
LEGAL REMEDIES . . . . . 9
**WARRANTY INFORMATION FILE** . . . . . **10**
**WOOD FINISH** . . . . . **10**

## MONACO MOTORHOME LIMITED WARRANTY

**What the period of coverage is:**

If you use your Monaco® motorhome only for recreational travel and family camping purposes, the Limited Warranty provided by Monaco ("Warrantor") covers your new motorhome when sold by an authorized dealer, for twelve (12) months from the original retail purchase date or the first 24,000 miles of use, whichever occurs first. However, the Limited Warranty provided by Warrantor covers the steel or aluminum frame structure of the sidewalls (excluding slide outs), roof, and rear and front walls for sixty (60) months from the original retail purchase date or the first 50,000 miles of use, whichever occurs first.

If you use your motorhome for any rental, commercial or business purposes whatsoever, the Limited Warranty provided by Warrantor covers your new motorhome when sold by an authorized dealer for ninety (90) days from the original retail purchase date or the first 24,000 miles of use, whichever occurs first. In addition, the Limited Warranty provided by Warrantor covers the steel or aluminum frame structure of the sidewalls (excluding slide outs), roof, and rear and front walls for twelve (12) months from the original retail purchase date or the first 24,000 miles of use, whichever occurs first. A conclusive presumption that your motorhome has been used for commercial and/or business purposes arises if you have filed a federal or state tax form claiming any business tax benefit related to your ownership of the motorhome.

The above Limited Warranty coverage applies to all owners, including subsequent owners, of the motorhome. However, a subsequent owner must submit a warranty transfer form by filing the form through an authorized Monaco dealer. A subsequent owner's warranty coverage period is the remaining balance of the warranty coverage period the prior owner was entitled to under this Limited Warranty. Warranty transfer forms can be obtained by contacting the Customer Relations Department. There is no charge for the transfer.

## Limitations of Implied Warranties

**ANY IMPLIED WARRANTIES ARISING BY WAY OF STATE LAW, INCLUDING ANY IMPLIED WARRANTY OF MERCHANTABILITY AND ANY IMPLIED WARRANTY OF FITNESS FOR A PARTICULAR PURPOSE, ARE LIMITED IN DURATION TO THE TERM OF THIS LIMITED WARRANTY AND ARE LIMITED IN SCOPE OF COVERAGE TO THOSE PORTIONS OF THE MOTORHOME COVERED BY THIS LIMITED WARRANTY**. Warrantor disclaims all implied and express warranties, including the implied warranty of merchantability and the implied warranty of fitness for a particular purpose, on components and appliances excluded from coverage as set forth below. There is no warranty of any nature made by Warrantor beyond that contained in this Limited Warranty. No person has authority to enlarge, amend or modify this Limited Warranty. The dealer is not the Warrantor's agent but is an independent entity. Warrantor is not responsible for any undertaking, representation or warranty made by any dealer or other person beyond those expressly set forth in this Limited Warranty. Some states do not allow limitations on how long an implied warranty lasts, so the above limitation may not apply to you.

## What the Warranty Covers

Warrantor's Limited Warranty covers defects in the manufacture of your motorhome and defects in materials used to manufacture your motorhome. Also see the section "What the Warranty Does Not Cover" set out below.

## What We Will Do to Correct Problems

Warrantor will repair and/or replace, at its option, any covered defect if: (1) you notify Warrantor or one of its authorized servicing dealers of the defect within the warranty coverage period and within five (5) days of discovering the defect; and (2) you deliver your Motorhome to Warrantor or Warrantor's authorized servicing dealer at your cost and expense. It is reasonable to expect some service items to occur during the warranty period. The performance of warranty repairs shall not extend the original warranty coverage period. Further, any performance of repairs after the warranty coverage period has expired or any performance of repairs to component parts and appliances excluded from coverage shall be considered "good will" repairs, which shall not alter the express terms of this limited warranty.

Warrantor may use new and/or remanufactured parts and/or components of substantially equal quality to complete any repair.

Defects and/or damage to interior and exterior surfaces, trim, upholstery and other appearance items may occur at the factory during manufacture, during delivery of the motorhome to the selling dealer or on the selling dealer's lot. Normally, any such defect or damage is detected and corrected at the factory or by the selling dealer during the inspection process performed by the Warrantor and the selling dealer. If, however, you discover any such defect or damage when you take delivery of the motorhome, you must notify your dealer or Warrantor within five days of the date of purchase to have repairs performed to the defect at no cost to you as provided by this Limited Warranty.

If either three or more unsuccessful repair attempts have been made to correct any covered defect that you believe substantially impairs the value, use or safety of your motorhome or repairs to any covered defect(s), which you believe substantially impairs the value, use or safety of your motorhome, have taken 30 or more days to complete, you must, to the extent permitted by law, notify Warrantor directly in writing of the failure to successfully repair the defect(s) so that Warrantor can become directly involved in exercising a final repair attempt for the purpose of performing a successful repair to the identified defect(s).

## How to Get Service

The Warranty Registration form must be returned to Warrantor promptly upon purchase to assure proper part replacement and repair of your motorhome. Failure to return the warranty registration form will not affect your rights under the Limited Warranty so long as you can furnish proof of purchase. For warranty service simply contact one of Warrantor's authorized service centers for an appointment, then deliver your motorhome (at your expense) to the service center. If you need assistance in locating an authorized warranty service facility contact:

**Warrantor's Warranty Department**
**1-877-466-6226**
**91320 Coburg Industrial Way**
**Coburg, Oregon 97408.**

In the event the motorhome is inoperative due to malfunction of a warranted part, Warrantor will pay the cost of having the motorhome towed to the nearest authorized repair facility provided you notify Warrantor prior to incurring the towing charges to receive directions to the nearest repair facility.

Because Warrantor does not control the scheduling of service work by its authorized servicing dealers, you may encounter some delay in scheduling and/or in the completion of the repairs.

### *What the Warranty Does Not Cover*

This Limited Warranty does not cover: any motorhome sold or registered outside of the United States or Canada; items which are added or changed after the motorhome leaves Warrantor's possession; items that are working as designed but which you are unhappy with because of the design; normal wear and usage, such as fading or discoloration of fabrics, or the effects of condensation inside the motorhome; defacing, scratching, dents and chips on any surface or fabric of the motorhome, not caused by Warrantor; routine maintenance, including by way of example wheel alignments; the automotive chassis and power train, including, by way of example the engine, drivetrain, steering and handling, braking, wheel balance, muffler, tires, tubes, batteries and gauges; appliances and components covered by their own manufacturer's warranty including, by way of example the microwave, refrigerator, ice maker, stove, oven, generator, roof air conditioners, hydraulic jacks, VCR, television(s), water heater, furnace, stereo, radio, compact disc player, washer, dryer, inverter and cellular phone; or flaking, peeling and chips or other defects or damage in or to the exterior or finish caused by rocks or other road hazards, the environment including airborne pollutants, salt, tree sap and hail.

### *Events Discharging Warrantor from Obligation Under Warranty*

Misuse or neglect, accidents, unauthorized alteration, failure to provide reasonable and necessary maintenance (See Owner's Manual), damage caused by off road use, collision, fire, theft, vandalism, explosions, overloading in excess of rated capacities, and odometer tampering shall discharge Warrantor from any express or implied warranty obligation to repair any resulting defect.

### *Disclaimer of Consequential & Incidental Damages*

**THE ORIGINAL PURCHASER OF THE MOTORHOME AND ANY PERSON TO WHOM THE MOTORHOME IS TRANSFERRED, AND ANY PERSON WHO IS AN INTENDED OR UNINTENDED USER OR BENEFICIARY OF THE MOTORHOME , SHALL NOT BE ENTITLED TO RECOVER FROM WARRANTOR ANY CONSEQUENTIAL OR INCIDENTAL DAMAGES RESULTING FROM ANY DEFECT IN THE MOTORHOME . THE EXCLUSION OF CONSEQUENTIAL AND INCIDENTAL DAMAGES SHALL BE DEEMED INDEPENDENT OF, AND SHALL SURVIVE, ANY FAILURE OF THE ESSENTIAL PURPOSE OF ANY LIMITED REMEDY.** Some states do not allow the exclusion or limitation of consequential or incidental damages, so the above exclusions may not apply to you.

## *Legal Remedies*

**THESE WARRANTIES ARE NOT INTENDED TO "EXTEND TO FUTURE PERFORMANCE" AND ANY ACTION TO ENFORCE THESE EXPRESS OR ANY IMPLIED WARRANTY SHALL NOT BE COMMENCED MORE THAN NINETY (90) DAYS AFTER THE EXPIRATION OF THE RESPECTIVE WARRANTY COVERAGE PERIOD DESIGNATED ABOVE. THE PERFORMANCE OF REPAIRS SHALL NOT SUSPEND THIS NINETY (90) DAY LIMITATIONS PERIOD FROM EXPIRING. THESE TERMS AND ALL EXPRESS AND IMPLIED WARRANTY DISPUTES BETWEEN WARRANTOR AND PURCHASER SHALL BE GOVERNED BY THE SUBSTANTIVE LAWS OF THE STATE OF INDIANA, WITHOUT REGARD TO CONFLICTS OF LAW RULES.** Some states do not allow the reduction in the statute of limitations or a choice of law provision, so the above reduction in the statute of limitations and/or choice of law provision may not apply to you.

**THIS WARRANTY GIVES YOU SPECIFIC LEGAL RIGHTS. YOU MAY ALSO HAVE OTHER RIGHTS, WHICH VARY FROM STATE TO STATE.**

51903

## WARRANTY INFORMATION FILE

In addition to this Owner's Manual you will find a Warranty Information File in your unit. This file contains valuable documents about your motorhome's systems and equipment. Many of the component manufacturer's warranty registration cards can be found in the box. They will need to be filled out and mailed. Be sure you read and understand all the information in this file to help you safely operate, maintain and troubleshoot those items.

## WOOD FINISH

**Monaco Coach Corporation Wood Finish:**

Because no two trees look alike, authentic woods vary in color and character markings such as streaks, knots and grain patterns. Since the stains may attach differently to these grain patterns,some natural light and dark areas may result. The beauty lies in these natural variations of color and grain that give each cabinet its own individual charm.

The beauty of these products is protected with a furniture-quality exterior finish. After a period of time, there may be minimal changes in the finish color as it ages in its surrounding conditions. This is an inherent characteristic of this particular finish, and the natural aging process adds to the unique appearance of the cabinetry. Due to the minor differences in tone, it may not be possible to match the finish color of existing cabinets exactly when replacing doors or adding additional cabinets at a later date.

***Monaco Coach Corporation***

The foregoing is not a warning. See the Limited Warranty or call (877) 466-6226 for warranty information and limitations.

# 2004 LaPalma - General Information


**SAFETY SYMBOL LEGEND....13**
**INTRODUCTION....14**
**CUSTOMER RELATIONS....15**
**REPORTING SAFETY DEFECTS....15**
**TAKING DELIVERY....15**
Monaco Coach Responsibilities....15
Dealer Responsibilities....16
Customer Responsibilities....16
**SERVICE SUGGESTIONS....16**
Prepare for the Appointment....17
Prepare a List....17
Be Reasonable With Your Requests....17
No Looking Over the Technician's Shoulder....17
Inspect the Work Properly....17
**OWNER'S RECORD - SERIAL NUMBERS....18**
**OWNER'S RECORD - PERSONAL PROPERTY....19**
**OWNER'S RECORD - INSURANCE....20**
**GLOSSARY OF TERMS....21**
**VENDOR LIST....24**
**SURVEY....27**
**WARRANTY TRANSFER APPLICATION....29**

The information contained in this document is intended to reflect standard and optional equipment included in a typically equipped model at the time of delivery to the initial retail owner. Your actual unit may vary from this document as a result of optional equipment that is not generally offered on this model. In the case that you are not the initial retail owner of this unit, this document will not reflect modifications that may have been performed by previous owners.

Product information and specifications are shown herein as of the time of printing. The motorhome manufacturer reserves the right to change product specifications, designs and standard equipment without notice and without incurring obligation.

©Copyright Monaco Coach Corporation. All rights reserved. The LaPalma is a trademark of Monaco Coach. All other trademarks or registered trademarks are property of their respective holders. Brand name products of other companies mentioned in this manual are not endorsed by the manufacturer of the motorhome.

## SAFETY SYMBOL LEGEND

Indicates a **WARNING**. Information pertaining to personal safety and/or potential extensive damage to the motorhome.

Indicates a **CAUTION**. Information pertaining to potential damage to the motorhome and/or its components.

Indicates electrical **DANGER**. Information pertaining to danger or caution of potential electrical shock to person(s) or component(s), and/or risk of electrical fire to motorhome.

Indicates **FLAMMABLE** or **EXPLOSIVE**. Information concerning fire or explosive material pertaining to personal safety and/or protection of the motorhome and its components.

Indicates **POISON**. Information pertaining to safety and/or use of a poisonous substance or harmful chemical.

Indicates a **NOTE**. Information and reminders concerning operation of motorhome and/or components.

Indicates **INSPECT**. Inspection of the motorhome and/or its components is required. Additional instruction may follow.

Indicates **LUBE**. Lubrication, or addition of lubricant product, to the motorhome and/or a specified component or part is required. Additional instruction may follow.

Indicates **ASSEMBLE/REPAIR**. Assembly, disassembly or installation of a component or part, and/or repair to the motorhome may be required. Assistance of Technical Support or Technician may be necessary.

Indicates **INFO (Information)**. References to additional information regarding operation of the motorhome and/or its components found in additional sources other than the Owner's Manual. Also refers to the WARRANTY INFORMATION FILE, found within the Warranty Information Box inside the motorhome.

Indicates a **TIP**. Information regarding helpful hints and/or suggestion for ease of operation of the motorhome and/or its components.

## INTRODUCTION

This section contains warranty information and knowledge for the operation and care of the motorhome. Not all information may be applicable to your model of motorhome. More detailed information with CAUTION or WARNING instructions, other than what is found in this chapter, can be found in the manufacturer's owner manuals located in the owner information box.

Changes, additions and supplemental information in the form of Manual Addendums can be obtained by visiting our Website at www.monacocoach.com. Select one of the products from the product lineup. Go to the Service menu. A submenu will appear. Browse our other product lines Technical Tips. These Tips may not completely apply to your particular model but information contained therein can be useful.

In time you will develop a knack for spotting wonderful little roadside locations by turning off the main highway and exploring. There are many modern recreational vehicle parks (including state, county and federal parks) with good facilities where you can obtain hook-ups for electrical, water and sewage connections. Directories are published which describe these parks and the availability of services and hook-ups. On overnight or weekend trips, chances are you will probably not fill up the sewage holding tanks, deplete the water or LP-Gas supply, or run down the batteries which supply the living area with 12 Volt DC current. On longer trips, when you have stayed where sewer connections and utility hook-ups were not available, it will be necessary to occasionally empty the holding tanks and replenish the water and LP-Gas supply.

Many gas stations have installed sanitary dumping stations. Publications are available which list these dumping stations. When stopped for the night, the motorhome is built to be safely parked in any spot that is relatively level and where the ground is firm. Try to pick as level a parking spot as possible. Your facilities are with you and the motorhome is fully self-contained.

Many of the safety alert symbols are "Personal Safety Instructions." Definitions for the symbols are located on a previous page under "Safety Symbol Legend." It is important to thoroughly read and understand these safety instructions where the symbols are displayed throughout the manual. Failure to comply with specific instructions may result in personal injury or death. Many instructions are required by National Safety Associations.

## CUSTOMER RELATIONS

Only by ensuring your confidence and satisfaction with our products and services can we have continued success as a manufacturer of motorhomes. We believe a good relationship with our customers is just as important as improving the technical excellence of our products. Your authorized dealer is pleased to help you with instructions about your motorhome and to offer service when you need it. If problems remain after you have consulted your dealer you are invited to contact our Customer Service Department. Please have all pertinent information (serial numbers, model number, etc.) when calling. We will work with the dealer and see that every attempt to resolve the matter is made.

**Customer Service Department**
**91320 Coburg Industrial Way**
**Coburg, OR 97408**
**877-466-6226**

## REPORTING SAFETY DEFECTS

If you believe that your motorhome has a defect which could cause a crash or could cause injury or death, you should immediately inform the National Highway Traffic Safety Administration (NHTSA) in addition to notifying Monaco Coach. If NHTSA receives similar complaints, it may open an investigation, and if it finds that a safety defect exists in a group of motorhomes, it may order a recall or remedy campaign. However, NHTSA cannot become involved in individual problems between you, your dealer or Monaco Coach. To contact NHTSA you may either call the Auto Safety Hot line toll-free at 1-800-424-9393 (or 1-202-366-0123 in the Washington D.C. area) or write to:

**NHTSA**
**U.S. Department of Transportation**
**400 Seventh Street**
**Washington, DC 20590**

## TAKING DELIVERY

### *Monaco Coach Responsibilities*

Your motorhome has been manufactured to the highest quality and standards by factory trained personnel. Quality inspections are performed throughout the manufacturing process of your motorhome. The motorhome has been carefully and almost completely hand assembled in our factory. Prior to the motorhome arriving at the dealership, all systems have been carefully tested and inspected to ensure optimum performance. The necessary forms and required manuals have been placed in the motorhome at the time of shipment to the dealership.

## *Dealer Responsibilities*

The dealer must perform additional pre-delivery inspections and system checks, assist in the customer's understanding of the Limited Warranty and assist in completing any necessary forms. They must do a customer orientation to the motorhome, its systems, components and their operation.

The dealer should also ensure the customer receives a complete Owner's Packet with warranty cards and registrations for the motorhome and for separately warranted products, including detailed operating and maintenance instructions. The dealer is responsible for performing a review of the Limited Warranty provisions with the customer, while stressing the importance of mailing warranty cards and registrations to the manufacturers within the prescribed time limit to avoid loss of warranty coverage. They must assist the customer in completing these forms and locating serial numbers. They should request that the customer read all warranty information when possible and explain any provision not clearly understood.

The dealer should instruct the customer on how to obtain local and out-of-town service on the motorhome and its various individual warranted components, whether the service is warrantable or out of warranty.

## *Customer Responsibilities*

As a new motorhome owner you are responsible for regular and proper maintenance. This will help you prevent conditions arising from neglect that are not covered by your Monaco Rambler Limited Warranty. Maintenance services should be performed in accordance with this Owner's Manual, and any other applicable manuals. As the owner, it is your responsibility and obligation to return the motorhome to an authorized dealer for repairs and service (see the Limited Warranty). Since the authorized dealer where you purchased your new motorhome is responsible for its proper servicing before delivery, and has an interest in your continued satisfaction, we recommend that Inspection, Warranty and Maintenance Services be performed by the dealership. We suggest that you take your new motorhome on a weekend shakedown before leaving on an extended trip.

## SERVICE SUGGESTIONS

Know when to take your motorhome in for service. Give some thought to the appointment time. There are several things to consider when selecting a time for service. Location of the service center and the time of year can be a major issue. Monday and Friday are busy days for most dealers. Therefore, it makes sense to make a mid-week appointment whenever possible. Ask your dealer if additional time is needed for check in and completion of paperwork.

### Prepare for the Appointment

If you are having warranty work done, be sure to have your warranty registration papers with you. All work to be performed may not be covered by the warranty; be sure to discuss additional charges with the service manager. Keep a maintenance log of your motorhome service history. This can often provide a clue to the current problem.

### Prepare a List

Make a written list of specific repairs needed. It is important the service manager be aware of all previous work which has been done on your motorhome. For example: if the motorhome has been repaired due to an accident. While this may not seem important, it could have a significant effect on the dealer's diagnosis of a problem.

### Be Reasonable With Your Requests

Don't leave a list of 20 items to be serviced and expect to have the motorhome back by 5:00 p.m. If you list a number of items, and must have your motorhome back by the end of the day, discuss the situation with the service manager and list items in order of priority. Some items may not be able to be repaired due to work loads or parts availability. Expect to make a second appointment for work not completed or for the long, drawn-out repair item.

### No Looking Over the Technician's Shoulder

Please don't be offended when you are told you cannot watch the work being done. Many service area insurance requirements forbid the admission of customers into the service work area.

### Inspect the Work Properly

Check out the service or repair job when you pick up your motorhome and notify the service manager of any dissatisfaction. If circumstances prevent returning for immediate corrective work, make an appointment as soon as possible.

.

FOR YOUR OWN REFERENCE

# OWNER'S RECORD - SERIAL NUMBERS

**INFORMATION: Many of the serial numbers for various items and components are filed on the Data Card located in the Warranty Information File box. Refer to the Manufacturer's individual Owner's Manuals for serial number locations that are not listed below.**

**Motorhome** Serial Number _____

**Motorhome** Federal Vehicle Identification Number (VIN) _____

**Entry Door Key** Number _____

**Compartment Door Key** Number_____

**Cooktop/Range** Model & Serial Number _____
(Located under top burner plate)

**Microwave** Model & Serial Number_____
(Located behind door on case)

**Refrigerator** Model & Serial Number _____
(Located inside refrigerator compartment)

**Generator** Model & Serial Number_____
(Located in outside compartment on generator)

**Roof Air Conditioner(s)** Model & Serial Number_____
(Located under top cover on air conditioner)_____

**Inverter** Model & Serial Number_____

FOR YOUR OWN REFERENCE

# OWNER'S RECORD - PERSONAL PROPERTY

| Item | Serial Number | Value |
| --- | --- | --- |
| | | |
| | | |
| | | |
| | | |
| | | |
| | | |
| | | |
| | | |
| | | |
| | | |
| | | |
| | | |
| | | |
| | | |
| | | |
| | | |
| | | |
| | | |

FOR YOUR OWN REFERENCE

# OWNER'S RECORD - INSURANCE

Company: _____

_____

Policy #: _____

_____

Agent's Name & Address: _____

_____

Business Phone #: _____

_____

Emergency Phone #: _____

_____

Renewal Date(s): _____

_____

Notes: _____

_____

_____

_____

_____

_____

**AC Electricity -** Alternating current also known as household power.

**Ampere (Amp) -** The unit of measure of electron flow rate of current through a circuit.

**Ampere-hour (Amp-hr. AH) -** A unit of measure for a battery electrical storage capacity, obtained by multiplying the current in amperes by the time in hours of discharge. (Example: A battery which delivers 5 amperes for 20 hours, delivers 5 amperes times 20 hours, or 100 Amp-Hr. of capacity.)

**Black Water -** Term associated with the sewage holding tank. The toilet drains directly into this tank.

**Chassis Battery -** Powers chassis 12 Volt accessories and starts engine.

**Circuit -** An electric circuit is the path of an electric current. A closed circuit has a complete path. An open circuit has a broken or disconnected path.

**City Water -** A term associated with the water supply that you hook-up to at campgrounds. It is called city water because water is pulled from a central source (like in a city) and not the fresh water tank.

**Curbside -** This refers to the side of the motorhome which faces the curb when it is parked. Often called the door side or the passenger's side.

**Current - Alternating (AC) -** A current that varies periodically in magnitude and direction. A battery does not deliver alternating current. Also referred to as shore power, utility power, inverter power, generator power, etc.

**Current -** The rate of flow of electricity or the movement rate of electrons along a conductor. It is comparable to the flow of a stream of water. The unit of measure for current is the ampere.

**Cycle -** In a battery, one discharge plus one recharge equals one cycle.

**DC Electricity -** Direct current also known as battery power.

**Direct Current (DC) -** Power that is stored in a battery bank or supplied by photovoltaics, alternator, chargers and DC generators.

**Drain Trap -** This is a curve that is in all drains. Water is trapped in the curve and this creates a barrier so tank odors cannot escape through the drain.

**Dry Camping -** Camping in the motorhome when there is no city water hook-up or shore power. In other words, using only the water and power that is in the motorhome and not from another source.

**Dump Station -** A site where the waste (grey) and sewage (black) tanks can be drained. In most states it is illegal to drain waste tanks anywhere other than at a dump station.

**Dump Valve -** Another name for the T-handle valve used to drain the sewage (black) and waste (grey) tanks.

**Egress Window -** The formal name for the emergency window located in the rear of the motorhome. Egress windows can be easily identified by their red handles.

**Full Hook-Up Site -** A campground that has city water, shore power and sewer hook-ups or connections available.

**Grey Water -** Term associated with the waste water holding tank. Water from the sink drains, the shower and the washer/dryer (if equipped) go into this tank.

**House Battery -** Powers 12 Volt lights and accessories inside motorhome.

**LED -** (Light Emitting Diode) Indicator light.

**Low Point Drain -** The lowest point in the plumbing. Drains are placed here so that water will drain out of the lower end of the motorhome. These drains must be closed when you fill the water tank.

**OHM -** A unit for measuring electrical resistances.

**Ohm's Law -** Express the relationship between Volt (E), amperes (I) in an electrical circuit with resistance (R). It can be expressed as follows: E = IR. If any two of the three values are known, the third value can be calculated by using the above formula.

**Pounds Per Square Inch Gauge (psig) -** Pressure measured with respect to that of the atmosphere. This is a pressure gauge reading in which the gauge is adjusted to read zero at the surrounding atmospheric pressure. It is commonly called gauge pressure.

**Roadside -** This refers to the side of the motorhome which faces the road when it is parked. Often called the off-door side or the driver's side.

**Shore Line -** This is the electrical cord which runs from the motorhome to the campground 120 Volt electrical supply.

**Shore Line Plug -** The 120 Volt outlet allows the motorhome to be hooked up to a campground facility.

**Stinger -** An arm attachment on a tow truck that is used to lift motorhome slightly so that it can be towed.

**Volt -** The unit of measure for electric potential.

**Watt -** The unit for measuring electrical power, i.e. the rate of doing work, in moving electrons by or against an electric potential.

**Wet Cell Battery -** A type of battery that uses liquid as an electrolyte. This type of battery requires periodic maintenance such as cleaning the connections and checking the electrolyte level.

## VENDOR LIST

**Air Bags**
Firestone
317-818-8600
www.bridgestone-firestone.com

**Air Conditioner**
SCS/Frigette
800-545-6341
www.scsfrigette.com

**Air Conditioner - Roof**
Dometic Corp
(574) 463-4858
www.dometic.com

**Alternator**
Leece-Neville
800-349-2628
www.prestolite.com

**Awnings**
Carefree
800-338-2378
www.carefreeofcolorado.com

**Batteries**
Interstate
800-272-6548
www.interstatebatteries.com

**Carbon Monoxide Detector**
Safe-T-Alert
800-383-0269
www.safe-t-alert.com

**Cooktop**
Atwood Products
800-873-4328
www.atwoodmobile.com

**Dash Radio**
Magnadyne
800-638-3600
www.magnadyne.com

**DVD Player (Optional)**
RCA
877-266-2728
www.rca.com

**Entry Step**
Kwikee
800-736-9961
www.kwikee.com

**Exterior Grill**
Vitco
877-736-2635
www.vitco.com

**Fan - Bathroom Exhaust**
Fan-Tastic Vent
800-395-4045
www.fantasticvent.com

**Fire Extinguisher**
The Fire Extinguisher Co.
919-563-4911

**Furnace**
Atwood
800-873-4328
www.atwoodmobile.com

**Generator**
Onan
800-888-6626
www.onan.com

**Inverter**
*1500 W*
Xantrex Technology
800-446-6180
www.xantrex.com

*130 W*
Dimensions Unlimited Inc.
651-653-7000

**Leveling Jacks - Hydraulic**
Power Gear
800-334-4712
www.powergear.com

**Liquefied Petroleum Protectors**
MTI Industries, Inc.
800-383-0269
www.mtiindustries.com

**LP Tank**
Manchester Tank
800-877-8265
www.mantank.com

**Microwave**
Sharp Electronics Corp.
800-237-4277
www.sharp-usa.com

**Outside Mirrors**
Velvac Mirror
800-783-8871
www.velvac.com

**Rear Vision System**
Sony
800-222-7669
www.sony.com

**Refrigerator**
Norcold
800-543-1219
www.norcold.com

**Slide-Out Motors**
Power Gear
800-334-4712
www.powergear.com

**Television**
RCA
877-266-2728
www.rca.com

**Television Antenna**
Winegard
319-754-0600
www.winegard.com

**Tires**
Goodyear Tire & Rubber
800-399-2772
www.goodyear.com

**Toilet**
Sealand
800-321-9886
www.sealandtechnology.com

**Transfer Switch**
Iota Engineering
800-866-4682
www.iotaengineering.com

**VCR**
RCA
877-266-2728
www.rca.com

**Water Filtration**
Hydro Life
800-626-7130
www.hydrolife.com

**Water Heater**
Atwood Mobile Products
800-873-4328
www.atwoodmobile.com

**Washer/Dryer (Optional)**
Splendide
(503) 655-2563
www.splendide.com

**Water Pump**
Shurflo
800-854-3218
www.shurflo.com

## MANUAL ADDENDUMS

**www.monacocoach.com**

Click **ENTER** to enter the main web page.
Then click on the **SERVICE** link and choose
**MANUAL ADDENDUMS** from the drop down menu.

## TECH TIPS

***FIND CURRENT AND ARCHIVED TECH TIPS WITH ANSWERS TO FREQUENTLY ASKED QUESTIONS AT:***

***WWW.MONACOCOACH.COM***

***CLICK ON ENTER TO ACCESS THE MAIN WEB PAGE. THEN CLICK ON THE SERVICE LINK AND CHOOSE TECH TIPS FROM THE DROP DOWN MENU.***

## LAPALMA 2004

Your suggestions are very important to us and we are continually striving to improve the quality of our manuals. After becoming familiar with your new recreational vehicle and the accompanying manual, please take the time to answer the following questions. When you are finished please return the survey via mail to our Technical Publications Department, or you may fax the survey to (541) 681-8031, Attention: Technical Publications Department. Feel free to attach an additional page if you desire.

**1. Is this your first recreational vehicle? YES / NO**

**2. Was the overall appearance and lay-out of this manual what you expected to see in your new recreational vehicle?**

_____
_____
_____
_____
_____

**3. Was the information within this manual helpful in acquainting you with your new recreational vehicle? If not please address any area(s) we need to expand or improve on.**

_____
_____
_____
_____
_____

**4. Were the operating instructions clearly written, and were you able to follow the steps without any difficulty?**

_____
_____
_____
_____
_____

**5. Is there any additional information you would like to see incorporated within the owner's manual?**

_____
_____
_____
_____
_____

**NAME:** _____ **PHONE:** (_____)_____
**ADDRESS:** _____
**SERIAL #** _____

CUT ALONG DOTTED LINE

FOLD

Place
Postage
Here

**TECHNICAL PUBLICATIONS PLANT #17**
**MONACO COACH CORPORATION**
**91320 COBURG INDUSTRIAL WAY**
**COBURG, OR 97408-9908**

FOLD

CUT ALONG
DOTTED LINE

# Limited Warranty Transfer Application

Mail Monaco Coach Limited Warranty Transfer Application to:

Monaco Coach Corporation
Warranty Transfer
91320 Coburg Industrial Way
Coburg, OR 97408

Please read terms and representations below before signing.

DEALER IMPRINT

**A** PRIOR OWNER INFORMATION

TRANSFER COVERAGE FROM:

FIRST NAME | INITIAL | LAST NAME | VEHICLE IDENTIFICATION NUMBER

**B** NEW OWNER INFORMATION

TRANSFER COVERAGE TO:

FIRST NAME | INITIAL | LAST NAME | TELEPHONE NUMBER

STREET ADDRESS | DATE OF TRANSFER

CITY | STATE | ZIP | ODOMETER READING AT TRANSFER

**C** SIGNATURES

NEW OWNER'S SIGNATURE | SELLING DEALER SIGNATURE

## TERMS & REPRESENTATIONS

By your signature(s) on this form, and in order to induce Monaco Coach Corporation to transfer its Limited Warranty, you represent the following:

1. That you have received and read a copy of the Limited Warranty.
2. You understand that the unit is to be used only for family camping and cross country travel on improved roads.
3. All information provided by you on this form is true and correct.
4. You understand that you are purchasing a pre-owned recreational vehicle and Monaco Coach Corporation does not make any representation as to its present condition.
5. You understand that the Limited Warranty does not cover the chassis, component parts and appliances if they are covered by a separate warranty issued by the chassis, component part or appliance manufacturer.

# 2004 LaPalma - Driving & Safety


**DRIVING & SAFETY .....33**
Inspections.....33
Familiarize Yourself.....33
Safety Seat Belts .....34
Tips for Driving.....37
**COMPASS & OUTSIDE TEMPERTURE SYSTEM .....40**
**PRE-TRIP PREPARATIONS - CHECKLIST.....42**
**HITCH - USING THE REAR RECEIVER.....45**
Tow Plug Connection.....47
**REAR VIEW SYSTEM (OPT) .....47**
**BACKING UP A MOTORHOME.....49**
Brake - Parking.....51
**LEVELING SYSTEM (OPT).....51**
**SET-UP PROCEDURES - CHECKLIST.....54**
**DRY CAMPING.....56**
**BREAKING CAMP.....59**
**EMERGENCY PROCEDURES - ROADSIDE .....60**
Light - Retractable.....61
Transmission - Rocking Out.....61
Jump Starting.....62
**TOWING PROCEDURES.....65**
**TIRES.....66**
Importance of Air Pressure.....67
Tire Pressure Inflation Guideline.....68
Tire Chart -Goodyear.....69
Inspecting & Pressure .....70
Air Pressure Checklist.....72
Supporting When Leveling.....73
Tire Vibration.....74
Tire Rotation.....74
Tread.....74
Tire Care .....75
In Case of Flat Tire .....75
Storage of Tires - Long Term.....77
**WEIGHING THE MOTORHOME .....78**
Weight Label .....82
Four-Corner Weighing (Example) .....83
Example Tire Chart.....86
**VIEWS ..... 93**
Front .....93
Rear ..... 93
Roadside..... 94
Curbside ..... 94
**SPECIFICATIONS - DIMENSIONS CHART..... 95**
**SMOKE DETECTOR .....96**
Operation .....96
Testing .....96
Maintenance.....97
Troubleshooting.....97
**LP-GAS DETECTOR.....98**
Testing .....99
Alarm .....99
Maintenance.....100
**CARBON MONOXIDE DETECTOR.....101**
Operation .....102
Alarm .....102
Testing .....103
Cleaning .....103
Troubleshooting.....103
**FIRE EXTINGUISHER.....104**
**EGRESS EXIT WINDOW .....104**

## DRIVING & SAFETY

This section contains information on driving tips, emergency situations, towing, safety devices, weighing the motorhome and tires.

### *Inspections*

There are significant differences between a passenger automobile and a motorhome. Always be aware of these differences when traveling. The key to safely operating a motorhome is inspection. Any defect found could result in problems on the road that may cause lost time and money. Several states require that the motorhome be inspected prior to registration. Know and observe the laws of the state(s) in which you will be traveling. Laws may vary from state to state. A systematic inspection conducted prior to moving the motorhome will ensure nothing is overlooked and will assist in familiarizing the owner with the motorhome. Prior to moving the motorhome perform a general inspection which includes examining the condition of the vehicle and the surrounding area of the motorhome for hazards. Look high and low when walking around the motorhome.

### *Familiarize Yourself*

The location of the driver's seat in the motorhome is higher and further to the left than most vehicles. This creates a different perspective of the roadway. Rely on the outside mirrors to line up with the center of the road and to check the conditions behind the motorhome. The dashboard may contain more gauges and controls than are normally found in passenger automobiles. Become familiar with these gauges and their indications before starting out.

## *Safety Seat Belts*

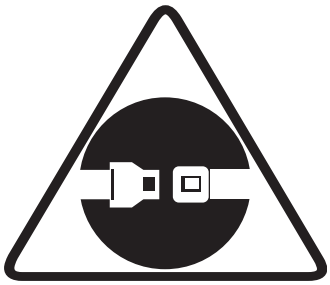

seatbelt

All occupants must be furnished with and use seat belts while the motorhome is moving. The driver's seat, and all other seats designed to carry passengers while the motorhome is in motion, are equipped with safety seat belts. Do not occupy beds or any seats that are not equipped with a safety belt while the motorhome is in motion. Safety belts are supplied at affixed seating positions. The driver's seat must be locked in the forward facing position while motorhome is in motion. Do not use a seat belt on more than one person.

To fasten the seat belt, pull the belt out of the retractors and insert the tab into the buckle; you will hear a click when the tab locks into the buckle. Seat belt lengths automatically adjust to size and sitting position. Do not route belts over armrest.

**WARNING: Safety belts are supplied at affixed seating positions. Do not occupy seats not equipped with safety belts while the motorhome is in motion. Do not use a single seat belt on more than one person. Pilot and Co-pilot seats must be locked in a forward facing position with seat belts fastened while the motorhome is in motion. Avoid seat rotation while in transit.**

**Child Safety Seat:**

Children that fit into example 1 and example 2, as shown on the following pages, require the use of a child safety seat. In the motorhome, the child safety seat can be positioned in two places. On the front passenger (co-pilot) seat and on the forward facing permanently mounted booth dinette seat.

**WARNING: Children must not be transported unrestrained. Infants must be placed in approved safety seats. Small children must be restrained in child safety seats. Failure to comply with these rules can lead to injury or death.**

**NOTE: Individual states and Canadian provinces may prohibit use of a safety or booster seat in the front seat.**

**A child safety seat is required for a child:**

- From birth to one year, or up to 21 pounds, the child is considered an infant. A (convertible) safety seat for an infant must be secured facing rearward. The top of the head must be below the top of the safety seat. Secure safety seat harness straps at or below the shoulders. (**See Example 1**).

- Children over 40 pounds (ages 4 to 8) unless over 4' 9" require a booster seat. The booster seat places the child's waist and shoulders at the proper height for the supplied safety belt to be effective. The top of the head must be below the top of the safety seat. (**See Example 2**).

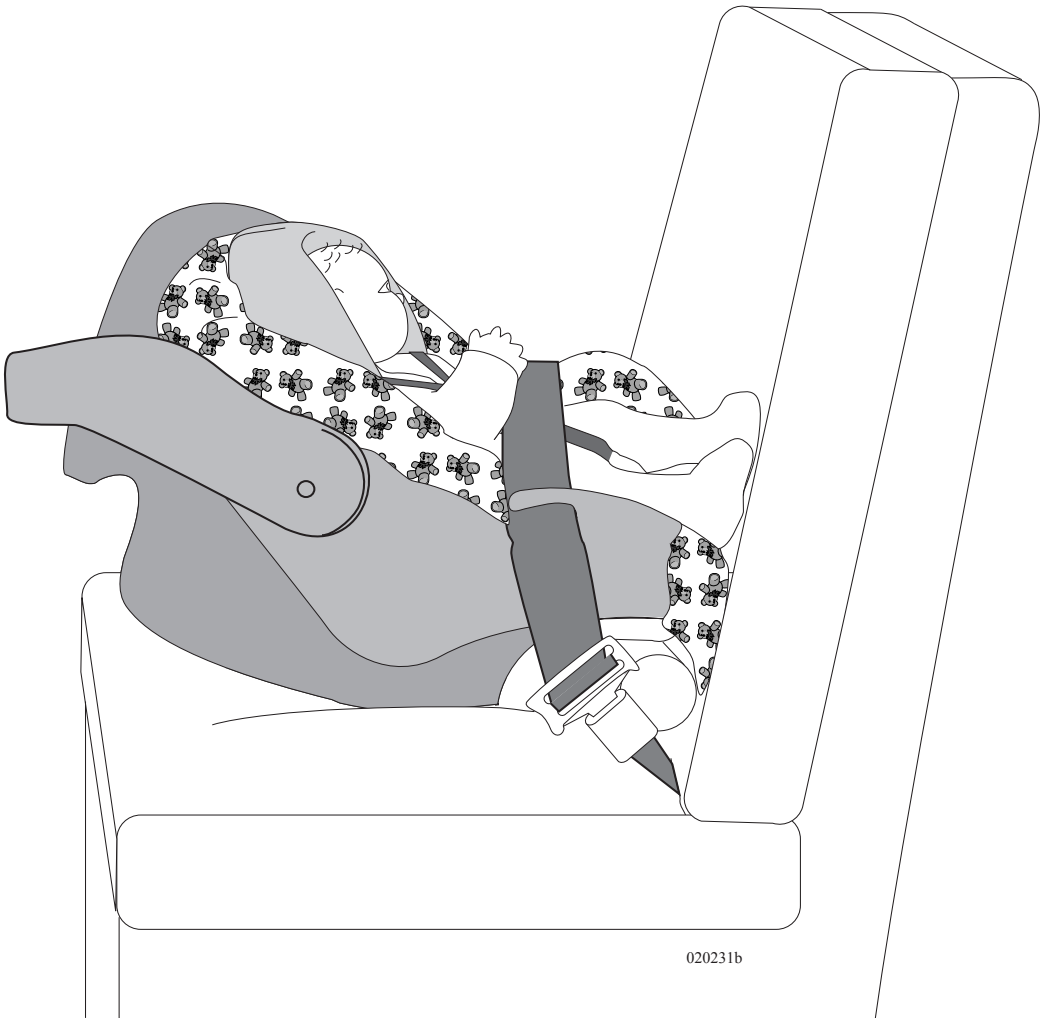


***Example 1: Convertible Seat Facing to the Rear.***

*Example 2: High back booster seat facing forward.*

**CAUTION: Installation illustrations are for reference only, and are not to be used as a guide. Refer to the safety seat manufacturer's guide.**

**WARNING: Because there are many styles of safety and booster seats, refer to the manufacturer's manual for proper installation and how to properly secure the safety or booster seat.**

**CAUTION: Seat belts must only be used on permanently mounted seats. Do not use a single seat belt on more than one person.**

**NOTE: Individual states and Canadian provinces may have laws that can exceed the requirements described above. It is your obligation to know and comply with the laws in the state or province in which you travel.**

**Seat Belt Care:**

Keep the belt clean and dry. To clean, use a mild soap and lukewarm water. Never use bleach, dye or abrasive cleaners as they may weaken the belt. Inspect the belts periodically. Check for cuts, frays or loose parts. Replace any damaged parts. Do not disassemble or modify the system. Replace the belt assembly if it has been in a severe impact, even if damage is not obvious.

## *Tips for Driving*

The motorhome is a complex vehicle and requires an increased level of driving awareness because of its size and various components. Due to the motorhome length the turning radius will be much wider than that of a standard automobile. Always pay close attention to all perimeters of the motorhome: front, sides, rear, roof and undercarriage. Insure the surrounding area is clear of obstacles. Utilize the driving mirrors to observe traffic conditions as well as the motorhome exterior: tires, bay doors, blind spots, etc. Use a push-pull method of steering, with both hands parallel on the steering wheel. The motorhome is also heavier than an automobile with a higher center of gravity. These factors affect the reaction time of the motorhome. Swerves and sharp turns, especially performed at high speeds, could result in the loss of control of the motorhome. Keep the size of the motorhome in mind and drive with extra caution to avoid situations which might require quick momentum changes. Increase reaction time by paying attention to traffic and road conditions 12-15 seconds ahead of the motorhome's position.

The motorhome will travel safely and comfortably at highway speed limits. However, it takes more time to reach highway speed. When passing another vehicle, allow extra time and space to complete the pass due to the added length of the motorhome. When descending a long hill, use the exhaust or engine brake. The transmission and engine will help control downhill speed and can extend the service life of the brake lining. The distance required to stop the motorhome is greater than an automobile. The brakes are designed for the (GVWR) Gross Vehicle Weight Rating. Practice stopping away from traffic to get the "feel" of the distance required to stop the motorhome.

When backing up, have the co-pilot stand at the road side rear corner so the co-pilot remains visible in the roadside mirror. The co-pilot can watch for any obstacles and give hand signals during the backing up process. When traveling, make sure bridges being crossed can support the weight of the motorhome. Check the tonnage limit of the bridges before crossing. Signs should be posted at bridge entrances. Check the posted height of all overpasses or situations where overhead clearance is limited. Keep in mind, road surfaces may have been repaved or become packed with snow and therefore the actual posted clearance height would not apply in such conditions.

**Driving Cautions:**

- Avoid getting too close to the edge of the road, a soft shoulder may not support the weight of the motorhome.
- Side spacing is best maintained by keeping the motorhome centered in the driving lane.
- Driving lanes in work zones can be uneven, congested and narrower than usual.
- Be cautious of road debris which can damage the undercarriage of the motorhome or become lodged in the dual tires causing damage to the tires, wheel rims or tow car.
- Keep in consideration that posted speed signs are passenger automobile rated. Therefore, an extra awareness of the driving conditions and appropriate speed for a motorhome are necessary, especially on corners and mountain roads.
- Downgrade speed should be at least 5 mph less than upgrade speed, or downgrade speed should be attainable within three seconds of a brake application.
- Use a four second rule when following other vehicles at speeds under 40 mph. Use a five second rule when following at speeds over 40 mph.

**Right Turns:**

Negotiating a right hand turn in a motorhome can be difficult. Many drivers fear they can not make the turn without entering into the other lane or jumping the curb. Here are a few tips to make a right hand turn easier:

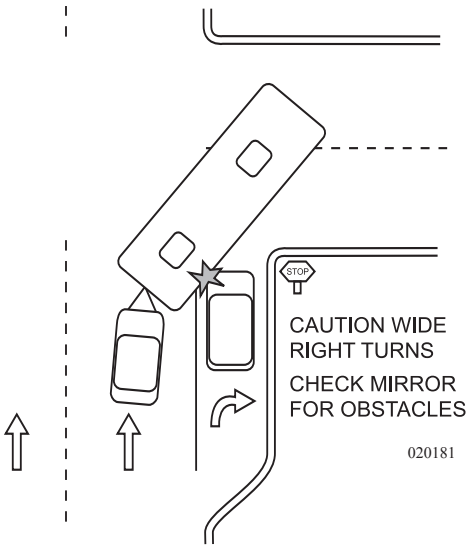


- As the turn approaches, look into the mirror to ensure the lane to the left is clear, then move wide over to the left.
- When you are about to make the turn; the left rear wheel should touch the center line of the road and your hips should be parallel to the roadside curb of the corner being turned. This will aid in avoiding a premature turn.
- Make the turn slowly.
- Check mirrors frequently being aware of the motorhome's necessary clearance and space management while negotiating the turn.

**Left Turns:**

- Do not start the turn until the center of the intersection is reached with your hips. If there are two lanes available, take the right hand lane. A car or driver on the left hand side is easier seen.

**Night Driving:**

- As always be well rested and alert when driving. If necessary, find a safe stopping place to rest until ready to continue.
- Avoid using any interior lights while driving. They can create a glare on the windshield, decreasing visibility.
- Dim the dash lights to a comfortable level to reduce the level of glare.

**Extreme Heat and Hot Weather Conditions:**

- Observe all gauges frequently. Any variations from the normal conditions should be evaluated promptly.
- Check tire pressure frequently when traveling in hot conditions. Tire air pressure increases with heat. It is not advisable to let air out of a hot tire. When the tires cool down they will return to the correct/previous tire pressure.
- Pay extra attention to hoses and belts which are more susceptible to fatigue in extreme heat.

**Winter and Cold Climate Conditions:**

- The motorhome should be prepared for Cold Weather Use.
- Keep speeds slow and steady. Make moves gradually and increase visual distance for a gain in reaction time.
- If road or weather conditions are treacherous find a safe stopping place and wait for conditions to improve.
- Avoid using an engine retarding device on wet or slippery surfaces, which can cause the drive wheels to skid.
- Wipers should be in good condition and the washer reservoir should have sufficient window wash fluid that has antifreeze included within it.
- Use the mirror heat to keep the mirrors clear.
- Remove any ice build-up from the entry step to avoid accidental slipping.

**Wet Conditions:**

- The risk of hydroplaning is increased if tires are worn or improperly inflated.
- Be aware that heavy rain or deep standing water can affect brake application causing them to apply unevenly or grab.

**Refueling:**

- Truck stops are good refueling points for motorhomes.
- For your convenience there is a fuel port located on either side, near the front of the motorhome.
- Check overhead clearance heights before pulling through the fuel island.
- Be aware of the concrete/steel posts installed around the fuel island.
- Avoid running over the fuel hose as it can get hung up on the motorhome, causing body damage.
- Use of gloves is recommended for refueling. Store the gloves in the outside compartment.

**WARNING: Avoid the risk of fire or explosion. Turn off all pilot lights and appliances before entering a refueling station.**

## COMPASS & OUTSIDE TEMPERATURE SYSTEM

Unit has two buttons, "MODE" and "F/C", which are used to change the unit between various operations.

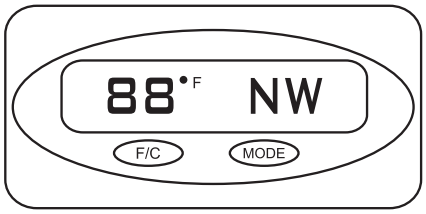


080268b

**Ignition ON Operation:**

- Unit displays temperature and heading.
- Press the **F/C** button to toggle between Fahrenheit and Centigrade.
- When unit has been properly calibrated, the heading will remain ON. If the unit is not properly calibrated, the work CAL will flash.

**Calibration/Zone Procedures:**

- Press and hold the **MODE** button for 10 seconds until the words ZONE and CAL appear. The unit will display the current zone value.
- Press the **F/C** button to increment the zone value.
- Press the **MODE** button to store the zone value.

- The unit will display the word CAL. Press the F/C button to enter the calibration mode. The unit will begin to count down from 60 seconds and the word CAL will flash. The driver should slowly drive in a circle during the 60 second count down. If the calibration failed, the unit will continue to flash CAL. Repeat this step if necessary. If calibration was successful, the unit will display the word CAL for five seconds and then return to Ignition ON Operation.
- When you travel outside the set zone, the compass may have reduced accuracy. To change the zone, repeat the first three steps of this procedure. After the new zone is set, press the MODE button to skip calibration. It is not necessary to recalibrate the compass when you change the zone value.

**Sleep Mode Operation:**
- Unit enters sleep mode when ignition switch is turned OFF.
- The display is blank and the unit is in a Low Power Mode.
- Unit awakens when the ignition switch is turned ON or enters CAMPING MODE when the F/C button is pressed for three seconds.

**Camping Mode Operation:**
- Unit enters Camping Mode after the F/C button is pressed for three seconds while unit is in Sleep Mode. Unit will display temperature and heading for ten seconds and then return to Sleep Mode.
- Repeat procedure as desired.

**Nighttime Dimming:**
- Display brightness will dim by 50% when headlights are turned ON.

## PRE-TRIP PREPARATIONS - CHECKLIST

The following list highlights items that need to be checked on the motorhome before traveling. Prior to departing, several items will need to be prepared. Some suggestions are listed below. Use the list as general guidelines when preparing to depart. By doing so, there is a better chance of not facing problems during the trip. For chassis maintenance details, please refer to the chassis section.

**Items To Carry:**

- Local, State and National Maps. Truck atlases can be useful for showing maps, refueling stations and truck repair facilities.
- An emergency road kit containing a flashlight, road flares, warning signs and a fire extinguisher.
- Potable/non-potable water hoses and a water pressure regulator.
- Hand tools.
- 12 Volt DC test light and a 110 AC Polarity Tester. These may be helpful when on the phone with a technician.
- A battery hydrometer to check the condition of battery electrolyte.
- A spare 12 Volt continuous duty solenoid (if applicable).
- An assortment of spare fuses.
- A spare alternator belt.

**Interior Items:**

- Start refrigerator operation the night before departure to get a head start on the cooling process. Pre-cool items prior to loading the refrigerator.
- If necessary, load pots, pans, utensils, soap, linens, etc.
- Secure and fasten the bi-fold and pocket doors. Lock the shower door.
- Close roof vents and windows.
- Secure any loose, heavy or sharp objects in case of a sudden stop.
- Close all cabinet doors and drawers.
- Walk the interior and check for items not secured.
- Turn interior lighting off.
- Test the appliances before leaving home.

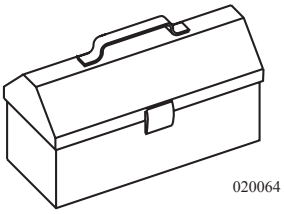


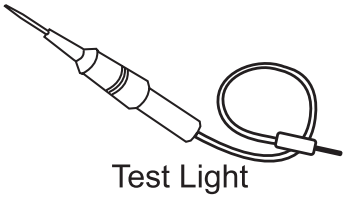


090333e

**Exterior Items:**

- Check operation of all exterior lights, headlamps, taillights, brake and clearance lights.
- Check the battery fluid level of Liquid Lead Acid batteries.
- Check all fluid levels on the chassis and generator.
- Adjust the mirrors.
- Check the windshield wipers.
- Fill the LP-Gas tank.
- Test the generator.
- Make sure the following items are in the motorhome: sewer connection hose, water fill hose, awning rod and electrical adapters.

**Engine Checklist:**

- Inspect the engine, transmission and engine compartment for fluid leaks.
- Inspect the area under the motorhome for fluid leaks or puddles.
- Check all fluid levels, oil, antifreeze, transmission, hydraulic fluid and washer fluid.
- Inspect belts and hoses for wear.
- Inspect wiring for loose, frayed or corroded connections.
- Start engine and listen for any unusual noises.

**Driving Preparations:**

- Inspect fluid level (if applicable) in oil bath hubs.
- Fill the water tank and make sure the waste tanks are empty. Test the water pump.
- Disconnect and store the fresh water hose.
- Check all tire pressures.
- Inspect tires for cuts, punctures, weather damage or cracks in the sidewalls and tread areas.
- Check for foreign objects lodged between dual tires.
- Make sure all lug nuts are tightened to their proper torque setting.
- Secure all awning locks.
- Check storage bays to prevent shifting or damage to items.
- Outside compartment doors should be closed and locked.
- Look around, above and under the motorhome for obstructions.
- Check fuel level gauge. Fill the fuel tank if necessary.
- Check all other dash gauges for operation and correct level indications.
- Secure and lock the entry door for travel.

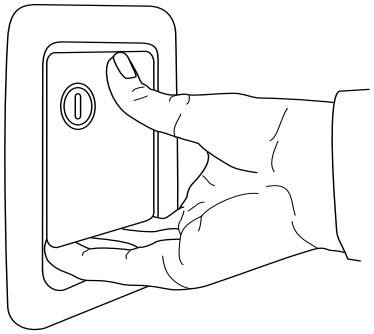


**Storing Cargo:**

Caution must be exercised when opening the bay doors as cargo may shift during travel. When closing bay doors, be sure to keep fingers away from the openings. When opening bay doors, use thumb at position shown while opening. Cargo may shift while driving. Push on bottom of door to relieve tension on lock.

**WARNING: To avoid injury, never place your hands or fingers near the top of the bay door when opening or closing. Always use the latch handle. Apply pressure with the other hand just above the latch handle.**

It is important to remember that regardless of how large the motorhome, there is a limit to storage capacity. Pack as lightly as possible to allow for additional storage during the trip. It is often easier to purchase needed items at the final destination rather than to discard items to make room for additional cargo.

While packing the motorhome, keep two things in mind, turning and braking. For the motorhome to handle well, the load will need to be evenly distributed side-to-side and front-to-back. Additionally, heavy items should be stored as low as possible to keep the motorhome from becoming top heavy. Make sure that everything is secure and safe from quick turns, bumps and sudden stops.

**TIP: Multi-purpose items, versatile clothing and periodic removal of unused cargo enables storage of more of what is usually used.**

**When loading the motorhome, please follow these guidelines:**

- Distribute the cargo weight evenly from side-to-side and front-to-back. This practice will prevent both handling problems and uneven stress on the components throughout the life of the motorhome.
- Heavy items should be stored near the rear axle, lighter items stored toward the front.
- To maintain a low center of gravity and reduce sway, store light items in the overhead cabinets and heavier items near the floor.
- Secure loose items to prevent weight shifts that could affect the balance of the motorhome.

## HITCH - *Using the Rear Receiver*

When using the rear hitch receiver, remember that the motorhome is intended for towing light loads and is primarily designed as a recreational vehicle. Safety and durability of the hitch receiver requires that the receiver be used properly. Avoid excessive towing loads or other misuse of the receiver. Towing will affect fuel economy. Weight pushing down on the rear hitch must not exceed 10% of the hitch capacity. It is recommended to weigh the motorhome when fully loaded to ensure proper weight distribution of the GCVW (Gross Combined Vehicle Weight). When weighing the motorhome add all passenger weight to GCVW total. The motorhome fully loaded, including fresh water and LP-Gas and any vehicle or trailer towed by it, must not exceed GCVW.

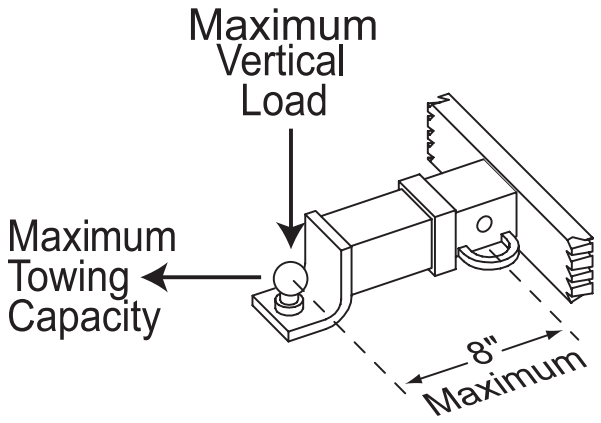


020065d

**WARNING: Most states and Canadian provinces require any trailer or vehicle being towed have adequate brakes. Failure to comply these State and Canadian province requirements may result in fines and/or pose a safety hazard, which may result in an accident.**

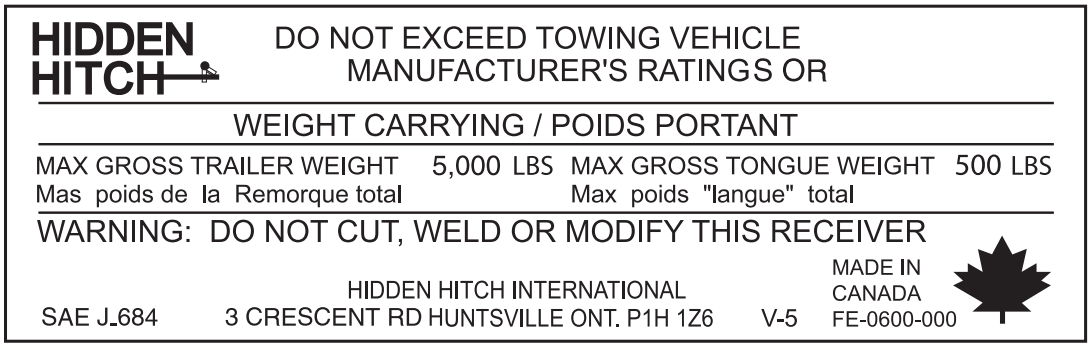


020128h

**WARNING: Do not tow a trailer or vehicle that exceeds the rated capacity of the hitch receiver. Overloading the hitch receiver can cause unusual handling characteristics and overstress the hitch receiver and chassis. It could also void the warranty. If there are any questions, call a factory technician.**

**Tow Car or Trailer:**

1. Connect a tow car or trailer to the motorhome with safety chains rated for the weight of the load.
2. Make the electrical connection and perform a light check before starting each trip and at each rest stop.
3. Check the tire frequently. Flat tires on a towed vehicle cannot be detected from the motorhome while driving. A flat tire is a safety hazard and may cause extensive damage.

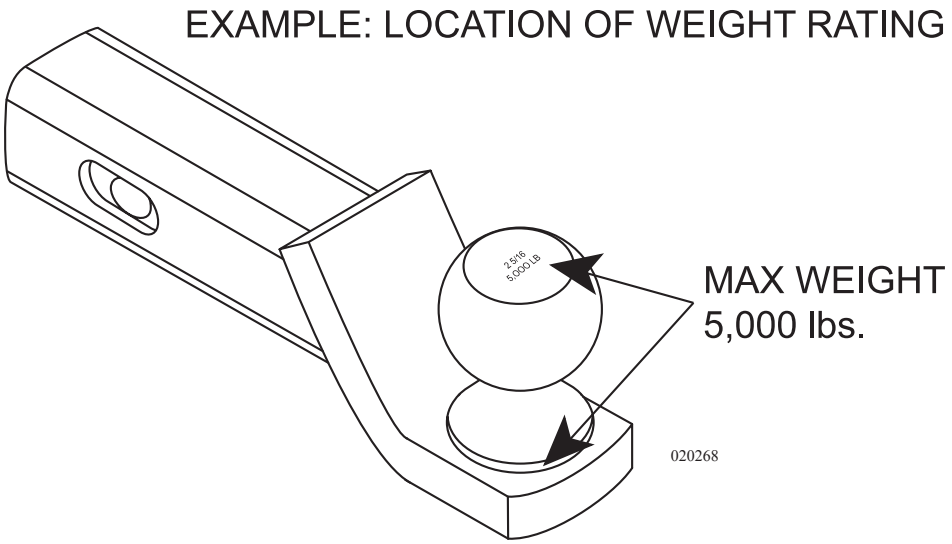


**WARNING: Be sure the weight ratings of the ball mount, tow ball and safety chains are equal to or greater than the load. The use of an extension to the receiver or extended ball mount will significantly reduce hitch receiver ratings. Modifications to the hitch receiver or use of the hitch receiver other than intended can void the warranty of the hitch receiver, chassis or both.**

## Tow Plug Connection

The motorhome is pre-wired with an electrical harness for towing. The harness is located on or near the hitch receiver. Convoluted tubing protects the tow harness wires until ready for use. Current draw should not exceed ten amps for each designated light circuit. Depending on the light configuration of the tow car, an electrical taillight converter may be required.

**NOTE: When towing a trailer or vehicle with a tow-wire system, a turn signal/brake light converter will be needed to adapt the tow plug wiring to the item being towed.**

**The Tow Harness Wires are Color Coded:**

1. Brown, 12 gauge - tailights
2. White, 12 gauge - ground.
3. Green, 14 gauge - right turn signal.
4. Yellow, 14 gauge - left turn signal.
5. Black with White stripe, 14 gauge - brake light.

When hooking up a tow plug connection you should strip the wires 3/8”. Twist the wire and place under clip and secure screw. Make sure there are no loose strands of wire which could short against the case or other terminals.

## REAR VIEW SYSTEM (OPTIONAL)

The motorhome can be equipped with a rear vision and voice system. The factory will provide the wiring behind the dash and at the rear cap for future installation. The rear vision system consists of a camera with a microphone and a monitor.

The rear view system is designed to provide the driver with a view of the rear of the motorhome. The field of view is 140° in the diagonal plane, 121° in the horizontal plane, and 90° in the vertical plane.

The driver can see what is behind the motorhome with the ability to listen to a guided assistant. This is useful during backing procedures. The rear vision system will automatically turn ON when the gear selector is placed in reverse. Turning the main power switch ON will allow continuous operation of the rear vision system when the ignition key is ON.

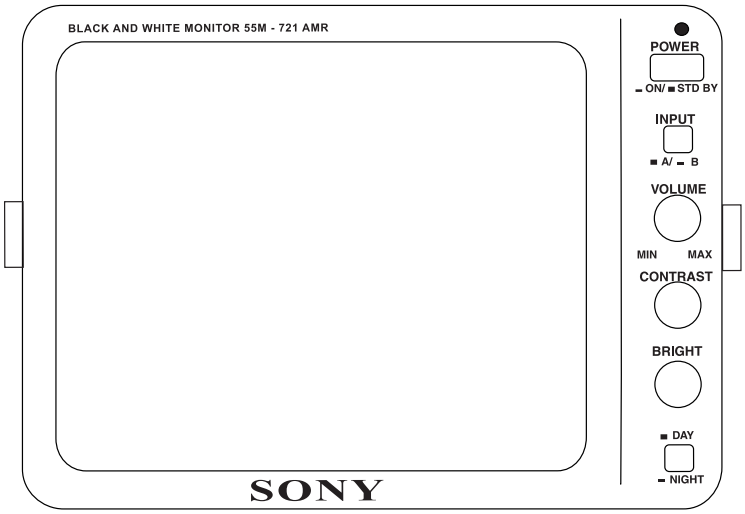


060103

**Power Switch:**

The switch, when ON (in) position, engages the monitor for viewing. The green LED indicator illuminates. When the switch is OFF (out), the monitor is in a standby mode of operation. The green LED remains illuminated when the ignition is on. The monitor displays rear viewing when the transmission is shifted to Reverse.

**Camera Selector:**

This switch should be left in the CA1 (out) position. CA2 (in) position is not used in the motorhome.

**Day/Night Switch:**

This switch should be left in the **DAY** (out) position for normal viewing. When set in **NIGHT** (in), picture brightness is reduced. **NIGHT** should be used for night viewing and driving through tunnels.

**Bright Control:**

Clockwise rotation increases the picture brightness. Counterclockwise rotation decreases the picture brightness.

**Contrast Control:**

Clockwise rotation increases the picture contrast. Counterclockwise rotation decreases the picture contrast.

**Audio Control:**

Clockwise rotation increases the volume level. Counterclockwise rotation decreases the volume level.

The camera angle may be adjusted to display a suitable rear view. The camera housing cover will need to be removed to gain access to the hexagon mounting bolts. The mounting bolts can be repositioned to the desired angle. Refasten the camera housing cover and seal using an appropriate sealant.

## BACKING UP A MOTORHOME

Whether you are a long time owner of recreational vehicles or just starting out, backing up can be a challenge. Following some simple helpful guidelines may help reduce the challenge. When backing up the driver (pilot) should be comfortable using the mirrors and the co-pilot's directions (ground guide) for assistance. Practice first, backing up with the co-pilot's guidance in a large unobstructed parking lot. It is a team effort.

The backing up process should begin while the motorhome is in forward motion. Maneuver the motorhome to align it with the chosen site. This allows straight alignment with the site. Aligning the motorhome with the site after the backing process begins will require considerably more room than an automobile and may require more than one attempt. When the motorhome is properly aligned with the site the parking area will be visible in both mirrors. Use straight lines, such as road markings, as reference points when possible.

If the destination does not have "pull-through" sites, try to pick a solid, level site. If possible pick a site located on the left side. This is the preferred side. The driver will have a better field of vision by using the driver side mirror. If the site is on the right side the driver will have to use the passenger side mirror for backing up, which leaves a blind spot. When a potential site is spotted stop the motorhome before the site. Get out and observe the area for soft ground, posts, large rocks, low hanging limbs or other obstacles. If the site meets the particular criteria, prepare to back in carefully. Have the co-pilot guide you using the five hand signals.

The co-pilot will perform just as important a job as the driver. When guiding the driver the co-pilot should be located safely at the left rear corner of the motorhome, facing forward, while remaining visible in the driver side mirror at all times. The co-pilot should make a conscious effort to maintain sight of the driver through the driver side mirror as the front of the motorhome maneuvers. If the driver loses sight of the co-pilot, stop the backing up process until the co-pilot returns to view. To avoid mishaps the co-pilot should be focused only on what the driver is doing, with brief observation moments. The driver should receive directions only from the co-pilot. If necessary, stop the backing up process to have co-pilot inspect other areas or angles of concern. Use of walkie-talkies will aid in guidance.

When co-pilot is guiding the driver, only five clearly defined signals should be used with only one signal given at a time. Flailing arms with indecisive signals only confuse the driver. Signals should be given with purpose and confidence. Directional signals are directing travel of the rear of the motorhome.

If desired direction is left, the co-pilot points left. For example: The co-pilot will use his/her right arm and forefinger pointing distinctly left with arm and finger held on a horizontal plane, indicating desired direction of travel of the rear of the motorhome. This type of directional signal is easily discerned in the mirror by the driver. The directional signal given will remain steady until desired movement is completed.

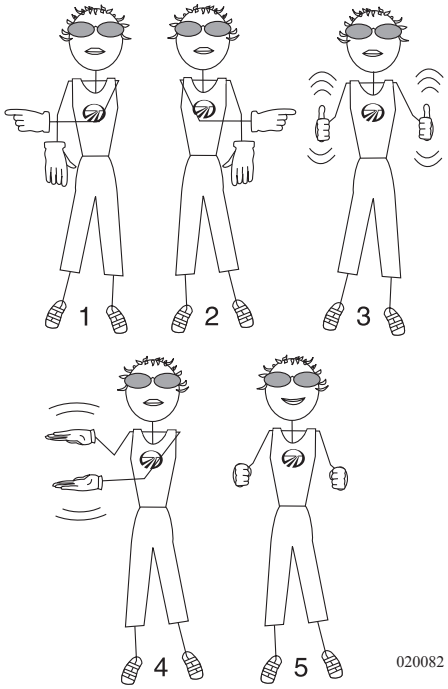


**The Five Directional Signals Are:**

1. Co-pilot uses left hand and arm held horizontal with forefinger pointing right to direct rear of motorhome to the right.
2. Co-pilot uses right hand and arm held horizontal with forefinger pointing left to direct rear of motorhome to the left.
3. Co-pilot uses both arms and hands parallel with thumbs pointing up and to rear in a waving vertical motion. This signals driver to maintain a straight back direction.
4. Co-pilot holds arms vertically, hands open with palms facing one another. Start with a wide separation, gradually closing distance of hands, in a rate appropriate to vehicle speed to indicate amount of distance to stop point.
5. Closed fists indicates STOP.

**Backing Up Trailers:**

Trailers have only one pivot point. Trailers may be backed up. Towed vehicles using a tow bar or tow dolly have more than one pivoting point which makes this type of equipment not suitable for backing. If using this type of towing equipment, plan ahead. Park safely along the road and walk a distance if necessary to avoid a possible back up situation. Avoid putting the motorhome and tow vehicle in a backing situation. To back up this combination completely disconnect the tow vehicle from motorhome. Trying to back up the motorhome with a tow vehicle connected will result in damage to the motorhome, tow vehicle and towing device.

The same rules for backing a motorhome may be applied when backing a trailer. When preparing to back a trailer into a space maneuver the motorhome sweeping wide, then turn back to the opposite direction. This will set the motorhome and trailer in a position to maneuver the trailer into space. When backing a trailer the driver may become disoriented with the direction of the steering wheel and the direction of the trailer. The bottom of the steering wheel must be moved in the desired direction of the trailer. For example: If the desired direction of the trailer is left, rotate the bottom of the steering wheel left. If the trailer moves in an undesired direction, use a short “pull-up” method, pulling forward just far enough to align the trailer with the space. The co-pilot should stand safely at the left rear corner of the trailer within view of the driver in the driver side mirror using the five hand signals for guiding.

**CAUTION: Tow bars or car dollies generally are made to travel in a forward direction only. Most towing equipment of this type is not designed for backing. Never attempt short back up distances with a tow bar or tow dolly. Damage to the motorhome, vehicle or towing device will result.**

## Brake - Parking

The motorhome parking brake is a foot pedal brake which operates in the same manner as an automobile parking brake. When at a complete stop, select **"P"** (Park) on the shift lever, then engage the foot pedal parking brake. The brake is released by the "brake release" handle, located below the lower left area of the dash.

## LEVELING SYSTEM (OPTIONAL)

A remote control panel located next to the driver seat operates the leveling system. The three point leveling system features a multiple warning system with Jacks Down light and a warning bell sounds when any jack is extended between 2 to 6 inches from fully retracted position. The leveling system pump is located in the rear curbside compartment. System protection fuses are located on the Leveling Control module.

**CAUTION: Prior to any leveling procedures it is important that all jacks be in contact with the ground. In doing so the frame is stabilized, reducing the ability of any one jack to induce excessive stress/twist to the frame as would extending one jack without the others supporting the frame. The hydraulic jack system is designed to reduce sight selection problems and stabilize the motorhome when parked. No single jack should be used solely to level the motorhome. Using an improper leveling process can result in applying excess torsion stress/twist to the chassis and body resulting in damage to the windshield or entry door malfunction. The leveling jacks are not designed for changing tires. This can cause problems with the suspension system, frame alignment and damage to the windshields. Never use the jacks to elevate any wheel position off the ground.**

**CAUTION: Before leveling the motorhome survey the area around and under the motorhome for obstructions that can damage the motorhome or undercarriage components when the air bags are deflated.**

**CAUTION: Hot asphalt, gravel or dirt may not support the weight that is placed on the hydraulic jack pads. Place thick plywood under the jack pads to help disperse the weight. If blocking up a rear jack pad to gain added clearance if the motorhome is on a slope, place a wheel chock at the opposite set of rear wheels to prevent the motorhome from rolling.**

**Leveling System Operation**

When operating the leveling system, it is important that all jacks are in contact with the ground so the frame is properly stabilized. Once all jacks are in contact with the ground, extend the front jack an additional ½ inch. This allows the front jack to act as a pivot point. Incrementally extend each jack in such a manner as not to apply excessive stress/twist to the frame.

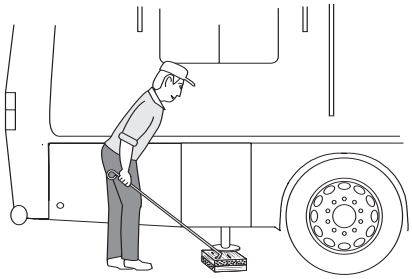

020185

The leveling system was designed to reduce site selection problems. If possible, park the motorhome with the front facing

downhill. If additional height or surface support is needed, construct 1' x 1' wooden blocks made from two pieces of ¾" inch plywood for a total thickness of 1 ½" inches. Drill a hole in one end, and use the awning hook to slide the block under the jack pad.

**CAUTION: Ensure the potential jack contact points are clear of obstructions or depressions before operation. Keep all people clear of the motorhome during the leveling system operations. Never expose hands or other parts of the body near hydraulic leaks. Hydraulic lines are under high pressure. Oil leaks may cut and penetrate the skin causing serious injury.**

**CAUTION: Damage to the mud flap may occur if it is located over a raised area when suspension is lowered. DO NOT move the motorhome while jacks are in contact with the ground or extended. Damage to the jacks may occur. DO NOT use jacks to raise wheels off the ground. Damage to the motorhome may occur.**

**Prior to Leveling**

- Park the motorhome on a reasonably level firm surface.
- Lower the air suspension by stepping on the brake several times until system air pressure is below 60 psi. With the ignition on, push and hold the Air Dump switch to lower the suspension. This reduces the amount the jack will need to extend before making contact with the surface.

**Leveling System Safety Features**

The leveling system has safety features to prevent a jack from extending during travel. The control panel will not activate until these safety features are in place.

- Turn the ignition switch to the Run position.
- Place the transmission in Neutral.
- Apply the parking brake.

**To Extend Jacks:**

- Turn on the jack control panel.
- To extend the front jack, push the Front Jacks button.
- To extend an individual rear jack, push the corresponding button. To extend both rear jacks simultaneously, push the Rear Jacks button.

**To Retract Jacks:**

- All jacks may be retracted by pressing the Retract All Jacks button. Turn off the control panel to stop retracting jacks.
- Turn OFF the control panel.
- Turn OFF the Ignition switch.

**If the jacks fail to extend or retract:**

- Apply the Park Brake, turn the Ignition to the Run position and place the transmission in neutral. Then try to operate the system.
- A fuse may be bad in the Leveling Control Module located in the console next to the pilot seat.

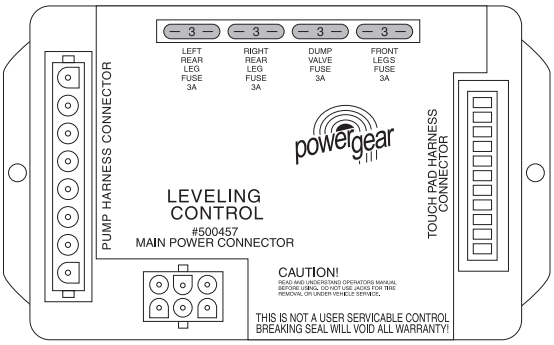

080422

**NOTE: If a jack was retracted before it made contact with the surface, it is possible in some instances the return spring tension may not be enough to retract the jack. Extend jack until it makes contact with surface. Continue to extend the jack an additional inch. Then retract the jack.**

**WARNING: Never rely solely upon warning lights or warning bell to determine the position of leveling jacks. Make a visual check to ensure all jacks are fully retracted prior to moving the motorhome.**

**Drive-away Protection:**

When the ignition switch is set to the RUN position with the jacks extended, should the transmission be taken out of neutral or the park brake released, the Jacks Down indicator will light and the warning bell will activate. The system will then automatically retract all jacks until jacks are fully retracted or the park brake is reset and the transmission is placed in Neutral.

**Maintenance:**

Occasionally, while the jacks are fully extended, use Dexron III to wipe and clean the jack rod. This will serve as a solvent as well as a lubricant. This will help prevent moisture damage to surface of the jack rod. Occasional oil or grease on the extended jack rod is normal and aids in the lubrication of the rod.

- Remove dirt and road debris from the jacks as needed.
- Check the fluid level every month. The fluid level should be within ¼” inch of fill port lip and checked when all the jacks retracted.
- If the jacks are down for extended periods, it is recommended to clean the jack rod then wipe with automatic transmission fluid for protection against moisture.
- Inspect and clean all hydraulic pump electrical connections every 12 months.
- Grease jacks every two years with two pumps of grease. **DO NOT** over grease to prevent damage to the rod seal.
- Change the fluid every 36 months.
- Useable Reservoir Capacity = 1.2 gal.
- Reservoir Capacity = 2.4 gal. (approx.)

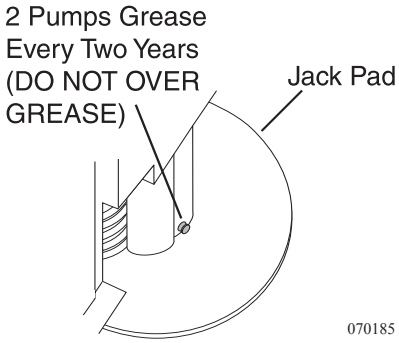

070185

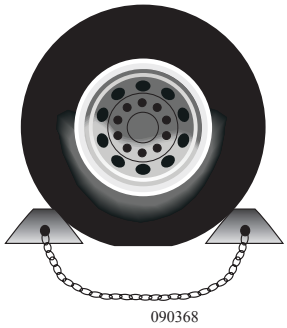


**Adding Fluid**

After changing the fluid or during operation the leveling system makes unusual noises during jack operation, it may indicate a low fluid level. Fluid changes or low fluid levels will introduce air into the leveling system. The system is designed to purge any air by raising and lowering each jack twice.

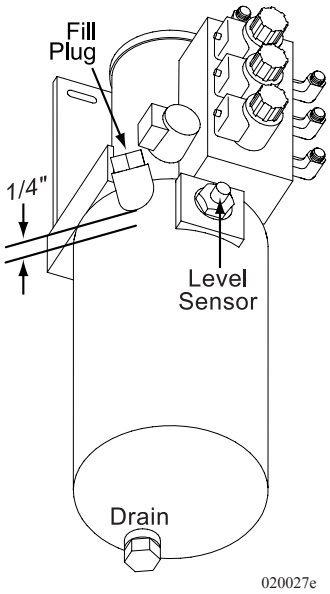


1. Chock a wheel fore and aft for safety.
2. Extend any jack six inches from the full retract position. All other jacks should be fully retracted.
3. With the leveling system on, have an assistant located in the pilot seat to listen when the warning bell stops sounding.
4. Unscrew the reservoir cap from the top of the pump. Slowly fill the reservoir with Dexron III automatic transmission fluid until the warning bell stops sounding.
5. Replace the reservoir cap. Retract the jack. The reservoir is now at the proper level.

## SET-UP PROCEDURES - CHECKLIST

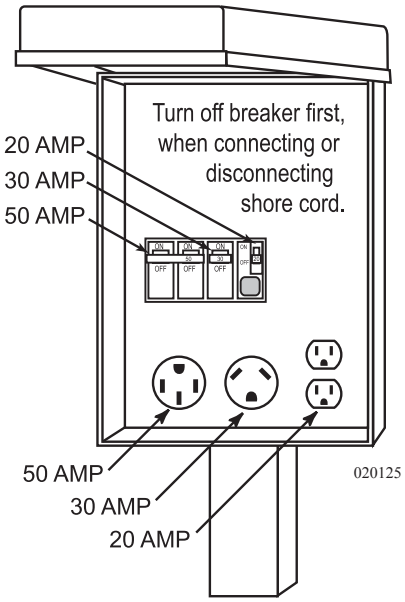


If the site for the motorhome has full hook-ups, use this quick reference hook-up checklist. This hook-up list is only a guide. This checklist has information on hooking up the utilities and preparing the appliances for use. Specific information on the slide room and awning operations is discussed in detail in other sections.

- If applicable, unlock any travel locks which may be securing the slide room. Check for lateral clearance before extending the slide-out room.

**NOTE: To operate any slide room: The ignition must be OFF and the park brake must be set.**

**CAUTION: Do not remove cover from shore power supply to troubleshoot electricity to the motorhome. Serious personal injury or death may occur. If there is no power to the motorhome inform the park manager. It is the park manager's responsibility to fix any problems with the park's shore hook up.**

- Open the LP-Gas tank primary valve.
- If possible, begin appliance operation on LP-Gas for the first 60 minutes. Switch the refrigerator operation to gas, start the water heater and furnace (if needed).
- Prepare the shore cord to be plugged in. Uncoil and inspect the cord. Perform any necessary cord maintenance. Install proper electrical adapters if anything other than 50 Amp service is provided. Turn shore power circuit breaker OFF prior to plugging in the shore cord. Operate electrical appliances in sequence when hooked to a limited shore power service.

**CAUTION: If shore power service is limited to 15 or 20 Amps, use of light duty extension cords and electrical adapters will create a voltage loss through the cord and at each electrical connection. Line voltage loss and the resistance at each electrical connection can be a hazardous combination. Damage to sensitive electronic equipment may result!**

- If cable service is provided, hook-up a 75 Ohm RG59 or RG6 cable to the cable connection in the service center. If the motorhome has a video selector box, press the appropriate viewing button for the item desired.
- A phone jack hook-up is provided in the service center. Phone outlets are placed throughout the motorhome, including a phone line to the satellite receiver.
- Hook the potable water hose to the city water connection in the service center. Install a water pressure regulator to protect the water hose from excess pressure. Turn the hand valve to “city water.”

**NOTE: Attach a water pressure regulator between the city water faucet and the potable fresh water hose to protect the hose from swelling or bursting under high city water pressure. Securing the pressure regulator to the hose with pliers will prevent the regulator from being misplaced.**

- Sewer drain pipe diameters are generally either three or four inches. Proper sewer hose adapters will ensure against leaks or spillage. With the sewer hose properly connected, open the grey water valve (small valve). The black water valve (large valve) remains closed until the tank is full or until time of departure.

**NOTE: When dumping the black tank, first close the grey water valve and fill the tank 50%. Open black tank valve until the drain cycle is complete. Use a non-potable water hose when using the black tank flush system. Close the black tank valve, then open the grey water valve. Solids will be flushed from the drain hose.**

## DRY CAMPING

For extended dry camping, management of all resources is essential. The motorhome has large batteries, plenty of water and large holding tank capacities. With a little care and forethought it is possible to go a long way with only the wonderful amenities you bring with you.

Conserve water! The motorhome holds a lot but it goes down the drain fast. Use a manual valve on the shower head. Turn the water off and on as needed while showering. By doing this the amount of water needed for a shower can be reduced by as much as two-thirds. Don't let water run in sink while doing other things, such as, wiping up the kitchen counters or brushing your teeth.

Conserve battery power. Use electricity sparingly. Charge the batteries when they are half down. At half charge the battery voltage will be 12.2 Volts. You can use a hydrometer for testing. A good rule of thumb is to run the generator for three to four hours daily, which should supply enough power. Before arriving at your destination, fill the motorhome with fuel to increase generator running time. Never try to use batteries until they are completely dead, or when the lights "dim out." Each time the batteries are used at half charge the ability to recharge up to full capacity is diminished. The damage that occurs is cumulative and will eventually render a battery useless.

If you are in a habit of starting the engine regularly, remember that the alternator output is lower at idle, and that even at fast idle it may take as much as an hour to replace what it took to start up the engine. Also, realize that running the engine for a short time may increase moisture contamination in the fuel and oil. It is better to run the engine less often and run it longer, for perhaps an hour. The good news is this can be included in the battery recharge schedule.

Remember that different motorhomes have different equipment and that everyone has different habits and expectations. The above general guidelines should provide a useful starting point for building your own schedule and regimen for extended stays where power and water are not available. You too can become less dependent on hook-ups.

**Setting Up for Dry Camping:**

- Switch refrigerator operation from Auto to LP-Gas.
- Operate the water heater on LP-Gas. Turn it on about an hour before hot water is needed.
- If the furnace is needed during the nighttime, set the thermostat temperature a bit lower to prevent the furnace from cycling all through the night.
- Check on small items that use battery power, such as the porch light, bay lights, the light under the step, generator compartment lights, engine compartment lights, etc. If the television is not being used, turn off the 12 Volt booster. Even one light accidentally left on, such as under the front cap, reduces battery reserves quickly.
- Some battery draw is unavoidable. The battery cut-off switch at the entry door must be on to operate many interior items such as lights or the furnace.
- Keep flashlights handy. Build a campfire when spending nighttime hours outdoors. Extinguish the flames before retiring for the evening. Many campgrounds place wood or cement barriers between the site space and fire pit. Illuminate any barriers or obstacles in the pathway to the motorhome.
- Place a large flashlight inside the front door for navigating through the coach during the night without having to use interior lights. If interior lighting is needed, use one light in a central location, such as the vanity.
- During the day it is still important to conserve on energy. Turn on the water pump only when using water. Turn the pump off when not in use. The water pump does not draw an abundance of power, however all battery amp hours are important and should be conserved.
- Run the generator during clean up and preparation for the day when the rest of the campers are up and about. Run it for a couple of hours to help charge the batteries. The generator may seem loud, however, the noise is minimal just a short distance away from the coach.
- Check the monitor panel frequently and keep track of water usage and battery consumption. Routinely check the LP-Gas level. Remember the furnace uses more gas in cold weather.
- Careful management of water is critical when dry camping. Know the motorhome tank capacities. Picture the amount of liquid in a gallon container. Visualize that amount each time you run the water. If you are dry camping for extended period, limit shower usage. Turn the water off when soaping down in the shower. If water conservation is critical, take a sponge bath. Conserve water while brushing your teeth. Chances are a campground without hookups will not have large comfortable shower rooms or bathroom, but it may only be equipped with primitive facilities. However, if it helps to economize on water, use them.

- Do not fill the sink full of water to wash a few dishes. Use disposable dishes whenever possible. Conserve propane by cooking dinner over the campfire. However, if cooking over the campfire is not desired, use the cook top. If possible, use the generator to operate the microwave. It is healthy for the generator to operate under a heavy load such as the microwave.
- Allow the generator to power up for a couple of minutes before applying a load.
- To conserve on battery power, plan what is needed from the refrigerator prior to opening it. If weather does not permit eating at the picnic table, or if no picnic table is available, eat at the dinette table by candlelight.
- Leave shoes outdoors or at the entry step to avoid tracking in dirt. Open windows during the day instead of using the roof air conditioner.
- Get back to nature and still enjoy the comforts of the motorhome. With a little imagination, the ways to conserve available resources while dry camping are endless.

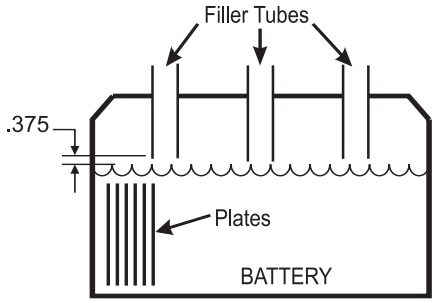


NOTE: The distilled water level in battery should be 3/8" below the filler tube.

**Typical Current Draw:**

- Turn all appliances on propane.
- One continuous duty soleniod is .7 Amp draw, two solenoids will be a 1.4 Amp draw.
- A 13" TV has a 1.7 Amp draw.
- Rope lights (10 ft) are a 1.3 Amp draw.
- The porch light is a 2.0 Amp draw.
- One fluorescent dual bulb light has a 2.1 Amps draw.
- One halogen ceiling light has a .09 Amp.

**Battery State of Charge vs Voltage/Specific Gravity**

| VOLTAGE | SPECIFIC GRAVITY | STATE OF CHARGE | DEPTH OF DISCHARGE |
|---|---|---|---|
| 12.66 | 1.265 | 100% | 0% |
| 12.45 | 1.225 | 75% | 25% |
| 12.25 | 1.190 | 50% | 50% |
| 12.05 | 1.145 | 25% | 75% |
| 11.90 | 1.100 | 0% | 100% |

*Battery Voltage: Fully charged with battery at rest for one hour.*

Battery Charge Voltage chart

## BREAKING CAMP

Listed below is a checklist guide to reference when preparing to break camp. Preparing the motorhome for travel will require several small tasks. Items properly secured and stowed will help prevent items from getting lost or being damaged during travel.

**Outside Checklist:**

- Disconnect the cable TV, lower the television antenna and (if applicable) the satellite dish.
- Retract the awnings and secure them for travel.
- Close LP-Gas tank valve. Check the level of the LP-Gas in the tank making sure there will be a sufficient amount.
- Drain and flush the holding tanks. First close the grey water valve, run enough cold water down the sink and shower drains until the grey tank is at least 50% full. Be careful not to overfill or flood the grey tank. Next, open the black tank valve and allow the drain cycle to complete. If applicable, connect a non-potable water hose to the Solid Waste Tank Flush hose connection and flush the black tank system. Close the black tank valve, then open the grey water valve. The water from the grey tank will help flush the solids from the drain hose.
- Disconnect the sewer hose. Flush hose with clean water from non-potable hose. Store the hose. Install the sewer cap.
- Fill the fresh water tank. Disconnect and store the fresh water hose. Remove any hose protected water pressure regulator from the city water faucet.
- Turn shore power breaker off and disconnect the shore line. Wind up and store the shore cord.
- Disconnect and stow the phone line.
- Check tire pressure.

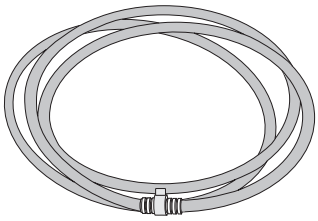

040400

*Screw the ends of the hose together before storage to prevent leakage and to prevent dust and insects from entering the hose.*

**Engine Checklist:**

- Inspect the engine, transmission and the engine compartment for fluid leaks.
- Inspect the area under the motorhome for fluid leaks or puddles.
- Check all fluid levels, oil, antifreeze, transmission and washer fluid.
- Inspect belts and hoses for wear.
- Inspect wiring for loose, frayed or corroded connections.
- Start engine and listen for any unusual noises.

**Interior Checklist:**

- If applicable, clear slide room path, clean floor and make sure bay doors are shut. When the slide room is fully retracted secure slide room awning locks for travel.

**NOTE: To operate the kitchen slide the ignition must be OFF, the park brake must be set and the bay doors under the slide room must be closed.**

- Secure and fasten any bi-fold and pocket doors. Lock the shower door.
- Close roof vents and windows.
- Secure any loose, heavy or sharp objects in case of a sudden stop.
- Close all cabinet doors and drawers.
- Turn OFF water heater, water pump and furnace.

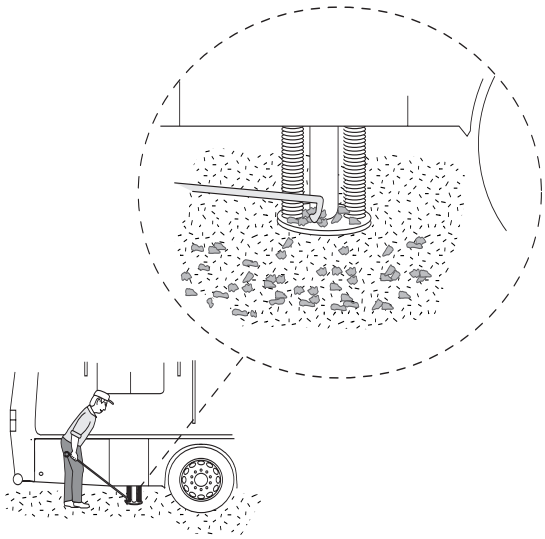

020185b

**Departure Checklist:**

- Check items in storage bays to make sure shifting or damage of items won't occur.
- Look around, above and under the motorhome for obstructions.
- Walk around the motorhome and camp area checking for forgotten items.
- Outside compartment doors should be closed and locked.
- Check operation of all exterior lights, headlamp, tail lamp, brake and clearance lights.
- Walk the interior and check for any items not secured.
- Turn interior lighting off.
- Check fuel level gauge. Check all other dash gauges for operation and correct level indications.
- Carefully pull forward out of campsite. If necessary, clean site and check for forgotten items.
- Secure and lock the entry door for travel.
- When using the hydraulic jacks ensure the jack pad is clear of debris when retracted. Loose rocks, gravel and debris can be thrown from the jack pad and can possibly damage the tow car.

## EMERGENCY PROCEDURES - ROADSIDE

Emergency stops may be required for any number of reasons. Proper braking techniques should be used during an emergency stop. An emergency road kit should include three reflective warning signs, road flares, a flashlight, spare automotive fuses, and an assortment of hand tools. For added safety an extra fire extinguisher should also be included. The motorhome is equipped with a fire extinguisher located inside next to the entrance door. Road flares or a reflective warning sign should be displayed if you are along the side of the road for any length of time. Pull off the roadway as far as possible for an emergency stop. Always turn ON the motorhome's hazard warning flasher when parked along the side of traffic lanes. Set the parking brake. In the event of an emergency stop, for a mechanical or motorhome related problems, contact **Monaco Coach Customer Service Support (1-877-466-6226)**.

Guidelines for the placing the warning triangles on the road. On a divided highway or one way road the placement is 10 feet, 100 feet and 200 feet from the rear of the motorhome. On a two lane road the placement should be 10 feet either front or rear of the motorhome and 100 feet in both directions of the motorhome. Curves and hills can be tricky as you may have to go up to 500 feet behind the motorhome to warn approaching traffic after placing one triangle 10 feet from the rear.

## Light Retractable

The retractable light is located in places of limited lighting for emergency purposes. Normally, one will be located in the engine service compartment.

**To Use:**

1. Activate light by moving ON/OFF switch to the **ON** position.
2. The light is on an 18' retractable reel cord. To operate, lift the lever and pull the light out.
3. The light has a magnetic base attached. Locate a place to attach the light so you can work hands free.
4. To replace bulb push down on clear plastic cover and twist.
5. To rewind, crank the handle in the retract direction. When it is fully retracted, push down on the lever handle to keep the light locked into place.

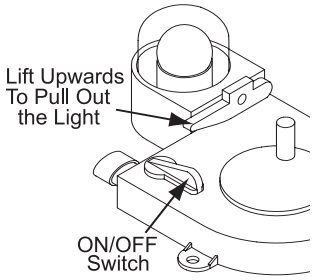


030990

## Transmission - Rocking Out

It may be possible to rock the motorhome out if you are stuck in snow, mud or deep sand. Shift the selector to D (Drive) and apply steady light throttle. Never apply full throttle as you may spin the wheels and bury the motorhome deeper. When the motorhome has moved forward as far it will go, apply and hold the service brakes. Allow the engine to return to idle before selecting the R (Reverse). Release the brake and apply light throttle until the motorhome has rocked as far it will go. Again apply the service brake and allow the engine to return to idle. Repeat this process if the motorhome has moved a greater distance. If the process does not free the motorhome call for towing assistance.

**NOTE: Sudden movements or lurching the motorhome with an open throttle can result in damage to the transmission. Avoid this condition by making shifts only when the throttle is closed and engine is at normal idle.**

## *Jump Starting*

**Alternative Starting Procedure:**

A weak or discharged battery will not supply the amount of CCA (Cold Cranking Amps) necessary to initiate and maintain cranking the engine while supplying the required voltage to start the engine. If the engine fails to crank, or cranks slowly due to a weak chassis battery, there are electrical back-up systems in place that will increase chassis battery voltage.

**Battery Boost Switch:**

The Battery Boost switch engages a heavy-duty solenoid to electrically connect the house batteries to the engine battery in the event the engine won't crank or cranks slowly. The solenoid is designed for short-term high current intermittent use. Engaging the boost solenoid for an extended period will damage the solenoid.

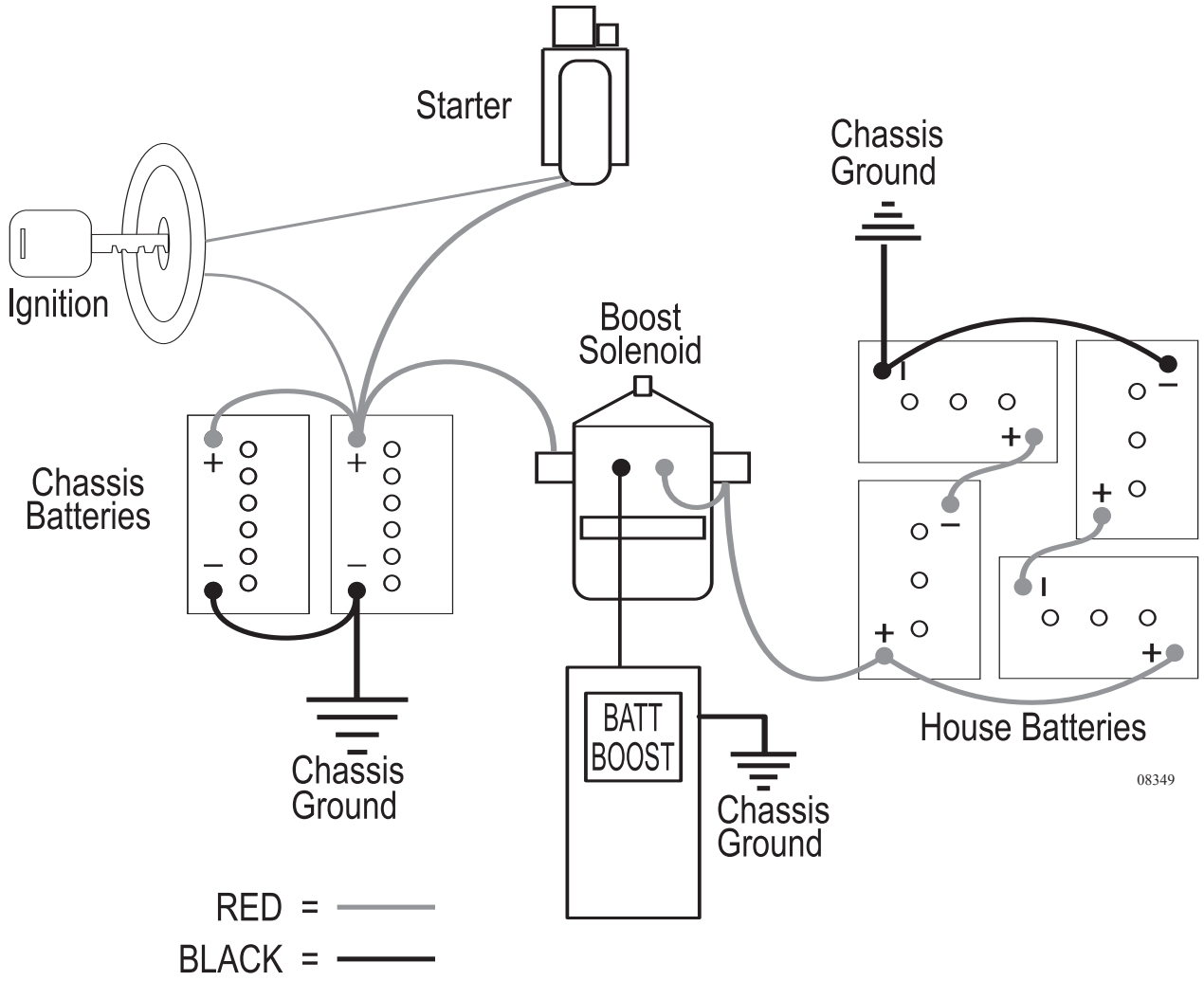

**To Use the Solenoid:**

- With the ignition key off, press and hold the Battery Boost switch for 10 seconds. After 10 seconds, continue to hold the switch down and turn on the ignition. Observe the battery volt gauge on the dash, it should read at least 12 Volts. If voltage is sufficient, try to start the engine.
- If the engine fails to crank, or does not crank fast enough, discontinue the attempt. Continued attempts will only diminish remaining surface charge in the chassis battery ending any future alternative attempts.
- Next, start the generator. This may require using the Battery Boost switch as the generator starts from the engine battery. When the generator is operating it will charge the house batteries.
- Allow the generator to run approximately ½ hour before attempting to start the engine.
- After ½ hour of generator operation, with the generator operating, hold down the Battery Boost switch for one minute. Release the switch for one minute, then engage the switch for one minute. Alternate this cycle 3 to 5 times. This will avoid overheating the Boost solenoid.
- Next, hold the switch down for one minute and turn the ignition on. The battery voltage gauge on the dash should indicate at least 12 Volts. If voltage is sufficient with the Boost switch held down, try to start the engine.
- If the engine fails to crank, or fails to crank quickly, the chassis battery may be depleted and the motorhome will require jump-starting or an external charger hooked to the chassis battery. When using jumper cables to start the engine, the cables must connect in a parallel configuration. That is positive (+) to positive (+) and negative battery (-) to negative chassis (-). Always connect the positive (+) before connecting the negative (-). To prevent arcing when disconnecting the cables, disconnect the negative (-) before disconnecting the positive (+).

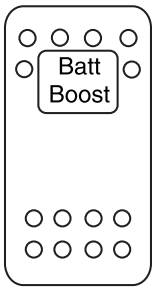

080366b

**WARNING: Batteries can emit explosive gases. Always ventilate the battery compartment prior to any work or service to the batteries. Extinguish all smoking material and keep all open flame and spark producing devices away from battery area.**

**CAUTION: A large amount of electrical current is required to jump-start an engine. The sizes of the battery, alternator and jumper cables supplying the "jump" are current limiting factors. Voltage fluctuations that occur during a jump-start procedure can damage sensitive electronic equipment and charging systems. Wait a sufficient amount of time for a surface charge to build before attempting to crank an engine when using a jump-start procedure. If uncertain about performing a jump-start procedure, contact a professional. Damage and personal injury can occur if this procedure is not performed correctly.**

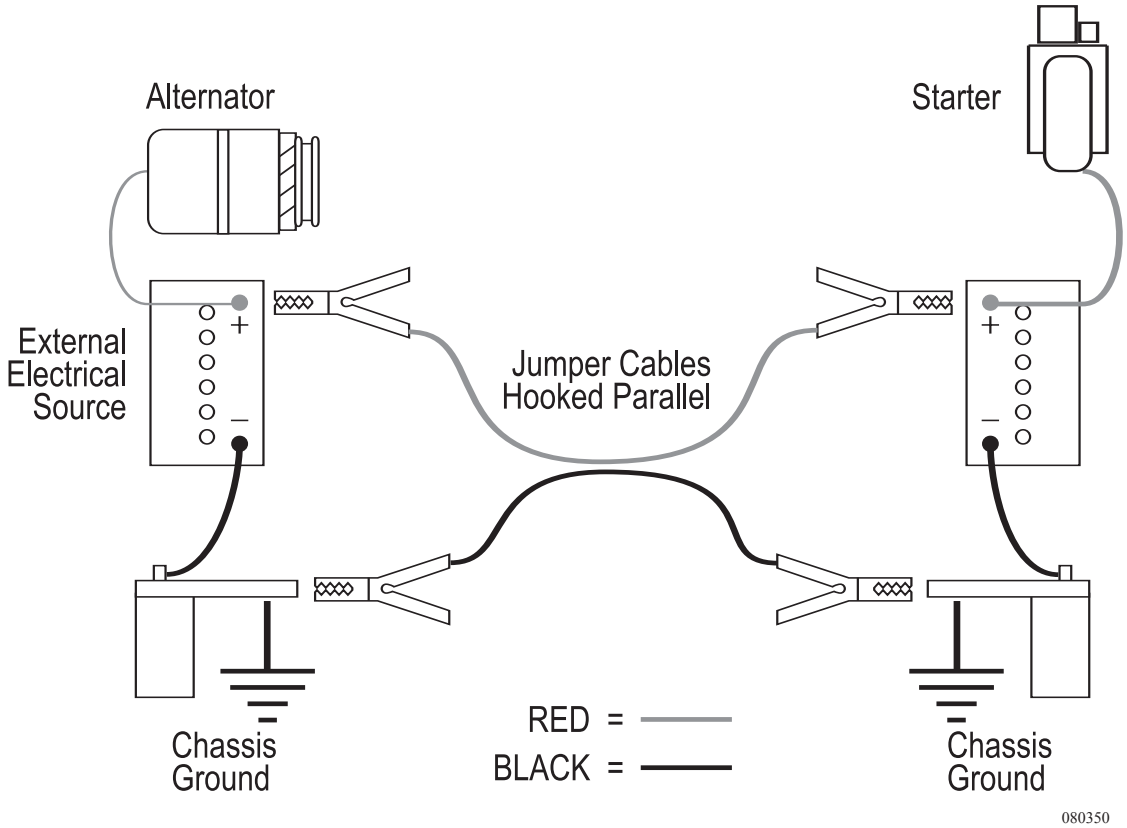


**Jump Starting:**

- When using an external electrical source to connect to the chassis battery, turn the main battery disconnect switches **OFF** prior to hooking up the jumper cables.
- Hook up the cables then wait several minutes to allow a surface charge to build in the chassis battery before attempting to start the engine.
- Turn **ON** the battery disconnect switches and attempt to start the engine. **DO NOT crank the engine more than a few seconds.**
- After the engine has started disconnect the cables. Disconnect the negative (-) cables before disconnecting the positive (+) cables to prevent arcing.
- If the engine does not crank, or cranks slowly, **DO NOT CONTINUE**. Obtain assistance from a qualified technician. Extensive damage, fire or injury can occur.

**WARNING: The gases around the battery can explode if exposed to flames, sparks or lit cigarettes. An explosion can result in injury or vehicle damage. Batteries contain sulfuric acid, which burns skin, eyes and clothing. Do not connect the end of the second cable to the negative (-) terminal of the battery to be jumped. A spark may cause an explosion of the gases that surround the battery. Connect only to the chassis, away from the battery.**

## TOWING PROCEDURES

If calling a towing company for service, it is recommended to use a lowboy/landall type of trailer. If a tow truck is used it needs to have a support arm that goes under the motorhome and secures to the front axle. Inform the tow company of the axle weights and total weight of the motorhome. Other important information is the length of the motorhome, number of passengers and milepost location. Two tow trucks may be necessary : One to tow the motorhome and the other to tow a trailer or the tow vehicle if it is not operational.

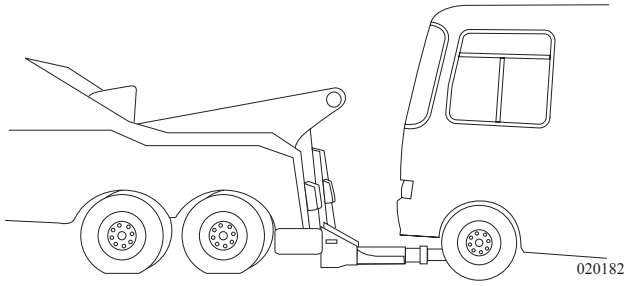


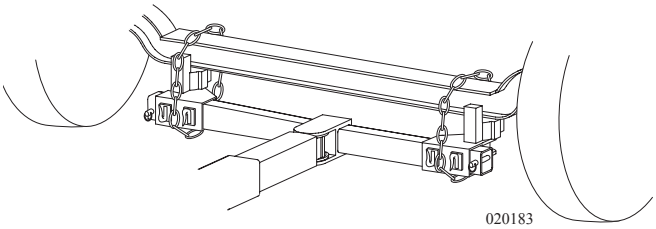


If the motorhome needs to be towed, use the following instructions:

- Secure any loose or protruding parts if the motorhome is damaged.
- **Inspect** the points of attachment on a disabled motorhome. If attachment points are damaged, select other attachment points at a substantial frame structural member.
- Never allow anyone to go under a motorhome while it is being lifted by towing equipment unless the disabled motorhome is adequately supported by safety stands.
- Do not tow the motorhome from the rear. Towing from the rear will severely overload the front tires and suspension, possibly resulting in tire and/or front suspension failure. Rear frame extensions are not designed to support weight loads imposed by lifting the motorhome from the rear.
- If the rear wheels are disabled, place the motorhome on a flat bed trailer or use a heavy duty dolly under the rear wheels and tow the motorhome from the front.
- The drive shaft must be removed to prevent damage to the transmission. Secure the end caps to prevent losing or contaminating the needle bearings.

**WARNING: In case the motorhome requires towing, ensure all precautions are followed. The drive shaft must be disconnected. The manufacturer WILL NOT cover damage to the motorhome caused by a towing company.**

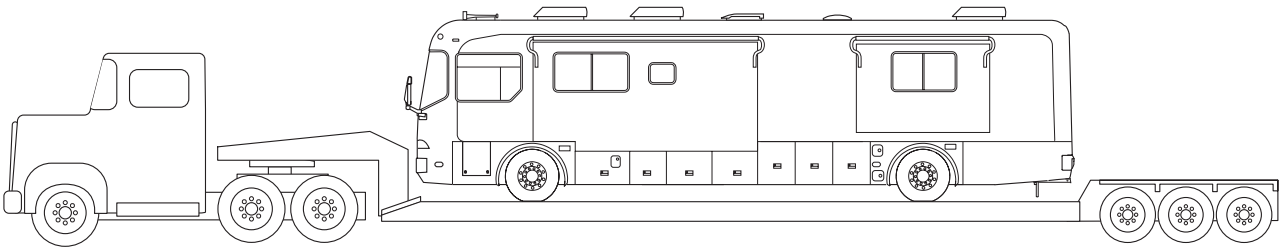

## TIRES

A tire designed for a motorhome is a very technical and precisely engineered product. To obtain maximum wear and the best service out of the tires, it is helpful to understand their function. A tire is a "container" that holds air. A combination of air and the tire casing support the motorhome and its contents.

The following information concerning tires, weighing the motorhome and subsequent tire information are set in the order in which the process is performed or experienced. The motorhome must be weighed fully loaded before the proper tire inflation pressure can be obtained. Since the tire is the only contact the motorhome has with the road surface, it is critical that proper tire pressure be maintained so that it will properly support the weight of the motorhome. Improper tire pressure will lead to abnormal wear or sudden tire failure.

The tire performs other functions, such as traction for moving, stopping, steering and providing a cushion for the motorhome.

Modern tire technology blends a unique mix of chemistry, physics and engineering to provide a high degree of comfort, performance, efficiency, reliability and safety. To obtain the maximum wear and best service of the tires it is helpful to understand the components and function of the tires.

**Tire Components:**
**Tread:** Provides traction and cornering grip.
**Belts:** Stabilize and strengthen the tread.
**Sidewall:** Protects the side of the tire from road and curb damage.
**Body Ply:** Gives the tire strength and flexibility.
**Bead:** Assures an air-tight fit with the wheel.
**Inner liner:** Keeps air inside the tire.

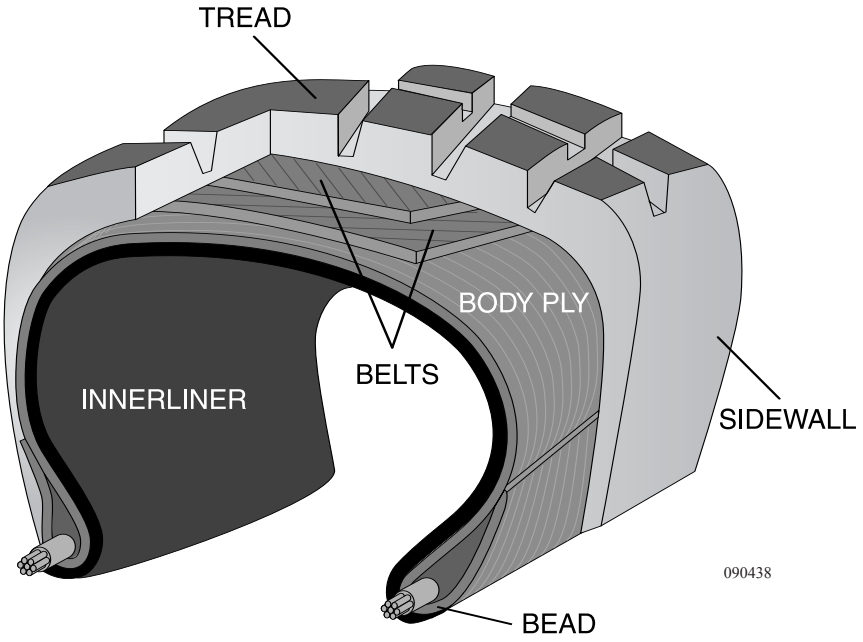

## Importance of Air Pressure

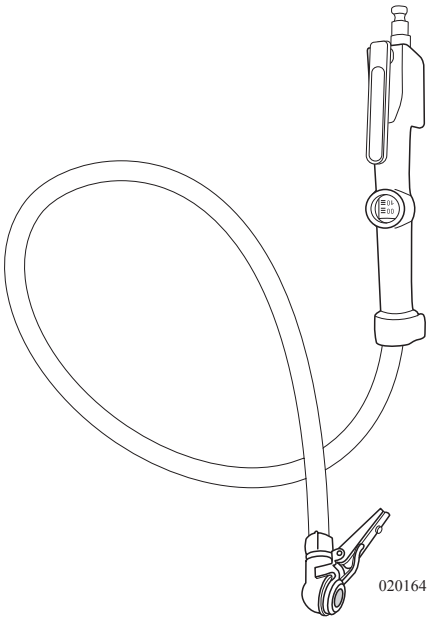


The most important factor in maximizing the life of the tires is maintaining proper inflation. Driving on any tire that does not have the correct inflation pressure for the load of the motorhome is dangerous and may cause premature wear, tire damage and/or loss of control of the motorhome.

An under-inflated tire will build up excessive heat that may go beyond the design limits of the rubber and radial cords, which could result in sudden failure. An under-inflated tire will also cause poor motorhome handling, rapid and/or irregular tire wear and an increase in rolling resistance that results in a decreased fuel economy.

An over-inflated tire will reduce the tire's footprint/contact patch with the road, thus reducing traction, braking capacity and handling of the motorhome. Over-inflation of a tire for the load will result in a harsh ride, uneven tire wear and is susceptible to impact damage.

Maintaining correct tire inflation pressure for each loaded wheel position on the motorhome is of the utmost importance and must be a part of regular motorhome maintenance.

**WARNING: Driving on a tire that is under-inflated can exceed the design limits of the tire and may damage the sidewall. A damaged sidewall can burst upon inflation resulting in serious damage, injury or death. Aged tires are also susceptible to sidewall damage. For safety purposes clear the area of people and pets during tire inflation. Inflate the tires using a remote inflation device.**

## Tire Pressure Inflation Guideline

Federal law requires that the specifications for the tire's maximum load rating be molded into the sidewall of the tire. The amount of air pressure to use is dependent on the weight of the motorhome when it is fully loaded. The chart within this section indicates the weights that can be properly supported by varying air pressures. Decreasing air pressure decreases load carrying capacity.

Always comply with the tire manufacturer's recommended pressure inflation guideline. The actual weight of the motorhome can vary significantly depending on how it is loaded. For optimum tire wear, ride and handling always comply with the manufacturer guideline. A tire inflation chart listing proper inflation pressure for different loads is contained in this section of the manual.

The tires of the motorhome are inflated to pressure(s) appropriate for the actual weight on each axle in the unloaded, shipped condition. When the motorhome is loaded, check and adjust the inflation pressure on each tire as needed.

Always inflate tires to the pressure indicated in the tire chart for the load carried by the tire. **DO NOT OVERINFLATE OR UNDERINFLATE THE TIRES**.

The Gross Axle Weight Rating (GAWR) of the axles listed on the federal certification label attached to the motorhome is the maximum allowable loaded weight on an axle.

When the actual loaded weight of the motorhome and the weight on each axle is unknown, follow the recommended tire inflation pressure(s) listed on the federal certification label. When loading a motorhome never exceed the motorhome's Gross Vehicle Weight Rating (GVWR) or the GAWR for each axle.

Contact the tire manufacturer for further information concerning proper tire pressure inflation and other tire issues.

# Tire Chart - Goodyear

| TIRE SIZE | MAX Speed Rating (MPH) | Dual (D) Single (S) | 65 | 70 | 75 | 80 | 85 | 90 | 95 | 100 | 105 | 110 | 115 | 120 | 125 |
|---|---|---|---|---|---|---|---|---|---|---|---|---|---|---|---|
| 8R19.5 | 75 | D | 2350 | 2460 | 2570 | 2680 | 2780 | 2880 | 2980 | 3070 | 3160 | **3375(F)** | | | |
| | | S | 2410 | 2540 | 2680 | 2800 | 2930 | 3060 | 3170 | 3280 | 3400 | **3500(F)** | | | |
| 225/70R19.5 **Ford** | 75 | D | | 2720 | 2860 | 3000 | 3115 | 3245 | **3415(F)** | | | | | | |
| | | S | | 2895 | 3040 | 3195 | 3315 | 3450 | **3640(F)** | | | | | | |
| 245/70R19.5 | 75 | D | | 3415 | 3515 | 3655 | **3875(F)** | 3940 | 4075 | **4375(G)** | | | | | |
| | | S | | 3640 | 3740 | 3890 | **4080(F)** | 4190 | 4335 | **4545(G)** | | | | | |
| 265/70R19.5 | 75 | D | | | | 3750 | 3930 | 4095 | 4300 | 4405 | 4560 | 4805 | 4860 | **5070(G)** | |
| | | S | | | | 3970 | 4180 | 4355 | 4540 | 4685 | 4850 | 5070 | 5170 | **5355(G)** | |
| 9R22.5 | 65 | D | 3120 | 3270 | 3410 | 3550 | 3690 | 3820 | **3950(F)** | | | | | | |
| | | S | 3190 | 3370 | 3560 | 3730 | 3890 | 4050 | 4210 | 4350 | **4500(F)** | | | | |
| 10R22.5 | 65 | D | 3690 | 3870 | 4040 | 4200 | 4375 | 4520 | 4670 | **4875(F)** | 4970 | 5110 | **5250(G)** | | |
| | | S | 3770 | 4000 | 4210 | 4410 | 4610 | 4790 | 4970 | **5150(F)** | 5320 | 5490 | **5680(G)** | | |
| 11R22.5 | 75 | D | | | | 4760 | 4950 | 5120 | 5300 | 5470 | **5750(G)** | **5800(H)** | | | |
| | | S | | | | 4990 | 5220 | 5430 | 5640 | 5840 | **6175(G)** | 6240 | 6430 | **6610(H)** | |
| 12R22.5 | 65 | D | | | | 5190 | 5390 | 5590 | 5780 | 5960 | 6150 | 6320 | 6500 | **6750(H)** | |
| | | S | | | | 5450 | 5690 | 5920 | 6140 | 6370 | 6590 | 6790 | 7010 | **7390(H)** | |
| 235/80R22.5 **Workhorse** | 75 | D | | | 3395 | 3594 | 3814 | 4035 | 4278 | 4410 | | | | | |
| | | S | | | 3593 | 3815 | 4035 | 4278 | 4543 | 4675 | | | | | |
| 245/75R22.5 | 75 | | | 3260 | 3425 | 3640 | 3740 | 3890 | 4080 | 4190 | 4335 | **4410(G)** | | | |
| | | S | | 3470 | 3645 | 3860 | 3980 | 4140 | 4300 | 4455 | 4610 | **4675(G)** | | | |
| 255/70R22.5 | 75 | D | | 3585 | 3765 | 3970 | 4110 | 4275 | 4410 | 4455 | 4610 | 4675 | **5070(H)** | | |
| | | S | | 3815 | 4005 | 4190 | 4370 | 4550 | 4675 | 4895 | 5065 | 5205 | **5510(H)** | | |
| 265/75R22.5 | 75 | D | | | 4040 | 4205 | 4370 | 4525 | 4685 | **4805(G)** | | | | | |
| | | S | | | 4070 | 4255 | 4440 | 4620 | 4800 | 4975 | 5150 | **5205(G)** | | | |
| 275/70R22.5 | 75 | D | | | | | 4535 | 4750 | 4960 | 5165 | 5370 | 5575 | 5775 | 5975 | **6175(H)** |
| | | S | | | | | 4885 | 5080 | 5305 | 5530 | 5750 | 5965 | 6185 | 6400 | **6610(H)** |
| 275/80R22.5 | 75 | D | | | | | 4855 | 5080 | 5305 | 5525 | 5745 | 5965 | 6180 | **6395(H)** | |
| | | S | | | | | 5265 | 5515 | 5755 | 6000 | 6235 | 6475 | 6710 | **6940(H)** | |
| 295/75R22.5 | 75 | D | | | 4690 | 4885 | 5070 | 5260 | 5440 | **5675(G)** | 5800 | **6005(H)** | | | |
| | | S | | | 4725 | 4945 | 5155 | 5370 | 5510 | 5780 | 5980 | **6175(G)** | 6370 | **6610(H)** | |
| 295/80R22.5 | 75 | D | | | | 4855 | 5100 | 5335 | 5570 | 5805 | 6035 | 6265 | 6490 | 6720 | **6940(H)** |
| | | S | | | | 5480 | 5750 | 6020 | 6285 | 6550 | 6810 | 7070 | 7320 | 7580 | **7830(H)** |
| 315/80R22.5 | 75 | D | | | | | 5840 | 6070 | 6395 | 6540 | 6770 | 6940 | 7210 | **7610(J)** | 7390 |
| | | S | | | | | 6415 | 6670 | 6940 | 7190 | 7440 | 7610 | 7920 | **8270(J)** | 8820 |
| 285/75R24.5 | 75 | D | | | 4740 | 4930 | 5205 | 5310 | 5495 | **5675(G)** | | | | | |
| | | S | | | 4770 | 4990 | 5210 | 5420 | 5675 | 5835 | 6040 | **6175(G)** | | | |

*The motorhome manufacturer is not the author of this chart and makes no representation or warranty concerning the accuracy of the information disclosed by the chart. The motorhome is not responsible for the accuracy of the information disclosed or for any errors within the Tire Inflation Chart.*

Tire Chart update 0601b

## Inspecting & Pressure

Regularly check tire pressure. A nail or screw can lodge in the tire and create a slow leak. The object may eventually be spotted on a front tire or an outside rear dual. However, if there is a slow leak on an inside dual, it will probably go unnoticed. If you begin driving unaware that an inside dual tire is low on air pressure or is flat, very quickly (in most cases a few miles) the outside rear tire will heat up due to carrying double the load. This can lead to failure of the outside tire resulting in two flat tires on the same side of the same axle.

Check the tire pressure every two weeks or at least once a month and before any major trip. Check the tire pressure every "drive" morning on both long and short trips (driving a day or less). Check the tire pressure before leaving on a trip and again before starting your trip home. Check the tire pressure before storing the motorhome for any length of time. More importantly, check the tire pressure when removing the motorhome from storage.

Check the tire pressure when the tires are "cold" and have not been driven for more than one mile. The rated load capacity for cold inflation pressure is based on ambient temperature. If you must check the tires when they are warm or hot, allow for a slight increase in air pressure. The pressure should be within a couple of pounds of each other on the same axle. Never let air out of a hot tire.

When checking the inflation pressure, use a high-quality truck tire air gauge. These have an angle dual head. This type of pressure gauge can check the pressure of the inner dual wheel that has the valve stem pointing outward and the outer wheel has the valve stem pointing inward. Nothing should restrict the ability to easily check tire air pressure daily when traveling in the motorhome. Use valve stem caps with a positive seal to prevent air escaping from the valve stem. If there are extension hoses on the valve stem, make sure they are good quality reinforced stainless steel braid. Attach hoses securely to the outer wheel.

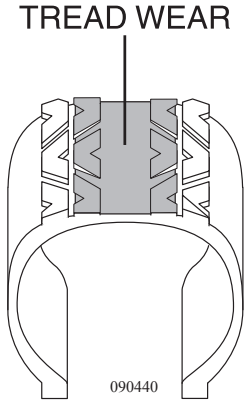

*Example of Overinflation. More wear in Center*

Optimum tire performance is achieved at proper inflation pressure for the load carried. Do not mix tires of different tread patterns on the same axle. The difference in traction could cause rear end gear fight and mechanical damage to the drive train. Never mix tires of a different size or construction on the same axle.

**Higher than recommended pressure can cause:**

- Hard ride.
- Tire bruising or carcass damage.
- Rapid tread wear in the center of the tire.

**WARNING: Improperly inflated tires can effect handling or cause sudden tire failure possibly resulting in loss of vehicle control. Always use an accurate tire pressure gauge when checking tire pressure.**

**Lower than recommended pressure can cause:**

- Tire Squeal on Turns.
- Rapid and Uneven Wear on the Edges of the Tread.
- Tire Container Bruise or Rupture.
- Tire Cord Breakage.
- Excessive Tire Temperature.
- Reduced Handling Quality.
- Separations.
- Circumferential Breaks.
- Higher Risk of Road Hazard.
- Loss of Casing Durability.
- High Fuel Consumption.

**Unequal tire pressures on same axle can cause:**

- Uneven Braking, Swerve Upon Acceleration.
- Steering Lead, Torque Steer.
- Reduced Handling Quality.

**WARNING: Driving on a tire with low air pressure can exceed the design limits of the tire. Damage to the sidewall of the tire can occur. A damaged sidewall can burst upon inflation causing serious damage, injury or death. Aged tires are also susceptible to sidewall damage. For safety purposes, clear the area of people and pets during tire inflation. Inflate tires using a remote inflation device.**

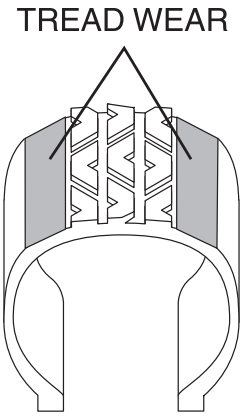


*Example of Underinflation More wear on edges.*

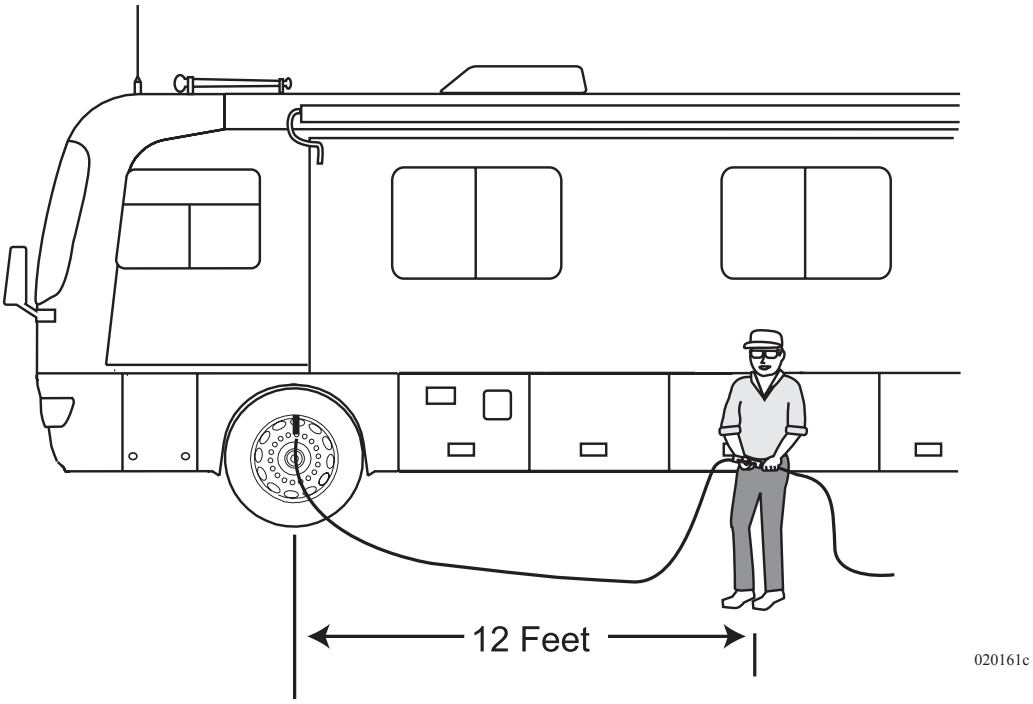

## Air Pressure Checklist

1. When checking air pressure, make sure the tires are cool - meaning they are not hot from driving, even a mile.

**NOTE: If the motorhome must be driven a distance to get air, check and record tire pressure first. Add appropriate air pressure when reaching the pump. It is normal for tires to heat up and the air pressure inside to go up as driven. Never "bleed" or reduce air pressure when tires are hot.**

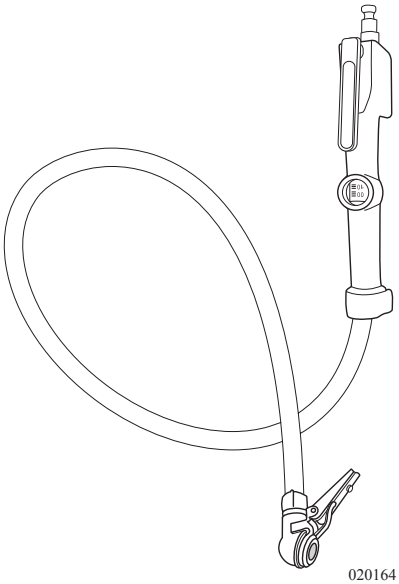


2. Remove the cap from the valve on one tire.
3. Firmly press a tire gauge onto the valve and record reading.
4. Add air to achieve recommended air pressure.
5. If the tire is over filled, release air by pushing on the metal stem in the center of the valve. Recheck the pressure with the tire gauge.
6. Replace the valve cap.
7. Repeat with each tire.
8. Visually inspect the tires to ensure there are no nails, or other objects, embedded that could poke a hole in the tire and cause an air leak.
9. Check the sidewalls to make sure there are no gouges, cuts, bulges, or other irregularities.

**NOTE: Air pressure in a tire goes up (in warm weather) or down (in cold weather) 1-2 pounds for every 10 degrees of temperature change.**

Extreme caution must be taken to ensure that the tires are fully supported when placing blocks under the tires. The load on the tire should be evenly distributed on the support block. In the case of dual tires, distribute the load evenly on blocks for both tires. If not properly supported, the steel cables in the sidewall of the tires may be damaged and could lead to premature fatigue of the sidewall.

**CAUTION: Supporting the tires prevents damage to the sidewall of the tires and does not prevent tire roll.**

## Tire "Support" Methods

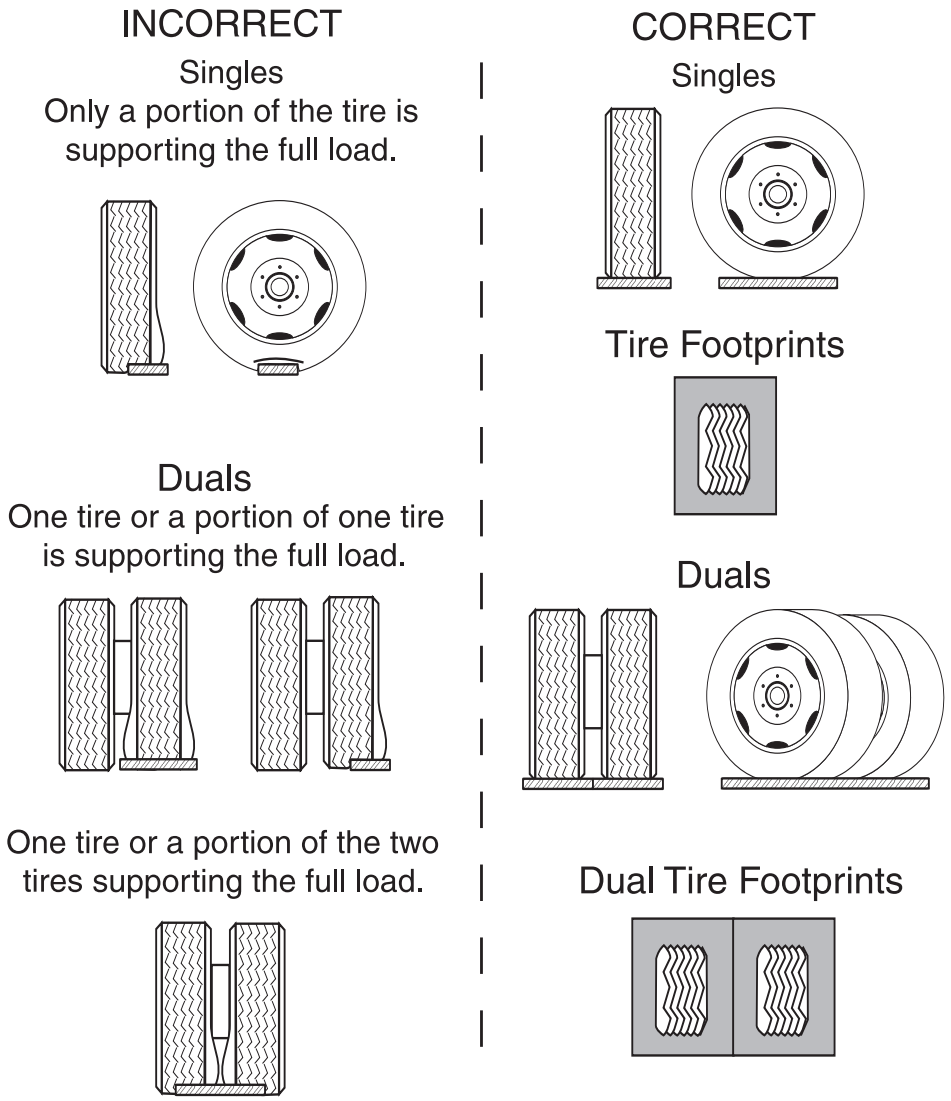


020063b modified

## Tire Vibration

Sudden tire failure or blowout is often preceded by tire vibration. Some other symptoms that can cause tire failure are a bulge in the sidewall or swelling in the tire carcass. Striking an object or large hole in the road surface can damage a tire. Inspect the tires immediately after such an occurrence. Continue to inspect the tires periodically thereafter in case minor damage occurred. Rotation forces can continue to stress damaged areas that can manifest later in a sudden tire failure. If an unusual vibration begins, or a bulge is noticed in a sidewall, have the tires evaluated by a qualified professional as soon as possible.

## Tire Rotation

Tire rotation can increase the useful life of the tires by achieving uniform wear on all of the tires. The first tire rotation is the most important in determining which rotation pattern to use. Have the tire manufacturer determine the tire rotation pattern. Any unusual or unique wear patterns, or indications of uneven wear that may have developed, should be evaluated for possible tire rotation. Misalignment, imbalance or other mechanical problems may exist and will need corrected prior to rotation.

After a tire rotation, check and adjust the inflation pressures for the actual loads of the wheel position accordingly.

Tires are warranted by the tire manufacturer. The motorhome manufacturer is not responsible for warranty coverage or tire wear.

## Tread

Tires must be replaced when the tread is worn down to 4/32 of an inch on the front and 2/32 of an inch on the rear in order to prevent skidding and hydroplaning. If there are questions regarding tread wear consult a tire dealer as soon as possible.

Built in tread wear indicators, or “wear bars,” which look like narrow strips of smooth rubber across the tread will appear on the tire when the tread is worn down to one-sixteenth of an inch. When these “wear bars” are noticed, the tire is worn out and should be replaced.

Visually check the tires for signs of uneven wear. The tire may have irregular tread wear if there are high and low areas or unusually smooth areas. Consult the tire manufacturer as soon as possible.

**WARNING: In many instances the life of the tires on the motorhome is not determined by mileage but by age. Tires are subject to weathering. Weathering cracks run in circumference with the tire. Though the sidewall of the tire may look fine and be structurally sound, weathering can occur inside the well of the tread, therefore replacement may be determined not by mileage but age. Have the tire manufacturer inspect the tires for age weathering.**

## Tire Care

Road oil will cause deterioration of the rubber. Dirt buildup will help hold chemicals in the air next to the tire and will also cause deterioration.

When cleaning any rubber product, proper care and methods in cleaning must be used to obtain the maximum service years out of the tires. Use a soft brush and a mild detergent to clean the tires. If a dressing product is used to "protect" the tires from aging, use extra care and caution. Tire dressings that contain petroleum products or alcohol may cause deterioration or cracking.

In many cases it is not the dressing that causes a problem, but the chemical reaction that subsequently occurs. When these same dressing products are used on a passenger car tire that is replaced every three to four years, it is rare to see a major problem. However, in most cases, motorhome tires may last longer due to limited annual mileage, and exposure.

## In Case of Flat Tire

In the event of a flat tire, it is recommended to call for roadside assistance. The size and weight of the motorhome and its tires require the proper equipment to change the tire. A professional service technician will have the equipment and training needed to repair or replace the tire. In the case of sudden tire failure, avoid heavy braking. Hold the steering wheel firmly and gradually decrease speed. Slowly move to a safe off-road place, which should be a firm level spot. Turn the ignition off and turn the hazard flasher system ON. Save the old tire for any warranty coverage.

**INFO: *Goodyear* emergency service number is 877-484-7376.**

**Hub Piloted Mounting:**

- Before using flange nuts that have already been used in service, apply two drops of oil at one point between the flange and hex. This will allow parts to rotate freely and provide the proper clamping force when tightened. Use any common lubricant typically used for fasteners. Examples are motor oil and general purpose lubricating oils. Excessive lubricant is not desirable, this will not improve the nut torquing performance. Excessive lubricant makes the nuts hard to handle, attracts dirt to the nuts and may cause unsightly appearance to the wheel. Only used nuts need to be lubricated.

- Since flange nuts generate higher clamping force always use grade eight studs with hub mount wheels.

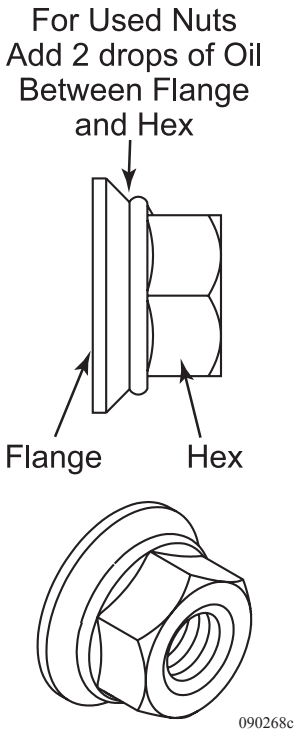

- Before installing the wheels, lubricate the hub pilot pads with a drop of oil to prevent galling. Do not lubricate any other wheel or hub surface.

- For a hub with intermittent pilot pads, position a pad at the twelve o'clock position to center the wheel and reduce runout.

**NOTE: Loosen and tighten lug nuts in a star pattern sequence. Sequence tighten to 50 ft. lbs. first, then sequence tighten to 500 lbs. Over-tightening can cause distortion.**

**WARNING: Never use wheels or lug nuts different than the original equipment as this could damage the wheel or the mounting system. Damage to the wheel or mounting system could cause a wheel to come off while the recreational vehicle is in motion.**

**Front Wheels:**

Slide the front wheel over the studs, being careful not to damage stud threads. Snug the nuts in sequence, do not tighten them fully until all have been seated. Tighten the nuts to 150 ft.lbs in sequence (as shown in the illustration).

**Dual Rear Wheels:**

Slide the inner dual wheel over the studs, being careful not to damage the stud threads. Align the handholds for valve access and slide the outer dual wheel over the studs, again being careful not to damage the stud threads.

Snug the nuts in sequence, do not tighten them fully until all have been seated. Tighten the nuts to 140 ft. lbs. using the sequence (as shown in the illustration). The hub mount wheels use two piece flange cap nuts for both front and rear applications. No inner cap nuts are required.

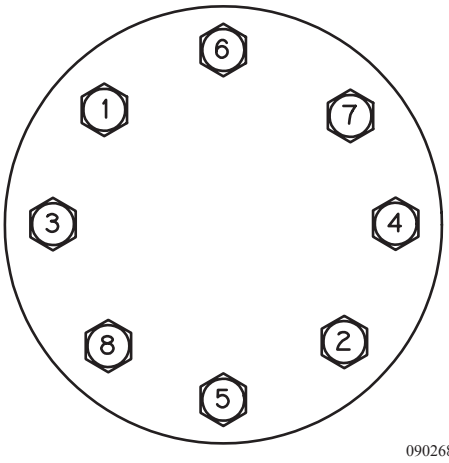

Nut Tightening Sequence

**Torque the Nuts Properly:**

- Tighten the wheel nuts to the recommended lug nut torque. Do not over tighten
- Maintain the nut torque at the recommended level through planned periodic checks or at 10,000 miles intervals, whichever comes first.
- If air wrenches are used they must be periodically calibrated for the proper torque output. Use a torque wrench to check the air wrench output and adjust the line pressure for the correct torque.

## Storage of Tires - Long Term

The motorhome is designed for recreation, not long-term storage. However, unless you are living in your motorhome full-time you will have a need to store it. Rubber tires age faster when not being used. A cool, dry, sealed garage is the preferred method of storage. Many recreational vehicles are stored outside in the elements. Some storage surfaces may cause tires to age prematurely. Placing a barrier (i.e. cardboard, plastic or plywood) between the tire and the storage floor/ground surface will help to protect the tires.

When the tire is anticipated to be out of service for a period of thirty days or more, the motorhome should be in the long-term storage condition. The ideal conditions include placing the motorhome on "jack stands" to remove all weight from the tires. Then the inflation pressure can be reduced by 15 psi. However, this is not always possible, with a few simple steps the aging effects from long-term storage or a non-use period can be reduced.

**NOTE: If the motorhome is stored with weight on the tires they should be inflated to the maximum inflation pressure as indicated on the Federal Identification Tag.**

- Thoroughly clean the tires.
- Unload the motorhome so there is minimum weight on the tires.
- Ensure the surface is reasonably level, firm, clean and has good drainage.
- Move the motorhome every three months to prevent cracking in bulge areas as well as flat spotting from prolonged sidewall strain and tread deflection.
- Cover the tires to block direct sunlight and ultraviolet rays.
- Store the motorhome out of a high ozone area.

Failure to take these steps can cause early deterioration and shorten the life of your tires. The type of surface the motorhome is parked upon will have an affect on much moisture accumulation occurs on the chassis and flooring. Moisture can eventually seep into the interior. Further, the type of surface can affect the tires.

- Gravel covered parking area still allows moisture to evaporate from the ground, through the gravel and to the underside of the motorhome.
- Sealed concrete pads allow better ventilation under the motorhome.
- Storage buildings with sealed concrete floors or heated storage facilities greatly reduce the amount of moisture accumulation and protect the motorhome from moisture damage.
- Wet, oily, or greasy surfaces should be avoided. Highly reflective surfaces such as sand or snow, should be avoided. Heat absorbent surfaces, such as black asphalt, will cause problems as well.

Before removing the motorhome from long-term storage thoroughly **inspect** each tire. This means a close examination of each tire tread area and the air pressure. If the pressure check indicates the tire has lost air during storage, inflate to the correct pressure for the current load before putting the motorhome into service.

## WEIGHING THE MOTORHOME

Proper weight distribution, load management and operating within established limitations will aid in safe and enjoyable travel. The information contained in this publication outlines guidelines and provides worksheets for weighing procedures.

Proper weight distribution and load management is an individual responsibility. Once the process and procedures are understood, weighing the motorhome really isn't complicated. In order to correctly manage load and weight distribution, more than one weight measurement will need to be taken and/or repeated. Each wheel position must be weighed to accurately determine the weight placed on each wheel position for proper weight computations.

The entire process of weigh management begins with the Gross Vehicle Weight Rating as listed on the Federal Certification Label. **This weight cannot be exceeded.**

Next is the Unloaded Vehicle Weight, meaning the weight of the motorhome full of fuel with engine fluid level full. Cargo Carrying Capacity can then be calculated. Once Cargo Carrying Capacity is determined, the motorhome can be loaded. After the motorhome is loaded it will need to be weighed again. These weight measurements will be used to ensure proper weight distribution and tire inflation pressures.

**Weight Terms:**

Numerous Federal, State and local governments mandate weight limits. Understanding the terminology and performing proper weighing procedure will help eliminate confusion. It is important to understand there are two reasons to weigh the motorhome. One to find out the **Cargo Carrying Capacity (CCC)** and the other to ensure no axle is overloaded.

The **Gross Axle Weight Rating (GAWR)** of the axles is listed on the federal certification label attached to the motorhome. This is the maximum allowable loaded weight on a particular axle. This label is generally located to the rear of the driver's seat, on the wall.

When the actual loaded weight of the motorhome, and the weight on each axle, is unknown, follow the recommended tire inflation pressure(s) listed on the federal certification label. When loading a motorhome never exceed the motorhome's **Gross Vehicle Weight Rating (GVWR)** or the **GAWR** for each axle.

**NOTE: Contact the tire manufacturer for further information concerning proper tire pressure inflation and other tire issues.**

The **Gross Vehicle Weight Rating (GVWR)** and **Gross Axle Weight Rating (GAWR)** listed on the Federal Certification Label attached to the motorhome will detail the chassis manufacturer's and/or the RV manufacturer's total vehicle maximum weight rating and per axle weight rating.

The **GVWR** is the maximum total weight for which the motorhome is rated - including passengers, fluids and cargo. The **GAWR** is the maximum weight for which a single axle is designed. The tires, wheels, axle, the motorhome frame and/or other components of the motorhome, could limit these per axle and total maximum weight ratings.

The Federal Certification Label is a guide in knowing the maximum loaded axle weight rating **GAWR**, and subsequently the correct tire inflation pressure for that weight. Every recreational vehicle, even of the same make and model, will vary in actual loaded axle weights because of different options and personal loads.

While the actual loaded axle weight should be below the **GAWR**, the motorhome must be weighed in a loaded condition to know its actual weight. Weigh the front axle, the total unit and the rear axle. It is possible for a motorhome to be within the **GVWR** yet overloaded on an axle. It is even possible for one wheel position to be overloaded, even though the **GAWR** has not been exceeded. For this reason it will be necessary to weigh each wheel position of the motorhome to give a clear indication of exactly how the weight of the motorhome is distributed.

Instructions and diagrams are presented on the following pages. When the total weight and the weight on each axle is known, the tire load data chart in this manual will show the correct cold inflation pressure per tire for each axle.

There are two important factors to consider when loading the motorhome: **total weight** and **balance**. When loading heavy objects keep them as low as possible, preferably on the floor or below in storage compartments. Load weight must be distributed as evenly as possible.

The following is an explanation of commonly used weight abbreviations.

- **Gross Vehicle Weight Rating (GVWR):**
  Maximum permissible weight of this motorhome. GVWR is equal to or greater than the sum of UVW plus CCC.

- **Unloaded Vehicle Weight (UVW):**
  Weight of this motorhome as built at factory with full fuel, engine oil and coolants. UVW does not include cargo, fresh water, LP-Gas, occupants or dealer installed accessories.

- **Cargo Carrying Capacity (CCC):**
  Equal to GVWR minus each of the following: UVW, full fresh potable water weight (including water heater), full LP-Gas weight, and SCWR. Tongue weight of towed vehicle and dealer installed equipment will reduce CCC.

- **Gross Combination Weight Rating (GCWR):**
  The maximum allowable loaded weight of this motorhome and any towed trailer or towed vehicle.

- **Gross Axle Weight Rating (GAWR):**
  Load-carrying capacity specified by manufacturer of a single axle system, as measured at tire ground interfaces.

- **Sleeping Capacity Weight Rating (SCWR):**
  The manufacturer's designated number of sleeping positions multiplied by 154 pounds.

**Tire Pressure:**

A motorhome may weigh slightly heavier on one side than on the other. Tire inflation pressure of the heavier side tires determine the inflation pressure for all tire(s) on that axle due to the weight transfer that occurs when cornering. The weight load will be transferred on the opposite side from the direction in which the motorhome is cornering.

Improperly inflated tires, or suspension that is incorrectly loaded, can result in poor fuel economy, poor handling and over-stressed chassis components. Vehicle loading will influence tire inflation pressure and the load carried by each axle. This is why each wheel position must be weighed. Motorhome axle configuration and floor plan styles will require different weighing procedures.

**NOTE: When weighing a motorhome, each tire on any axle must be inflated to the same pressure. The wheel position carrying the most weight will determine the tire inflation pressure for each tire of that particular axle.**

**Scales:**

Certified public scales are located in a variety of places such as moving and storage lots, farm suppliers with grain elevators, gravel pits, recycling companies and large commercial truck stops.

If you are not aware of a nearby public scale, check the local area telephone book yellow pages under "scales-public" section or "weighers." A nominal fee will be charged, but this is money wisely spent.

Weight scale types and weighing methods determine the procedure used to calculate proper tire inflation pressure and axle loading. There are several types of scales in use today. A platform scale will allow the entire motorhome to fit on the scale, which will read the **GVW** with only one scale recording required. A segmented platform scale is designed to weigh only one axle at a time, which may require two or three scale readings to determine the **GAW** or **GVW** total. A single axle scale enables one axle at a time. Some scales will read only one wheel position at a time due their physical size. Several scale readings may be required to determine the **GAW** or **GVW** total. Each wheel position will require weighing. This is referred to as a four corner or four point weigh. This type of weighing procedure will accurately determine what the correct tire inflation pressure should be. Depending on the type of scale being used, several different scale readings may be required.

**NOTE: The most accurate method to determine proper tire pressure is a four-corner or four point weigh. Each wheel position must be weighed independently. Weighing the entire axle will not accurately determine the total weight carried by that wheel position. When calculating the drive axle dual tire pressure using a independent corner weigh method, divide the total weight by two to determine the weight carried by each tire. Each wheel position must be weighed and recorded.**

During weighing, the scales as well as the motorhome must be as level as possible to obtain an accurate scale reading. Even though an axle or side is not physically on the scale, a definite lean in the motorhome will produce inaccurate scale readings.

## *Weight Label*

**MODEL YEAR:** _____ **MAKE:** _____ **MODEL:** _____

**UNIT NO.** _____ **CHASSIS VIN:** _____

| | | LBS. | KGS. |
|---|---|---|---|
| **GVWR** | (Gross Vehicle Weight Rating) is the maximum permissible weight of this fully loaded motorhome ..... | _____ | _____ |
| **UVW** | (Unloaded Vehicle Weight) is the weight of an exemplar Motorhome as manufactured at the factory with full fuel, engine oil and coolants (*1) ..... | _____ | _____ |
| **SCWR** | (Sleeping Capacity Weight Rating) is the manufacturer's designated number of sleeping positions multiplied by 154 pounds (70 kilograms) ..... | _____ | _____ |
| **CCC** | (Cargo Carrying Capacity) is the GVWR minus each of the following: UVW, full fresh (potable) water weight (including water heater), full LP-Gas weight and SCWR (*1)..... | _____ | _____ |
| **GCWR** | (Gross Combination Weight Rating) means the maximum allowable loaded weight of this motorhome and any towed trailer or towed vehicle.(*2)..... | _____ | _____ |
| | FACTORY INSTALLED OPTIONS are options installed at the factory but do not include dealer installed after market equipment... | _____ | _____ |

**CARGO CARRYING CAPACITY (CCC) COMPUTATION**

| | | |
|---|---|---|
| GVWR ..... | _____ | _____ |
| minus UVW ..... | _____ | _____ |
| minus fresh water (*3) weight of ___ gallons @ 8.3 lbs./gal ..... | _____ | _____ |
| minus LP-Gas weight of ___ gallons@ 4.2 lbs./gal ..... | _____ | _____ |
| minus SCWR of ___ persons @ 154 lbs./person..... | _____ | _____ |
| CCC for this motorhome (*4) ..... | _____ | _____ |

**WARNING: CONSULT OWNER MANUAL(S) FOR SPECIFIC WEIGHING INSTRUCTIONS AND TOWING GUIDELINES INCLUDING AUXILIARY BRAKE REQUIREMENTS FOR ANY TOWED TRAILER OR TOWED VEHICLE.**

**Factory installed options do not include dealer installed after market equipment.**

**WARNING:DO NOT EXCEED THE GVWR, GCWR AND/OR GAWR AFTER LOADING YOUR MOTORHOME WITH WATER, FUEL, PASSENGERS AND CARGO. GAWR (Gross Axle Weight Rating) means the maximum permissible load weight a specific axle is designed to carry. See Federal Certification Label for disclosure of The GAWR for each axle.**

(*1) The UVW and CCC have been determined by weighing an exemplar motorhome with some but not all optional equipment available for each model year, make and model of motorhome. The result of the weighing of the exemplar motorhome is then used in calculating the UVW and CCC of other motorhomes of same model year, make and model. Your actual UVW and CCC may vary based upon options ordered. Please contact the manufacturer for the actual weight of each option.
(*2) Consult your Owner's Manual for towing limitations, restrictions and other guidelines.
(*3) Your motorhome's fresh water tank and water heater taken together determine the gross fresh water capacity. Your usable fresh water capacity, however, may be less.
(*4) Dealer installed equipment and towed vehicle tongue weight will reduce CCC.

## Four Corner Weighing (Example)

**NOTE: Following scale readings and Gross Axle Weight Ratings are fictitious. Actual scale readings and Gross Axle Weight Ratings will vary with model and options.**

The motorhome must be weighed fully loaded to obtain accurate scale readings and to determine the proper tire pressure. All slide rooms must be in the retracted position.

- Take the rear axle **Gross Axle Weight Rating (GAWR)** and divide it by two. Example: Rear axle **GAWR** taken from the motorhome Vehicle Certification Label is 14,500 lbs. Divide the figure by 2, using chart below, record 7,250 lbs. on Scale B and D, line 1.
- Weigh the driver side rear corner (Scale B) and record weight on chart Scale B, line 2. Example: 4,400 lbs.
- Weigh the passenger side rear corner (Scale D) and record weight on chart Scale D, line 2. Example: 4,100 lbs.
- Add chart Scale B and D, lines 1, for **Gross Axle Weight Rating (GAWR)** and record on chart under Totals. Example: 14,500 lbs.
- Add chart Scale B and D, lines 2, for actual **Gross Axle Weight (GAW)** and record on chart under Totals. Example: 8,500 lbs.
- Actual **Gross Axle Weight (GAW)**. Example: 8,500 lbs., is not to exceed **Gross Axle Weight Rating (GAWR)**. Example: 14,500 lbs.

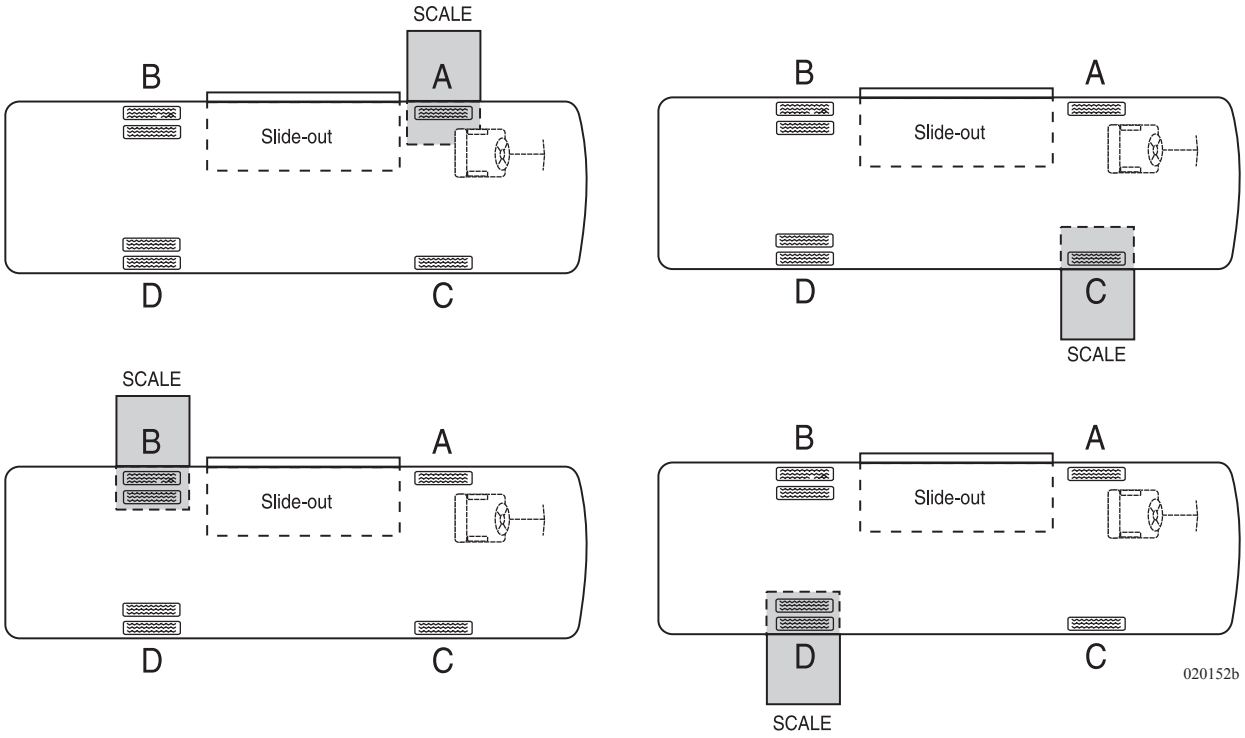

- Refer to the Example Tire Chart (Tire size 245/70R19.5). Use the highest actual weight, Scale B or D, line 2. Example 4,400 lbs. Determine the proper tire pressure for each tire using the Load Inflation chart. Example: 100 psi or stamp on the sidewall of the tire.
- Repeat above procedures to determine front axle Scale A and C, tire pressures.

| | ROADSIDE | | CURBSIDE | | TOTAL AXLE WEIGHT | GROSS AXLE WEIGHT RATING GAWR | GAWR Minus Total Axle Weight |
|---|---|---|---|---|---|---|---|
| FRONT AXLE | 1. 4,000 | + | 4,000 | = | 8,000 | | |
| | 2.(A) 3,000 | | (C) 2,800 | | 5,800 | 8,000 | 2,200 |
| DRIVE AXLE | 1. 7,250 | + | 7,250 | = | 14,500 | | |
| | 2.(B) 4,400 | | (D) 4,100 | | + 8,500 | + 14,500 | 6,000 |
| | | | Total Axle Weight | | = 14,300 UVW | = 22,500 GVWR | = 8,200 CCC |

**NOTE: These measurements are with a full tank and nobody in the motorhome.**

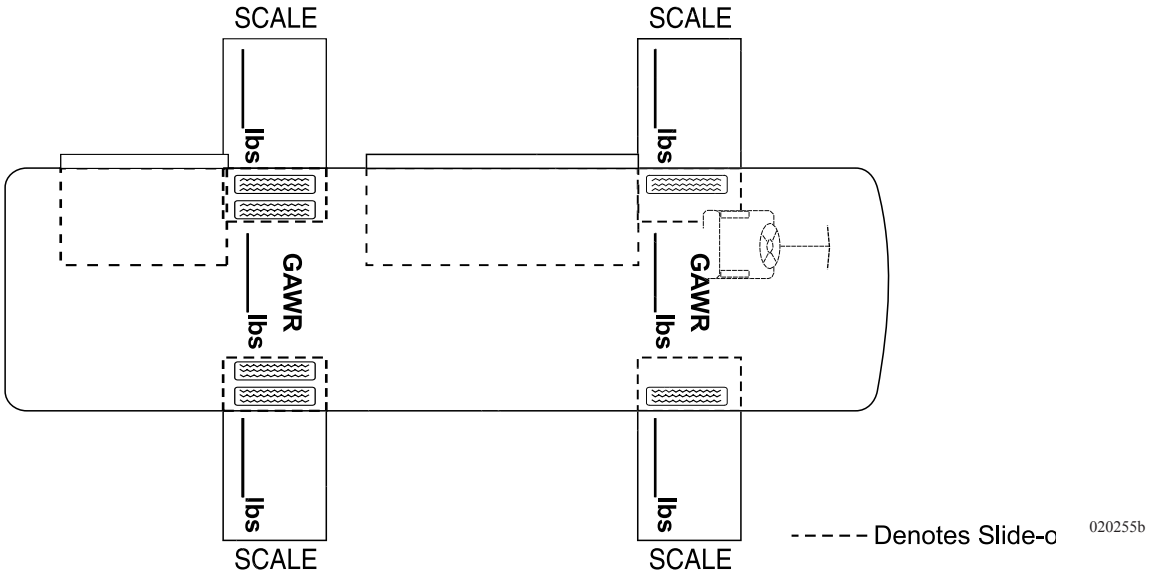


**WARNING: Improperly inflated or overloaded tires can cause a blowout. An overloaded axle can cause a component failure of the suspension system. Tire blowout or broken suspension components can lead to loss of vehicle control resulting in property damage, personal injury or death.**

**CAUTION: If actual weight carried by any tire is below the tire chart weight specification minimum tire pressure the minimum inflation pressure must be maintained. Tire pressure below the minimum inflation pressure can overheat and damage the tire casing leading to premature tire failure or blowout.**

**Load and Inflation Tables:**

The load and inflation table helps to determine the correct inflation for the motorhome tire, after properly weighing the motorhome. All pressures are rated at a cold psi. Cold conditions are defined as early in the morning before the day's ambient temperature, sun's radiant heat or the heat generated while driving have caused the tire pressure to temporarily increase. This means that the pressure should be checked early and when the motorhome has not been driven more than one mile. The check interval should be in the morning, before the "drive" trip and every morning on extended trips. A quality truck tire gauge with a multiple angle airhead is needed to ensure access to both dual wheel positions of the drive axle. Ensure the valve cap is replaced on the stem after the inflation is checked. This guarantees the valve core will remain free of dirt and foreign material. Material lodged between the valve core and internal stem can cause slow leaks resulting in tire failure.

**Understanding the Inflation Table**

- Tire Size is on the left margin of the Table.
- Determine the "Single" inflation reading or "Dual" inflation reading. This is denoted with a "D" or "S" on the Table. Single is for the Front axle. Dual is for the Drive axle.
- Find the corresponding psi at the top columns to see the corresponding maximum weight capacity for that psi.

**NOTE: Every load range has a maximum rating as well as a minimum rating. Do not exceed those ratings.**

- Rated load capacities are listed for individual tires in a Dual or Single position.

## *Example Tire Chart*

| TIRE SIZE | MAX Speed Rating (MPH) | Dual (D) Single (S) | INFLATION PRESSURE PSI | | | | | | | | | | | | |
|---|---|---|---|---|---|---|---|---|---|---|---|---|---|---|---|
| | | | 65 | 70 | 75 | 80 | 85 | 90 | 95 | 100 | 105 | 110 | 115 | 120 | 125 |
| 8R19.5 | 75 | D | 2350 | 2460 | 2570 | 2680 | 2780 | 2880 | 2980 | 3070 | 3160 | **3375(F)** | | | |
| | | S | 2410 | 2540 | 2680 | 2800 | 2930 | 3060 | 3170 | 3280 | 3400 | **3500(F)** | | | |
| 225/70R19.5 | 75 | D | | 2720 | 2860 | 3000 | 3115 | 3245 | **3415(F)** | | | | | | |
| | | S | | 2895 | 3040 | 3195 | 3315 | 3450 | **3640(F)** | | | | | | |
| 245/70R19.5 | 75 | D | | 3415 | 3515 | 3655 | **3875(F)** | 3940 | 4075 | **4375(G)** | | | | | |
| | | S | | 3640 | 3740 | 3890 | **4080(F)** | 4190 | 4335 | **4545(G)** | | | | | |
| 265/70R19.5 | 75 | D | | | | 3750 | 3930 | 4095 | 4300 | 4405 | 4560 | 4805 | 4860 | **5070(G)** | |
| | | S | | | | 3970 | 4180 | 4355 | 4540 | 4685 | 4850 | 5070 | 5170 | **5355(G)** | |
| 9R22.5 | 65 | D | 3120 | 3270 | 3410 | 3550 | 3690 | 3820 | **3950(F)** | | | | | | |
| | | S | 3190 | 3370 | 3560 | 3730 | 3890 | 4050 | 4210 | 4350 | **4500(F)** | | | | |
| 10R22.5 | 65 | D | 3690 | 3870 | 4040 | 4200 | 4375 | 4520 | 4670 | **4875(F)** | 4970 | 5110 | **5250(G)** | | |
| | | S | 3770 | 4000 | 4210 | 4410 | 4610 | 4790 | 4970 | **5150(F)** | 5320 | 5490 | **5680(G)** | | |
| 11R22.5 | 75 | D | | | | 4760 | 4950 | 5120 | 5300 | 5470 | **5750(G)** | **5800(H)** | | | |
| | | S | | | | 4990 | 5220 | 5430 | 5640 | 5840 | **6175(G)** | 6240 | 6430 | **6610(H)** | |
| 12R22.5 | 65 | D | | | | 5190 | 5390 | 5590 | 5780 | 5960 | 6150 | 6320 | 6500 | **6750(H)** | |
| | | S | | | | 5450 | 5690 | 5920 | 6140 | 6370 | 6590 | 6790 | 7010 | **7390(H)** | |
| 245/75R22.5 | 75 | D | | 3260 | 3425 | 3640 | 3740 | 3890 | 4080 | 4190 | 4335 | **4410(G)** | | | |
| | | S | | 3470 | 3645 | 3860 | 3980 | 4140 | 4300 | 4455 | 4610 | **4675(G)** | | | |
| 255/70R22.5 | 75 | D | | 3585 | 3765 | 3970 | 4110 | 4275 | 4410 | 4455 | 4610 | 4675 | **5070(H)** | | |
| | | S | | 3815 | 4005 | 4190 | 4370 | 4550 | 4675 | 4895 | 5065 | 5205 | **5510(H)** | | |
| 265/75R22.5 | 75 | D | | | 4040 | 4205 | 4370 | 4525 | 4685 | **4805(G)** | | | | | |
| | | S | | | 4070 | 4255 | 4440 | 4620 | 4800 | 4975 | 5150 | **5205(G)** | | | |
| 275/70R22.5 | 75 | D | | | | | 4535 | 4750 | 4960 | 5165 | 5370 | 5575 | 5775 | 5975 | **6175(H)** |
| | | S | | | | | 4885 | 5080 | 5305 | 5530 | 5750 | 5965 | 6185 | 6400 | **6610(H)** |
| 275/80R22.5 | 75 | D | | | | | 4855 | 5080 | 5305 | 5525 | 5745 | 5965 | 6180 | **6395(H)** | |
| | | S | | | | | 5265 | 5515 | 5755 | 6000 | 6235 | 6475 | 6710 | **6940(H)** | |
| 295/75R22.5 | 75 | D | | | 4690 | 4885 | 5070 | 5260 | 5440 | **5675(G)** | 5800 | **6005(H)** | | | |
| | | S | | | 4725 | 4945 | 5155 | 5370 | 5510 | 5780 | 5980 | **6175(G)** | 6370 | **6610(H)** | |
| 295/80R22.5 | 75 | D | | | | 4855 | 5100 | 5335 | 5570 | 5805 | 6035 | 6265 | 6490 | 6720 | **6940(H)** |
| | | S | | | | 5480 | 5750 | 6020 | 6285 | 6550 | 6810 | 7070 | 7320 | 7580 | **7830(H)** |
| 315/80R22.5 | 75 | D | | | | | 5840 | 6070 | 6395 | 6540 | 6770 | 6940 | 7210 | **7610(J)** | 7390 |
| | | S | | | | | 6415 | 6670 | 6940 | 7190 | 7440 | 7610 | 7920 | **8270(J)** | 8820 |
| 285/75R24.5 | 75 | D | | | 4740 | 4930 | 5205 | 5310 | 5495 | **5675(G)** | | | | | |
| | | S | | | 4770 | 4990 | 5210 | 5420 | 5675 | 5835 | 6040 | **6175(G)** | | | |

EXAMPLE

Example Tire Chart modified

**Cargo Carrying Capacity:**

When weighing the motorhome it is important to understand that each motorhome, even of the same model year, floorplan and length will weigh different due to options and accessories. The **Gross Vehicle Weight Rating (GVWR)**, **Gross Combination Weight Rating (GCWR**) and/or **Gross Axle Weight Rating (GAWR)** must not be exceeded.

**GVWR** of the vehicle limits the weight of the entire load combination, regardless of the mix of water, LP-Gas, passengers, or cargo.

It is important to understand the weighing process is performed in two phases. The first phase is determining the **Cargo Carrying Capacity (CCC)** and the second to ensure the **GVWR** is not exceeded when adjusting tire pressures. The weighing process should start by recording the **GVWR** from the Federal Weight Label, then weighing the motorhome unloaded, without passengers and with a full fuel tank. Engine and transmission fluid levels must be full. This is known as the **Unloaded Vehicle Weight (UVW)**. Once this weight has been recorded it can be subtracted from the **GVWR**.

GVWR 35,000 - UVW 20,000 = A 15,000

Next, begin to calculate the **Cargo Carrying Capacity (CCC)**.

Fresh water weight and LP-Gas weight can now be subtracted from the remaining total line A.

- Water weight is the number of gallons multiplied by 8.3.
- LP-Gas weight is the number of gallons multiplied by 4.2.

A 10-gallon water heater with a 40-gallon fresh tank would total 50 gallons times 8.3, or 415 pounds.

A 30-gallon LP-Gas tank will have 24 gallons of LP-Gas due to the 80% liquid capacity. This would mean 24 gallons multiplied by 4.2, or 100.8 pounds.

A 15,000 - 415 = B 14,585

B 14,585 - 100.8 = C 14,484.2

Next, calculate the **Sleep Capacity Weight Rating (SCWR)**. The manufacturer's designated number of sleeping positions for the motorhome multiplied by 154 pounds.

The 154 pounds (70kg) is the average weight established by the US Federal Government and Transport Canada, and is used to arrive at **Cargo Carrying Capacity (CCC)**. However, actual sleep capacity weight may be greater. The **SCWR** is not intended to limit the sleeping capacity to a specified weight.

Example: If the manufacturer has designated the motorhome sleeping position at 4 (616 pounds) and there are 4 people who weight 200, 200, 178 and 138 pounds, totaling 716 pounds, that doesn't mean the sleeping capacity is reduced to 3 individuals, but rather the **CCC** is reduced by 100 pounds due to the actual passenger weight.

C 14,484.2 - SCWR 716 = CCC 13,768.2

**Cargo Carrying Capacity (CCC)** is how much cargo the motorhome can carry. However, tongue weight of a towed vehicle will further reduce this amount.

Now the motorhome can be fully loaded and weighed to ensure **GVWR** is not exceeded. When weighing the motorhome, all slide rooms must be in the retracted position. The motorhome must remain as level as possible on the scale, even though an axle or side is not physically on the scale. Once the motorhome is fully loaded and weighed to obtain an accurate scale reading, determine the proper tire pressure.

- Each wheel position must be weighed to accurately determine the weight carried at each wheel position.
- Refer to the previous examples on how to weigh each wheel position. Each wheel position weight must be weighed and recorded to determine proper tire inflation.
- Wheel position weights are not to exceed any **Gross Axle Weight Rating (GAWR)** and **Gross Vehicle Weight Rating (GVWR)** as printed on the Motorhome Vehicle Certification Label.
- Compare wheel position weights with weigh ratings on the label. Do not operate if wheel position weights exceed maximum specifications. Items will need to be removed until rating weight is within specification.

**WARNING: Further instructions for towing guideline, including auxiliary brake requirements for any towed trailer or towed vehicle, are found in other areas of this manual.**

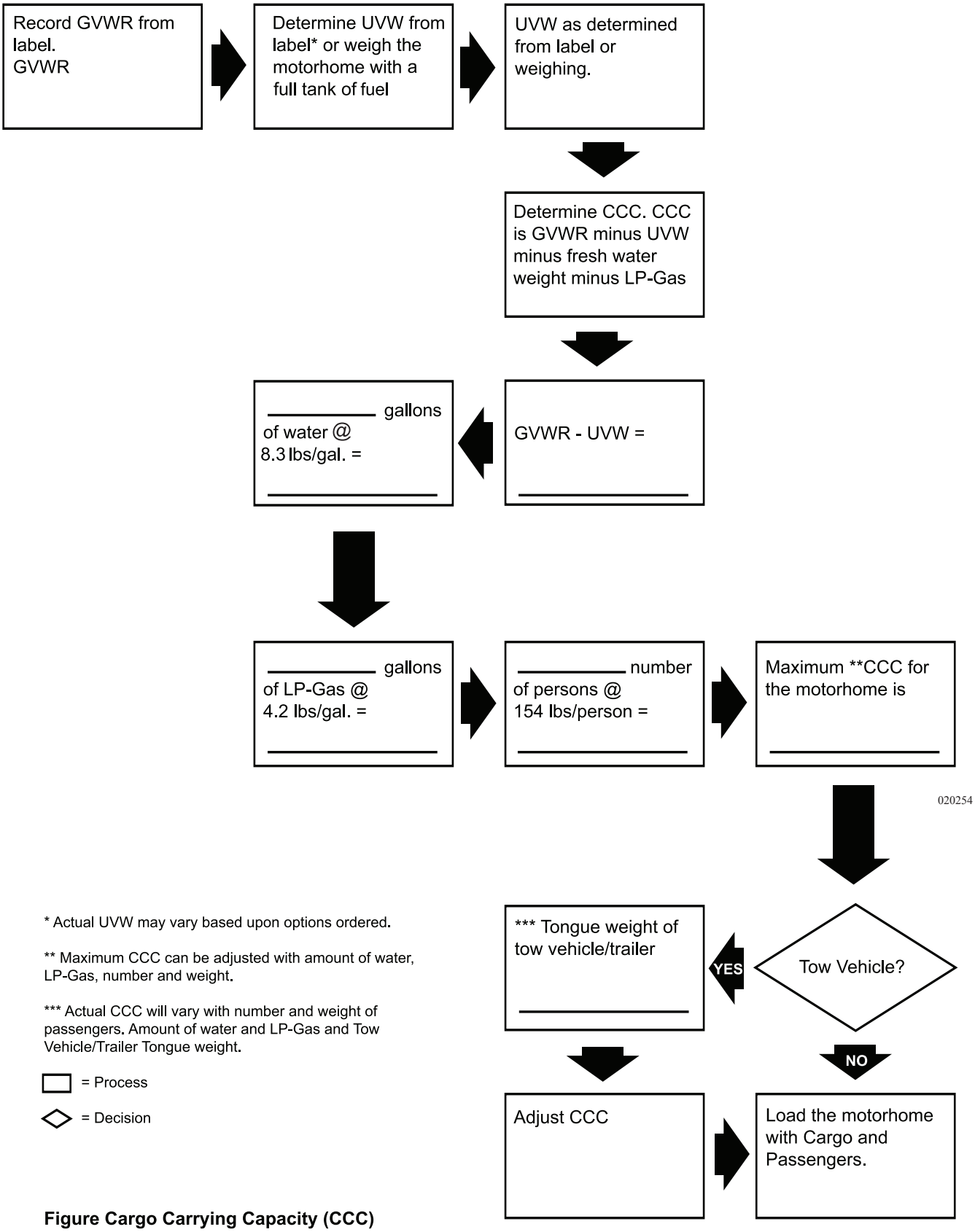


* Actual UVW may vary based upon options ordered.

** Maximum CCC can be adjusted with amount of water, LP-Gas, number and weight.

*** Actual CCC will vary with number and weight of passengers. Amount of water and LP-Gas and Tow Vehicle/Trailer Tongue weight.

▭ = Process

◇ = Decision

**Figure Cargo Carrying Capacity (CCC)**

| | ROADSIDE | | CURBSIDE | | TOTAL AXLE WEIGHT | GROSS AXLE WEIGHT RATING GAWR | GAWR Minus Total Axle Weight |
|---|---|---|---|---|---|---|---|
| FRONT AXLE | 1. 6,500 | + | 6,500 | = | 13,000 | | |
| | 2.(A) 5,000 | | (C) 4,000 | | 9,000 | 13,000 | 4,000 |
| DRIVE AXLE | 1. 10,000 | + | 10,000 | = | 20,000 | | |
| | 2.(B) 7,100 | | (D) 6,900 | | + 14,000 | + 20,000 | 6,000 |
| | | | Total Axle Weight | | = 23,000 UVW | = 33,000 GVWR | = 10,000 CCC |

**NOTE: These measurements are with a full tank and nobody in the motorhome.**

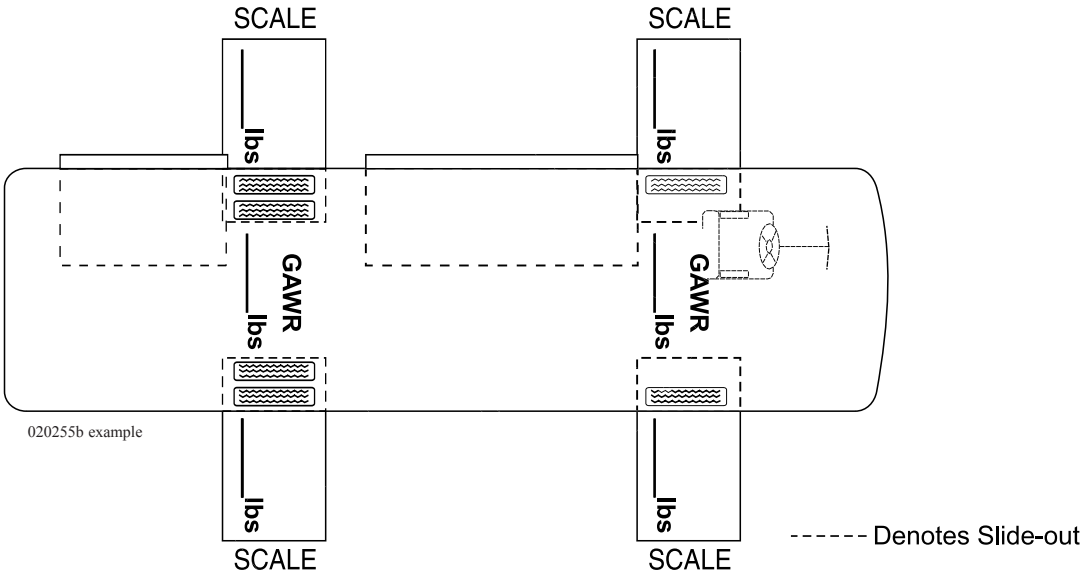


| | FORMULA | UVW 23,000 CAPACITY | | CCC 10,000 |
|---|---|---|---|---|
| FRESH WATER | Subtract Gallon @ 8.3 lbs/gal | 100 X 8.3 = 830 | - | 9,170 |
| WATER HEATER | Subtract Gallon @ 8.3 lbs/gal | 10 X 8.3 = 83 | - | 9,087 |
| PROPANE | Subtract Gallon @ 4.2 lbs/gal | 40 X 4.2 = 168 | - | 8,919 |
| SLEEP CAPACITY WEIGHT RATING | Subtract Persons @ 154 lbs/person | 5 X 154 = 770 | - | 8,149 |
| | | Maximum Cargo Carrying Capacity CCC | | 8,149 |

Maximum Cargo Carrying Capacity will change by varying any of the capacities. Tongue Weight of a towed vehicle will reduce the Cargo Carrying Capacity (CCC).

| | ROADSIDE | | CURBSIDE | | TOTAL AXLE WEIGHT | GROSS AXLE WEIGHT RATING GAWR | GAWR Minus Total Axle Weight |
|---|---|---|---|---|---|---|---|
| FRONT AXLE | 1. | + | | = | | | |
| | 2.(A) | | (C) | | | | |
| DRIVE AXLE | 1. | + | | = | | | |
| | 2.(B) | | (D) | | + | + | |
| | | | Total Axle Weight | | = UVW | = GVWR | = CCC |

**NOTE: These measurements are with a full tank and nobody in the motorhome.**

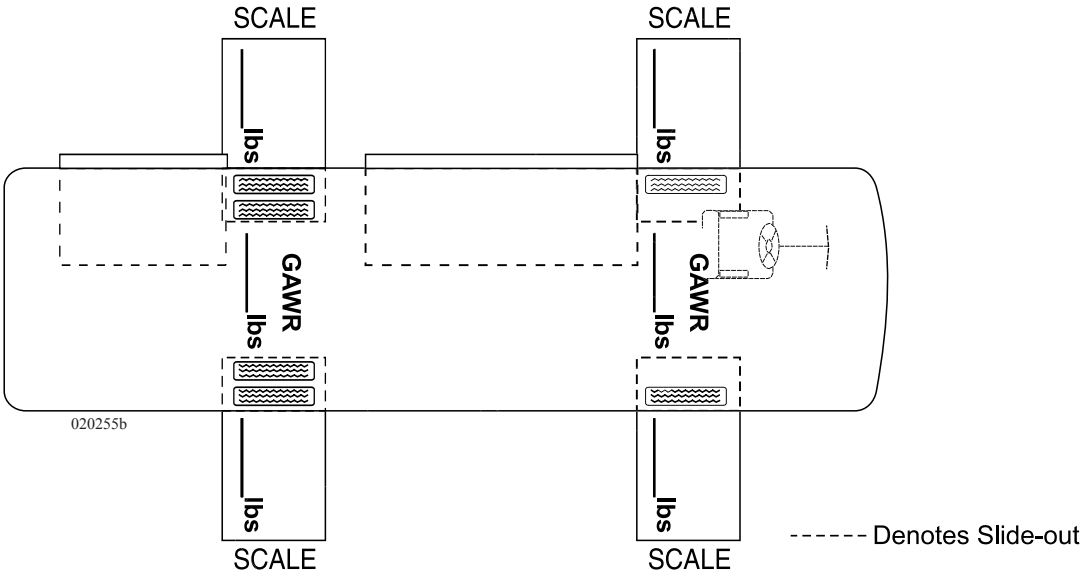


| | FORMULA | UVW CAPACITY | | CCC |
|---|---|---|---|---|
| FRESH WATER | Subtract Gallon @ 8.3 lbs/gal | X 8.3 = | - | |
| WATER HEATER | Subtract Gallon @ 8.3 lbs/gal | X 8.3 = | - | |
| PROPANE | Subtract Gallon @ 4.2 lbs/gal | X 4.2 = | - | |
| SLEEP CAPACITY WEIGHT RATING | Subtract Persons @ 154 lbs/person | X 154 = | - | |
| | | Maximum Cargo Carrying Capacity CCC | | |

Maximum Cargo Carrying Capacity will change by varying any of the capacities. Tongue Weight of a towed vehicle will reduce the Cargo Carrying Capacity (CCC).

DATE: _____

PLACE: _____

FRONT: _____ + _____ = _____
LEFT RIGHT TOTAL

REAR: _____ + _____ = _____
LEFT RIGHT TOTAL

= _____
TOTAL GROSS VEHICLE WEIGHT

DATE: _____

PLACE: _____

FRONT: _____ + _____ = _____
LEFT RIGHT TOTAL

REAR: _____ + _____ = _____
LEFT RIGHT TOTAL

= _____
TOTAL GROSS VEHICLE WEIGHT

DATE: _____

PLACE: _____

FRONT: _____ + _____ = _____
LEFT RIGHT TOTAL

REAR: _____ + _____ = _____
LEFT RIGHT TOTAL

= _____
TOTAL GROSS VEHICLE WEIGHT

DATE: _____

PLACE: _____

FRONT: _____ + _____ = _____
LEFT RIGHT TOTAL

REAR: _____ + _____ = _____
LEFT RIGHT TOTAL

= _____
TOTAL GROSS VEHICLE WEIGHT

DATE: _____

PLACE: _____

FRONT: _____ + _____ = _____
LEFT RIGHT TOTAL

REAR: _____ + _____ = _____
LEFT RIGHT TOTAL

= _____
TOTAL GROSS VEHICLE WEIGHT

DATE: _____

PLACE: _____

FRONT: _____ + _____ = _____
LEFT RIGHT TOTAL

REAR: _____ + _____ = _____
LEFT RIGHT TOTAL

= _____
TOTAL GROSS VEHICLE WEIGHT

DATE: _____

PLACE: _____

FRONT: _____ + _____ = _____
LEFT RIGHT TOTAL

REAR: _____ + _____ = _____
LEFT RIGHT TOTAL

= _____
TOTAL GROSS VEHICLE WEIGHT

DATE: _____

PLACE: _____

FRONT: _____ + _____ = _____
LEFT RIGHT TOTAL

REAR: _____ + _____ = _____
LEFT RIGHT TOTAL

= _____
TOTAL GROSS VEHICLE WEIGHT

020263

## VIEWS - Front

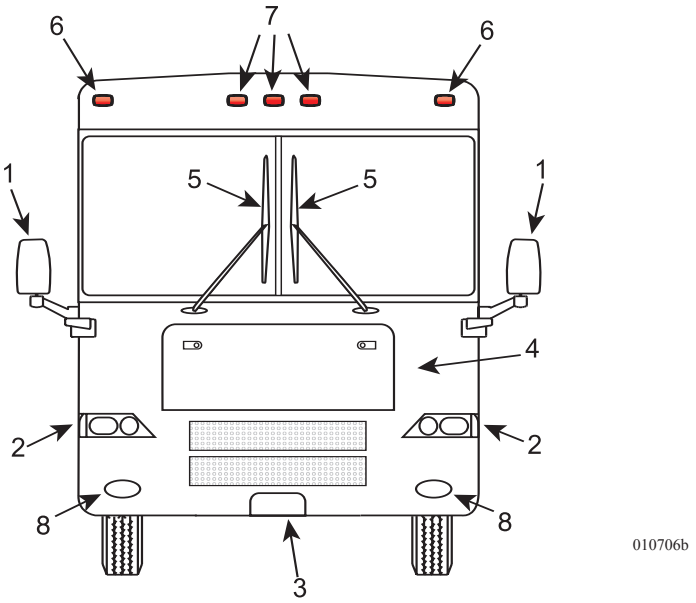


| FRONT EXTERIOR | |
|---|---|
| 1 Mirrors | 5 Windshield Wipers |
| 2 Headlights | 6 Clearance Lights |
| 3 License Plate | 7 Identification Lights |
| 4 Engine Access Door | 8 Fog Lights |

## Rear

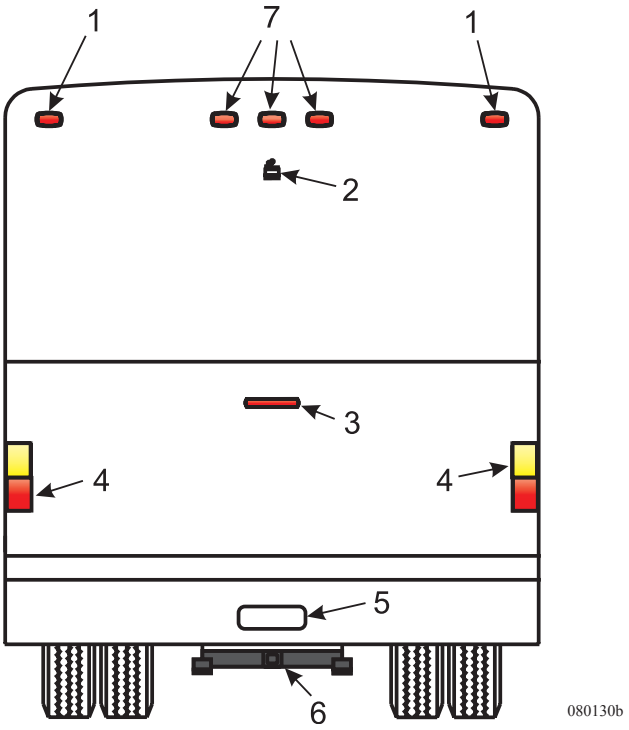


| REAR EXTERIOR | |
|---|---|
| 1 Clearance Lights | 5 License Plate |
| 2 Rear View Camera | 6 Rear Tow Hitch |
| 3 Third Brake Light | 7 Identification Lights |
| 4 Taillight | |

## Roadside

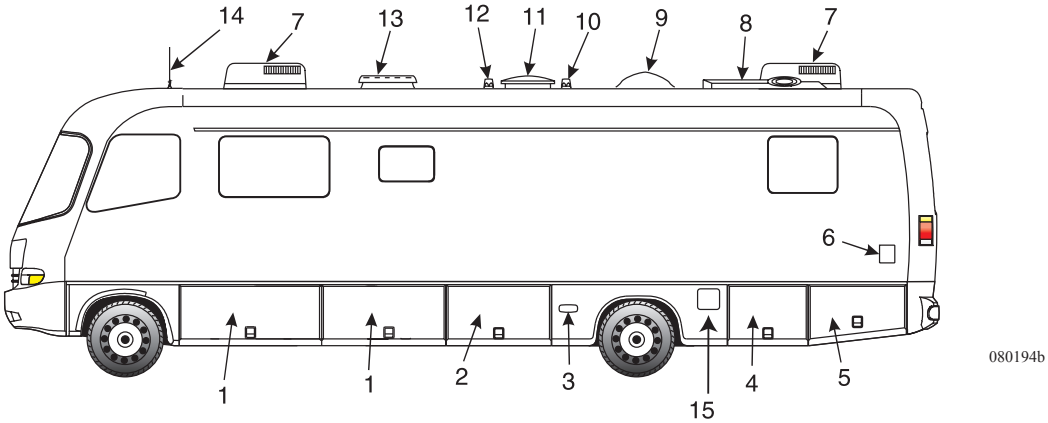


| ROADSIDE EXTERIOR | |
|---|---|
| 1 Storage Compartment | 8 TV Antenna |
| 2 Generator/Leveling Jack Pump | 9 Skylight Dome |
| 3 Marker Light | 10 Toilet Vent |
| 4 Water Control Service Center | 11 Exhaust Vent - Bath |
| 5 Shore Cord/Transfer Switch | 12 Holding Tank Vent |
| 6 Gravity Fill | 13 Exhaust Vent - Galley |
| 7 Roof Air Conditioner | 14 Radio Antenna |
| | 15 Fuel Fill |

**NOTE: Difference in models and floor plans may vary locations of items.**

## Curbside

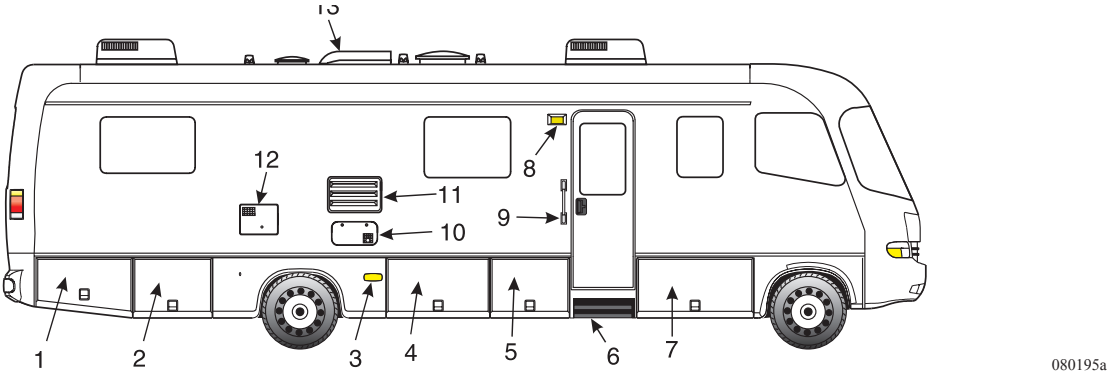


| CURBSIDE EXTERIOR | |
|---|---|
| 1 Storage Compartment/Inverter or Converter | 9 Grab Handle |
| 2 House Batteries & Disconnect | 10 Furnace/Heater Access |
| 3 Marker Light | 11 Refrigerator Access |
| 4 LP Tank Access & Controls | 12 Water Heater |
| 5 Storage Compartment | 13 Refrigerator Vent |
| 6 Entry Steps | |
| 7 Chassis Disconnect & Electrical Panel | |
| 8 Porch Light | |

**NOTE: Difference in models and floor plans may vary locations of items.**

## SPECIFICATIONS - DIMENSIONS CHART

| MODELS | 33PBD | 34SBD | 34PBD | 34PDT | 36PED | 36WDD | 36DBD | 37PCD | 37PCT |
|---|---|---|---|---|---|---|---|---|---|
| Wheelbase | 228" | 228" | 228" | 228" | 238" | 238" | 238" | 242" | 242" |
| Overall Length | 33' 11" | 34' 10" | 34' 10" | 34' 10" | 36' 5" | 36' 5" | 36' 5" | 36' 11" | 36' 11" |
| Overall Height, Including A/C, Ford | 11'-9" | 11'-9" | 11'-9" | 11'-9" | 11'-9" | 11'-9" | 11'-9" | 11'-9" | 11'-9" |
| Overall Height, Including A/C, Workhorse | 11'-8" | 11'-8" | 11'-8" | 11'-8" | 11'-8" | 11'-8" | 11'-8" | 11'-8" | 11'-8" |
| Interior Height | 6' 6" | 6' 6" | 6' 6" | 6' 6" | 6' 6" | 6' 6" | 6' 6" | 6' 6" | 6' 6" |
| Interior Width | 94.5" | 94.5" | 94.5" | 94.5" | 94.5" | 94.5" | 94.5" | 94.5" | 94.5" |
| Exterior Width | 100.5" | 100.5" | 100.5" | 100.5" | 100.5" | 100.5" | 100.5" | 100.5" | 100.5" |

| | 33PBD | 34SBD | 34PBD | 34PDT | 36PED | 36WDD | 36DBD | 37PCD | 37PCT |
|---|---|---|---|---|---|---|---|---|---|
| **FORD** | | | | | | | | | |
| Gross Vehicle Weight Rating | 22,000 lbs. | 22,000 lbs. | 22,000 lbs. | 22,000 lbs. | 22,000 lbs. | 22,000 lbs. | 22,000 lbs. | 22,000 lbs. | 22,000 lbs. |
| Gross Combined Weight Rating | 26,000 lbs. | 26,000 lbs. | 26,000 lbs. | 26,000 lbs. | 26,000 lbs. | 26,000 lbs. | 26,000 lbs. | 26,000 lbs. | 26,000 lbs. |
| Front Gross Axle Weight Rating | 7,500 lbs. | 7,500 lbs. | 7,500 lbs. | 7,500 lbs. | 7,500 lbs. | 7,500 lbs. | 7,500 lbs. | 7,500 lbs. | 7,500 lbs. |
| Rear Gross Axle Weight Rating | 14,500 lbs. | 14,500 lbs. | 14,500 lbs. | 14,500 lbs. | 14,500 lbs. | 14,500 lbs. | 14,500 lbs. | 14,500 lbs. | 14,500 lbs. |
| **WORKHORSE** | W-22 | W-22 | W-22 | W-22 | W-22 | W-22 | W-22 | W-22 | |
| Gross Vehicle Weight Rating | 22,000 lbs. | 22,000 lbs. | 22,000 lbs. | 22,000 lbs. | 22,000 lbs. | 22,000 lbs. | 22,000 lbs. | 22,000 lbs. | N/A |
| Gross Combined Weight Rating | 26,000 lbs. | 26,000 lbs. | 26,000 lbs. | 26,000 lbs. | 26,000 lbs. | 26,000 lbs. | 26,000 lbs. | 26,000 lbs. | N/A |
| Front Gross Axle Weight Rating | 8,000 lbs. | 8,000 lbs. | 8,000 lbs. | 8,000 lbs. | 8,000 lbs. | 8,000 lbs. | 8,000 lbs. | 8,000 lbs. | N/A |
| Rear Gross Axle Weight Rating | 14,500 lbs. | 14,500 lbs. | 14,500 lbs. | 14,500 lbs. | 14,500 lbs. | 14,500 lbs. | 14,500 lbs. | 14,500 lbs. | N/A |

| MODELS | 33PBD | 34SBD | 34PBD | 34PDT | 36PED | 36WDD | 36DBD | 37PCD | 37PCT |
|---|---|---|---|---|---|---|---|---|---|
| Water Heater | 10 gal. | 10 gal. | 10 gal. | 10 gal. | 10 gal. | 10 gal. | 10 gal. | 10 gal. | 10 gal. |
| Grey Tank | 42 gal. | 40 gal. | 42 gal. | 42 gal. | 54 gal. | 54 gal. | 42 / 39gal. | 45 gal | 45 gal |
| Black Tank | 42 gal. | 42 gal. | 42 gal. | 42 gal. | 45 gal. | 45 gal. | 42 / 39gal. | 54 gal | 54 gal |
| Fresh Tank | 60 gal. | 60 gal. | 60 gal. | 60 gal. | 60 gal. | 60 gal. | 60 gal. | 60 gal | 60 gal |
| LP Tank * | 24 gal. | 24 gal. | 24 gal. | 24 gal. | 24 gal. | 24 gal. | 24 gal. | 24 gal. | 24 gal. |

**Actual filled LP capacity is 80% of listing due to safety shut off required on tank.*

**NOTE: This chart reflects product specifications available at the time of printing. Therefore any floor plans introduced thereafter may not be reflected in the chart. All other information contained throughout the manual will still apply.**

**NOTE: All tank capacities are estimated based upon calculations provided by the tank manufacturers and represent approximate capacities. The actual "usable capacity" may be greater or less then the estimated capacities based upon fabrication and installation of the tanks.**

## SMOKE DETECTOR

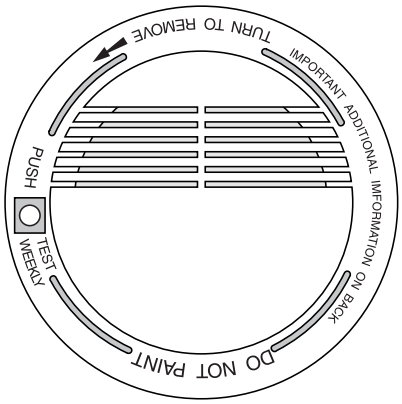


Statistics show that most fire casualties are not caused by direct flame, but by less visible smoke (products of combustion). The smoke detector responds to both visible and invisible products of combustion. The smoke detector will automatically return from alarm to normal state when the reason for activation, the presence of smoke, is completely removed. Fires are commonly caused by smoking in bed, leaving children unattended or using flammable cleaning fluids. Please be safety conscious and avoid unnecessary risk.

**WARNING: There is no way to insure there will be no injury or loss of life in a fire; however, the smoke detector is intended to help reduce the risk of tragedy. Additional smoke detectors may help to reduce the risk. Proper use and care of the smoke detector could save lives.**

### *Operation*

When a 9 Volt DC battery is correctly connected, the smoke alarm is operating. The LED will flash every minute showing the battery is supplying power. A load alarm will sound when a production of combustion is sensed.

**NOTE: The unit will not operate without a battery. A battery flag will pop up preventing the unit from being installed to the mounting bracket without a battery. Carbon zinc batteries average a service life of one year. Alkaline batteries average a service life of one to two years.**

### *Testing*

Simply press the test button on the smoke alarm cover for approximately three seconds. The alarm will sound if all electronic circuitry, horn and battery are working properly. The smoke alarm should be tested at least once a week when the motorhome is in use, prior to each trip and when the motorhome has been in storage. When testing the smoke alarm it is advised to stand at arm's length.

**CAUTION: Never use an open flame to test the smoke alarm. You may ignite and set fire to the alarm and to the motorhome.**

## Maintenance

A smoke alarm is designed to be as maintenance free as possible. However, there are some simple steps to perform in order to keep the smoke alarm working properly:

- Test the smoke alarm once a week.
- Keep a supply of 9 Volt DC batteries on hand.
- Vacuum the slots in the cover and sides with a soft brush attachment every month. Test the smoke alarm once the unit has been vacuumed.
- The smoke alarm should be cleaned every six months to help keep the unit working efficiently.
- The smoke alarm will beep once a minute when a low battery condition exists. The battery must be replaced immediately.

## Troubleshooting

If the alarm does not sound when the test button is pushed, or with a smoke test, try the following:

- Inspect for obvious damage.
- Check for the recommended battery type.
- Check the battery for proper connection or replace the battery if needed.
- Gently vacuum as recommended.

If these procedures do not correct the problem, do not attempt repairs. If the smoke alarm is within the warranty period and the terms indicate the nature of the problem, return the unit to your dealer. Smoke detectors beyond the warranty period cannot be economically repaired.

## LP-GAS DETECTOR

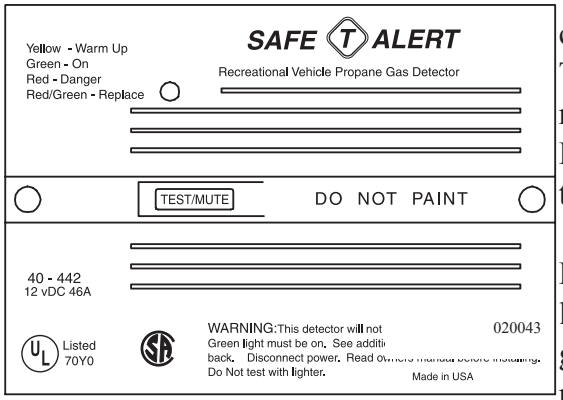


The LP-Gas detector is required safety equipment in RVs. American National Standards Institute (ANSI) A119.2 - Fire & Life Safety 3-4.8 LP Gas Detectors states "An LP Gas detector must be installed in any RV that contains an LP Gas appliance and an electrical system. The LP Gas detector must be listed as suitable for use in recreational vehicles under the requirement of UL 1484 Residential Gas Detectors, and be installed according to the terms of its listing."

It detects both LP-Gas and methane gas. Liquefied Petroleum (LP) Gas is heavier than air; methane gas is lighter than air. LP-Gas will settle to the lowest point, generally the floor of the motorhome. Methane gas will rise. The gas detector is also sensitive to other fumes such as hair spray, of which most contain butane as the propellant. Butane, like propane, is heavier than air and will settle to the floor level where it will be detected. When this occurs, reset the detector to stop the alert sound.

**About the LP-Gas Detector:**

It is important to be aware of the difference between a gas leak versus gas escaping from an unlit, open burner. Pure propane vapors from a leaking pipe or gas fitting are heavier than air and will build up their heaviest concentration at the leak and float down until they mix with air. Gas from open burners is intentionally mixed with air to induce burning and will dissipate into the air. When mixed with air, the gas becomes only marginally heavier than air and will expand outward. If a gas burner is left on, the area around the burner, range, and adjoining counter space will be combustible and can cause injury and damage if ignited. This condition will exist for an extended time period and eventually the gas will reach the detector's location and be detected.

**NOTE: The LP detector only indicates the presence of propane gas at its sensor. Combustible levels of propane gas may be present in other areas. This detector is intended for the detection of propane gas ONLY.**

It has not been tested to detect any other gas. However, other volatile gases (nuisance gases), most of them flammable in various concentrations, may cause the detector to alarm. Some products that may cause the detector to alarm are alcohol, liquor, kerosene, gasoline, deodorants, colognes, propellants used in spray cans and cleaning solvents. In some cases vapors from the glues and adhesives used in the manufacturing of the motorhome may also cause the detector to alarm for several months after the date of manufacture. If it is determined that the detector has false alarmed because of the above mentioned nuisance gases, reset the detector and air out the vehicle with fresh outside air.

Take precautions to be sure one of these nuisances has not masked an actual gas alarm condition. The detector draws less current than one instrument panel lamp. The detector will operate to detect gas until the battery is drained down to 7.0 Volts. The detector must be supplied with a voltage higher than 7.0 Volts, for it to operate properly. If the power source is disconnected, or if the power is otherwise interrupted, the detector will not operate.

The LP-Gas leak detector has a self-check circuit which runs at all times while the detector is powered. In the event that the circuitry fails, a failure alarm will sound and the operating indicator will cease to light.

**LP-Gas Detector Operation:**

Upon first application of power the LED will flash yellow for three minutes while the detector is stabilizing. At the end of the start cycle the LED will turn Green, indicating full operation. If the detector senses unsafe levels of gas it will immediately sound an alarm. The gas detector operates on 12 Volt DC, with a current draw less than 1/10th of one amp.

**CAUTION: The detector will not alarm during the three minute warm up cycle.**

## *Testing*

Press the **TEST** switch any time during the warm up cycle or while in normal operation. The LED should flash red and the alarm should sound. Release the switch. This is the only way the detector should be tested. The test feature checks full operation of the detector.

**WARNING: Test the operation of this detector after the motorhome has been in storage, before each trip and at least once per week during use.**

## *Alarm*

The **red** LED will flash and the alarm will sound whenever a dangerous level of propane or methane gas is detected. The detector will continue to alarm until the gas clears or the **Test/Mute** switch is pressed.

**Procedures to Take During an Alarm:**

1. Turn off all gas appliances, (stove, heaters, furnace), extinguish all flames and smoking material. Evacuate, leave doors and windows open.
2. Turn off the propane tank valve.
3. Have a qualified professional determine and repair the source of leak.

**CAUTION: Do Not re-enter until the problem is corrected.**

**Potential Sources of LP Gas Leaks When Operating the Motorhome:**

- Cooktop Burners
- Oven
- Furnace
- Refrigerator
- Water Heater
- Defective Regulator
- Defective LP-Gas Connection
- Portable Propane Powered Equipment

**Alarm Mute:**

Press the **Test-Mute** button when the detector is in alarm.

1. The **red** LED will continue to flash and the alarm will beep every 30 seconds until the gas level has dropped to a safe level.
2. The LED will flash **green** until the end of the **Mute** cycle.
3. If dangerous gas levels return before the end of the **Mute** cycle, the alarm will beep four times and return to phase 1.
4. After two minutes the detector will return to normal operation (solid **green**) or resound the alarm if dangerous levels of gas remain in the area.

**Fault Alarm:**

Should the microprocessor sense a fault in the gas detector, a fault alarm will sound twice every 15 seconds. The LED will alternately flash **red to green** and the **MUTE** switch will not respond to any command. The gas detector must be repaired or replaced.

## *Maintenance*

1. Vacuum the dust off the detector cover weekly (more frequently in dusty locations) using the soft brush attachment of the vacuum.
2. Do not spray cleaning agents or waxes directly onto the front panel. This action may damage the sensor, cause an alarm or cause a detector malfunction.

## CARBON MONOXIDE DETECTOR

American National Standards Institute **(ANSI) A119.2 -** Fire & Life Safety 3-4.6 Carbon Monoxide Detectors states *"All RVs equipped with an internal combustion engine or designed with features to accommodate future installation of an internal combustion engine and truck campers shall be equipped with a listed CO detector installed in accordance with its listing."*

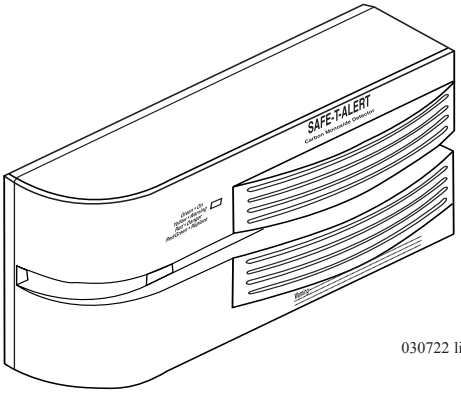


030722 line

The motorhome is equipped with such a carbon monoxide detector. Everyone is at risk with carbon monoxide poisoning. carbon monoxide (CO) is a colorless, odorless and tasteless gas that binds with hemoglobin reducing the body's ability to absorb and carrying oxygen to vital organs. Even low levels of CO have been known to cause brain and other vital organ damage in unborn infants, with no effect on the mother.

When removed from exposure, the symptoms dissipate as carbon monoxide is expelled through the lungs. Level of contamination in the body reduces at half-life increments at approximately four-hour intervals. Treatment with oxygen will quicken recovery time.

In cases of mild exposure, the symptoms may include: a slight headache, nausea, vomiting and fatigue. Some consider this a "Flu-like Symptom." Symptoms for medium exposure may include a severe throbbing headache, drowsiness, confusion and fast heart rate. Extreme exposure can result in unconsciousness, convulsions, cardio-respiratory failure and death. Young children and household pets may be the first affected. Other highly sensitive people would include the elderly and people with lung or heart disease or anemia.

The CO detector is designed to detect the toxic CO Gas resulting from incomplete combustion of any fuel. This can be gasoline, propane, natural gas, oil, charcoal or wood. Anything that burns fuel such as engines, generators, furnaces, gas stoves or water heaters, produce CO gas. Consequently, it is uncommon for household smoke from cigarettes or normal cooking to cause the alarm to sound.

**CAUTION: Activation of this device indicates the presence of carbon monoxide (CO), which can be fatal. A concentration of above 100 PPM will cause a warning condition. Individuals with medical problems may consider using detection devices with lower carbon monoxide alarming capabilities. Prolonged exposure to the horn at a close distance may be harmful to hearing.**

The CO detector is wired to both the house and chassis batteries, this allows a reliable and continuous protection by alerting the build up of potentially dangerous levels of CO. Once the unit is powered, it will run through a brief warm-up and self check prior to monitoring for CO gas. There are no switches that can accidentally be turned off. There is a simple test procedure that should be performed to ensure the CO detector is functioning properly.

**WARNING: If there is constant beeping and the red light is flashing, CO gas has been detected. Shut off appliances, coach engine, and water heater. Evacuate the coach and call the fire department. Have any problems corrected before restarting any appliances or the coach.**

## Operation

The detector is equipped with a self-cleaning CO sensor and requires a ten minute initial warm-up period to clean the sensor element and achieve stabilization. During the warm-up period, the **green** power light will flash **ON** and **OFF**. The **green** power light should be lit when the power is on. If the light is not lit, turn off the power and check all wire connections. If the power is on and the connections are correct, but the indicator still does not light, the detector should be returned for service. **Do not attempt to fix the detector.**

The indicator light displays a specific color to monitor along with a matching sound pattern:

**Indicator Lights and Sound Patterns:**

- **ON** or normal condition is indicated by **green**. The CO detector has power and is sensing air for the presence of CO gas. The alarm horn will not sound.
- Flashing **red** indicates low CO Alarm condition along with 4 beeps then **OFF** for 5 seconds. The alarm horn will sound and can be reset by the **TEST/RESET** button. The CO detector has detected the presence of 70 ppm.
- Steady Red indicates a **CO ALARM** condition. The detector has sensed the presence of levels over 100 ppm of carbon monoxide. The alarm horn will sound continuously until the **RESET** switch is reset.
- Alternating red and green indicates a malfunction alarm.

## Alarm

When the alarm sounds have the detector and the motorhome checked by an authorized service technician as soon as possible. Never disconnect a CO detector to silence an annoying alarm. Evacuate the motorhome immediately when the **red** light is lit and the alarm sounds. Do a head count to check that all persons are accounted for. Call the nearest fire department and ask them to determine the source of the carbon monoxide. Do not re-enter the motorhome until it has been aired out and the problem corrected.

**Potential Sources of CO when operating the motorhome:**

- Engine Exhaust
- Portable Space Heaters
- Gas Stoves and Ovens
- Defective Engine Exhaust System
- Other Motorhomes
- Portable Grills
- Camp Fires
- Generator Exhaust
- Portable Generators

## Testing

**Test Procedures:**

Test the carbon monoxide detector operation after the motorhome has been in storage, before each trip and at least once a week during use. Test the alarm by holding the **TEST/RESET** button in until the alarm sounds. The alarm will sound 4 beeps and the indicator lamp goes steady **red**. Six seconds later the alarm will again beep 4 times and the indicator light goes steady **green**.

**Peak Level Memory:**

The CO detector has the capability to remember the level of carbon monoxide that activated the alarm. Press the **TEST/RESET** button for less than one second and observe the visual and audible signals.

- One beep and a green flash indicate memory is clear.
- Two beeps and two red flashes indicate less than 100 ppm.
- Three beeps and three red flashes indicate less than 200 ppm.
- Four beeps and four red flashes indicate greater than 200 ppm.

**NOTE: Memory is erased when power is disconnected for 15 seconds.**

## Cleaning

Use a vacuum cleaner to remove dust or any other buildup on the detector. Do not wash. Wipe the detector with a damp cloth and dry with a towel. Do not open the detector for cleaning. Do not paint the detector. It is recommend that the carbon monoxide detector be replaced every 10 years.

## Troubleshooting

The CO detector has **NO** user service parts. If there is a problem with the detector refer to an authorized service center. **DO NOT REMOVE POWER**.

**NOTE: Check the CO detector weekly and at the beginning and end of each trip.**

## FIRE EXTINGUISHER

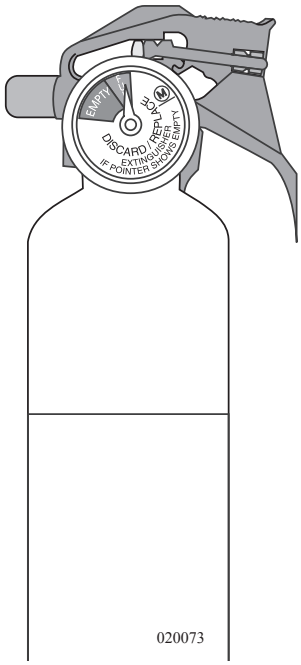


The fire extinguisher in the motorhome is located near the main entrance door. Please read the operating instructions that are printed on the fire extinguisher. If there is any doubt on how to operate the fire extinguisher, you and your family should practice using it. Be sure to replace or recharge the extinguisher immediately after use.

**Inspect** the fire extinguisher at least once a month. Do so more frequently if the extinguisher is exposed to weather or possible tampering. Do not test the extinguisher by partially discharging. Internal pressure will escape and the fire extinguisher will need to be replaced.

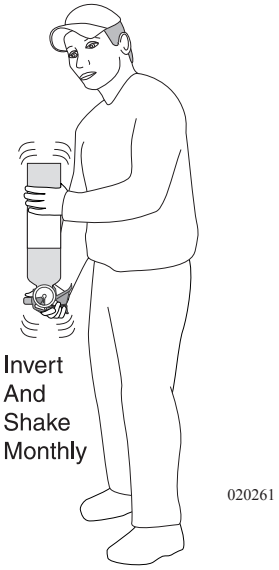


**Use the PASS word!**

**Pull** the pin to unlock the extinguisher.

**Aim** at the base (bottom) of the fire and stand 6-10 feet away.

**Squeeze** the lever to discharge the agent.

**Sweep** the spray from left to right until totally extinguished.

**WARNING: Road vibration may cause extinguisher powder to compact and may cause extinguisher malfunction. Invert and shake extinguisher monthly.**

## EGRESS EXIT WINDOW

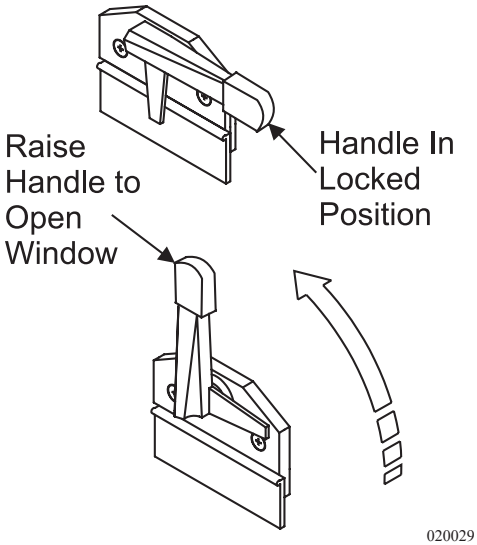


Egress Window Handle

An egress window is designated for use as an exit in the case of an emergency. Inside the motorhome the egress window is easily identified by the red locking handle. It is also marked as an "EXIT." The glass slider in the egress window operates the same as all other windows.

- To open the egress window, lift the red handle and push outward on the window.
- To close the egress window, pull the window closed and lower the handles to lock window in place.

**CAUTION: The egress window should be opened twice a year to ensure proper operation. Over time, the rubber seal will tend to stick to the egress window. Occasional operation will help prevent the rubber seal from sticking.**

## ~ NOTES ~

## ~ NOTES ~

# LaPalma - Exterior & Interior Care


**EXTERIOR CARE ..... 109**
- Corrosion ..... 109
- Washing ..... 109
- Drying ..... 110
- Waxing ..... 110
- Tire Care ..... 111
- Bright Metal ..... 111
- Care & Maintenance of Wheel Covers ..... 112

**EXTERIOR MAINTENANCE ..... 112**
- Roof Care & Seal Inspections ..... 113

**INTERIOR CARE - FABRICS ..... 115**
- Fabric Cleaning Codes ..... 115
- Fabric Specifications Charts ..... 117
- Vinyl ..... 119
- Leather ..... 121
- Ultra-Leather ..... 122

**FLOORS ..... 123**
- Carpet Cleaning ..... 123
- Tile Floors ..... 125
- Laminate Floors ..... 126

**SHOWER ..... 127**

**CEILING ..... 127**

**WALL COVERINGS ..... 128**

**WOOD CARE ..... 129**

**COUNTERTOP - SOLID SURFACE ..... 132**
- Countertops - Laminate ..... 133

**WINDOWS ..... 133**
- Condensation ..... 133

**WINDOW TREATMENTS ..... 134**
- Mini-Blinds ..... 134
- Day/Night Shades ..... 135

**MOLD & MILDEW ..... 136**

**PEST CONTROL ..... 138**

**GENERAL LUBRICATION MAINTENANCE ..... 142**
- Lubricants ..... 142
- Lubricant Classification ..... 142
- Proper Fluid Disposal ..... 143
- Greasing ..... 144

**STORAGE - SHORT TERM ..... 145**
- Long Term ..... 146
- Winter Storage - Checklist ..... 149
- Removal from Storage ..... 150

The most common cause of corrosion to the motorhome is the accumulation of road salts, grime and dirt. These elements, combined with moisture, may possibly cause early component failure. Salt air and fog from coastal trips can greatly accelerate the corrosion process. Corrosive materials collected from roadways accumulate on the undercarriage, around wheel openings and on the radiator charge air cooler package. These areas need to be cleaned periodically to help prevent component failure due to corrosion. If the motorhome is driven in areas where road salts are used it should be washed at least once a week. Otherwise, it is recommended to hose off the undercarriage area at least once a month to help minimize the corrosion process. High pressure washers or steam cleaners are the most effective way of cleaning off the underside and inside wheel openings. **Avoid directly spraying the painted surface with a high pressure washer.** Remove road debris and mud that has accumulated. Material left behind can intensify the corrosion problem.

**CAUTION: Exercise caution when cleaning the radiator charge air cooler package. Damage to the fins can result when using a high pressure washer or steam cleaner. Nozzle discharge pressure can exceed 1800 psi. Avoid using high pressure steam cleaners on the exterior paint surfaces. Remove all spattered washing debris from the exterior paint surfaces as soon as possible.**

## *Washing*

The life of the exterior paint finish can be extended if properly cared for. Periodic cleaning will help preserve the paint finish. The motorhome is painted with a “base coat, clear coat system.” The clear coat is a polyurethane based material which brings out the shine or luster to the base coat paint. Care should be used when washing the motorhome. Use only mild detergents or preferred specifically designed automotive detergents. Avoid using abrasive cleansers or laundry detergents as they will scratch the clear coat and leave a soap film. The use of specially designed automotive washing utensils, such as soft bristle brushes, are acceptable as long as they do not trap abrasive material and scratch the surface while being used. Before washing the motorhome remove most of the accumulated dirt and “road wash” behind wheel openings, below the windshield and on the rear of the motorhome. If the build up is excessive, run water over a soft brush while gently scrubbing the surface in one direction. This will help float away the “build-up” from the clear coat. Avoid back and forth or circular motions as this may act like sandpaper, scratching the clear coat and leaving a haze or “swirl marks.” After removing the heavy build-up, use the mixed detergent solution to wash the motorhome. Start washing at the top of the motorhome working towards the bottom. If possible, wash the motorhome in a shaded area when the exterior is not hot to the touch. If necessary, turn the motorhome around to keep the area being washed in the shade. Try not to allow the detergent to dry onto the clear coat surface. Use plenty of water when rinsing the surface to remove any detergent residue.

## Drying

Drying chamois cloths come in natural and synthetic materials. Either type is acceptable as long as the surface is clean. Soak the chamois in clean water until all chamois material has absorbed water. Wring excess water from chamois. Start at the top and work towards the bottom. Use a downward "S" pattern to remove water from the surface and wring out the chamois as needed. Using a chamois cloth to remove the rinse water is not necessary, but the effort can be worthwhile.

## Waxing

To wax or not to wax? This is a good question. There are many schools of thought on this issue. The two most common thoughts are:

- The clear coat needs to "breathe." A layer of wax will seal the clear coat not allowing it to breathe, possibly leading to failure of the clear coat.
- If the surface is not waxed, what is protecting the surface from the environment (road salts, acid rain, road tar, ultraviolet light)?

**It is recommended to wax the motorhome twice a year: spring and fall.** Many types of protective barriers are available today that may be applied to the clear coat: glazes, waxes, polishes, rubbing compounds or combinations of these products.

**INFORMATION: When selecting a product for use follow the product manufacturer's recommended application instructions.**

**Types of Products:**

**Glazes:** Glazes are generally used to fill very fine scratches in the clear coat, being applied either by hand or by using a polisher with a special pad.

**Waxes:** Waxes come in many types of chemical make-ups. The popular Carnauba wax is a natural occurring wax from the leaves or fronds of the Carnauba palm tree. Mineral waxes have a paraffin base. There are also other topical application products which contain silicone.

**Polishes:** Polishes usually contain a combination of wax based substances with an abrasive, getting the two for one idea. These products can be too abrasive for clear coats and are not recommended for use.

**Rubbing Compounds:** These types of products are generally applied by using a buffer. The use of rubbing compounds should be left to professionals as undesired results can quickly occur. These types of products are generally used to correct or flatten a surface by removing high spots or small amounts of material.

When selecting a product the container should be marked, “safe for clear coats” or “clear coat safe.” Carefully follow all manufacturer’s application instructions when using a product. Upon first use of a product, try it on a “small test spot” in an inconspicuous area in case an undesired reaction occurs.

Observe the test area from different angles checking for hazing or swirl marks. If an abnormal reaction to the finish occurs, discontinue product use and consult the product’s manufacturer. If the product is a paste, do not allow dried paste to be baked on by the sun. Remove paste shortly after drying. Clean, dry, 100% cotton cloths or cotton baby diapers are best suited for the removal of dried paste. Turn the cloth often. Use a separate clean cloth to buff. The surface should feel “slick” when rubbing the cloth lightly over it. Avoid repeated wax applications which can cause wax to build up. Some very fine scratches or swirl marks may be removed by an application of a glaze. These types of glazes fill the scratches or swirl marks.

The motorhome has a large surface area. Washing and waxing may not be completed in one afternoon. Select sections to wax until the motorhome is complete. If the task seems overwhelming, have an automotive detailer perform the task.

## Tire Care

Road oil will cause deterioration of the rubber. Dirt buildup will help hold chemicals in the air next to the tire and will also cause deterioration.

When cleaning any rubber product, proper care and methods in cleaning must be used to obtain the maximum service years out of the tires. Use a soft brush and a mild detergent to clean the tires. If a dressing product is used to “protect” the tires from aging, use extra care and caution. Tire dressings that contain petroleum products or alcohol may cause deterioration or cracking.

In many cases it is not the dressing that causes a problem but the chemical reaction that subsequently occurs. When these same dressing products are used on a passenger car tire that is replaced every three to four years, it is rare to see a major problem. However, in most cases recreational vehicle tires may last longer due to limited annual mileage and exposure.

## Bright Metal

All chrome, stainless steel and aluminum should be washed and cleaned each time the motorhome is washed. Use only automotive approved non-abrasive cleaners and polishes on exterior bright work. Do not use rubbing compounds. Do not use any abrasive cleaners or compounds to clean the mirrors.

**NOTE: When using chemicals to remove road tars, use only automotive type products that are recommended for use on painted surfaces and fiberglass. Observe the warning recommendations and directions printed on the container of any agent being used.**

## *Care & Maintenance of Wheel Covers*

Clean the wheel covers frequently with high pressure water from a hose using a mild detergent. Do not use harsh alkalis, alcohol or acidic cleansers. A secondary hand washing with a soft cloth may be required to remove stubborn road grime. To remove the wheel covers from the wheel for a thorough cleaning use the special tool that was included with the motorhome. Each wheel cover is secured by four lug covers identified by indent or notch markings. When the wheel covers are removed tires and rims can be cleaned and inspected.

Remove dirt, corrosion or any foreign material from the tire side of the rim using a wire brush. Do not use a wire brush or other abrasive substances to remove dirt and corrosion from the wheel covers. To maintain the original appearance of the wheel covers the following procedures are recommended:

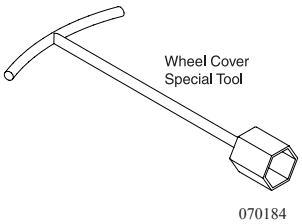


1. After installing new wheels (prior to operating the motorhome) use a sponge, cloth or soft fiber brush to wash the exposed wheel surfaces with a mild detergent/warm water solution.
2. Rinse thoroughly with clean water.
3. Wipe dry to avoid water spots.
4. Use a high quality, non-abrasive polish to remove stubborn road tars, insects or hard to remove deposits.
5. To protect the appearance surface on wheel covers, wax the cleaned surface with a high quality car wax.
6. Clean the wheel covers frequently to maintain their appearance.

## EXTERIOR MAINTENANCE

The motorhome is subject to a great deal of outside conditions. While the coach is parked it is exposed to extreme temperatures, humidity, ultraviolet rays, acid rain and other organic environmental conditions. While in operation the coach is subject to twisting and flexing caused by (for example) going in and out of driveways, bouncing through potholes and driving through winding mountain roads.

**Inspect** the fiberglass exterior. Periodic inspections may reveal minute cracks in the surface commonly called “spider cracks” or “hairline cracks” which are caused by the flexing of the fiberglass exterior. These are normal. If a crack represents a threat to the integrity of the fiberglass it will open up and the weave of the cloth would be visible. If the exterior has been damaged, prevent moisture penetration, especially in freezing climates. Cover the area as quickly as possible. Use plastic sheeting and tape, if necessary, so that moisture will not get into the motorhome and damage the interior.

Periodic resealing of the joints and seams is necessary to prevent the entrance of moisture into the motorhome. Enough emphasis cannot be placed on this issue. Extreme damage from a water leak can occur rapidly. Never leave the vehicle unattended with the slide room extended. If the vehicle is to be stored outside throughout the winter months, a full interior inspection for water leaks should be made bi-monthly.

Extensive sealing has been done at the factory; however, the normal twisting and flexing that occurs while traveling may have compromised a seal or seam.

**INSPECT: All joints and seams should be inspected at least twice a year and recalked as necessary.**

Special attention should be directed toward the roof air conditioning seals, ceiling and plumbing vents, skylights, roof mounted antennas, windows, door molding, clearance lights and the beltline molding.

Specific sealant products should be used in the areas for which they were designed. These items can be obtained from recreational vehicle parts suppliers. Listed below are some of the more common sealants and the areas in which they are used. Approved sealants are available at service centers and authorized dealers.

**WARNING: Some products may contain hazardous materials which require special handling. Read labels carefully. Follow all of the product manufacturer's safety requirements.**

**Sealant Types:**

**Acryl-R:**

Acryl-R is used on all roof openings such as vents, skylights, any roof mounted antennas and ladder roof mounts. The sealant should be applied only where the equipment bases meet the roof. Clean the old sealant that is lifting before applying the new. Make sure the roof is dry and free of dirt. This product is usually found in a caulking tube. Care should be used when near an edge, as the product will spread out. Masking tape may be used to mask around area to avoid mishaps. The roof air conditioners use a closed cell foam base gasket. Not sealants are required. The roof air conditioners should be checked for tightness by the four mounting bolts located in each interior corner of the air conditioner roof opening. Torque specification is 40-50 in/lbs. The base gasket should be compressed to approximately one half inch.

**Acrylic Sealants (geocel 2300):**

This product is used where items are sealed under a painted surface such as the metal corners of the slide-out room. The material is specially formulated to allow paint adhesion.

**Black Urethane:** Used for sealing the windshields, not to fill holes or other imperfections. Black urethane comes in a tube and it applies much the same way as silicone. Clean up using solvents such as paint thinner. Gloves are required as this material is hazardous.

**Silicone Sealant:** Primarily used on the sidewalls where a hole has been made and an item installed. This includes Windows, Doors, Handles, Beltline Molding, Latches and around bases of items surface mounted such as clearance lights. Old peeling sealant should be removed. Avoid using metal utensils which can scratch the painted surface. Use nylon sticks or equivalent. Avoid using lacquer thinners or ketone based solvents as these chemicals can damage the painted surfaces. Be sure the surface is clean and dry before application. Cut the tube at an angle with smallest usable opening. Avoid a heavy bead as a little goes a long way. Use finger at a 45° angle on beaded surface to smooth out product. Do not moisten finger, use a disposable latex glove. Keep rags or paper towels handy for clean up. Use care when applying silicone. Plan ahead before starting a bead, look for obstacles that may impede application.

**Spray Foam:** Used as a sealant where a hole has been made for items such as water lines or wires that are coming through a floor opening.

## INTERIOR CARE - FABRICS

Most fabrics have a designated cleaning code assigned to them. The cleaning code is determined, in most cases, by the content of the fabric. The code represents the cleaning agent and method that is approved by the fabric industry. If the fabric is abused, it can be damaged. Special care needs to be taken when the motorhome is exposed to a very humid climate for an extended period of time. Cover all upholstery and make sure window coverings are down to protect from sun damage.

Protect the fabric from any unnecessary exposure to moisture. Frequently used items will wear accordingly and may require more attention than those items not regularly used.

**Use the following guidelines for cleaning upholstery fabrics.**

- Water-based cleaners are not recommended.
- If a spill does occur, blot the soiled area. Do not rub it.
- Some solvents are not recommended since they may have an adverse reaction on a specific backing of the upholstery fabric.
- To prevent overall soiling, frequent vacuuming or light brushing are recommended to remove dust and grime.
- Clean spots using a mild water-free solvent or dry cleaning product.
- Clean only in a well ventilated area and avoid any product containing carbon tetrachloride or other toxic materials.
- Use a professional furniture cleaning service for overall cleaning.

### *Fabric Cleaning Codes*

The codes listed below refer to cleaning instructions recommended by the fabric manufacturing industry. Since most fabrics are hand-selected it is up to you to obtain the cleaning code for a particular fabric. If a spill occurs blot the moisture as quickly as possible. **Do not** use soap and hot water as this may set a stain. Obtain the cleaning code for the fabric as soon as possible.

**"W" -** Clean this fabric with the foam only of a water-based cleaning agent to remove the overall soil. Many household cleaning solvents are harmful to the color and life of a fabric. Cleaning only by a professional furniture cleaning service is recommended. To prevent overall soil, frequent vacuuming or light brushing to remove dust and grime is recommended.

**"S" -** Clean this fabric with pure solvents (petroleum distillate-based products such as Energine, Carbona, Renuzit, or similar products may be used) in a well ventilated room. Cleaning only by a professional furniture cleaning service is recommended.

**"S/W" -** Clean this fabric with the foam only of a water-based cleaning agent or with a pure solvent in a well ventilated room petroleum distillate-based products such as Energine, Carbona, Renuzit, or similar products may be used). Cleaning only by a professional furniture cleaning service is recommended. To help prevent overall soiling, frequent vacuuming or light brushing to remove dust and grime is suggested.

**CAUTION: Use of water-based or detergent-based solvent cleaners may cause excessive shrinking. Water stains may become permanent and unable to be removed with solvent cleaning agents. Avoid products containing Carbon Tetrachloride as it is highly toxic. To help prevent overall soiling, frequent vacuuming or light brushing to remove dust and grime is recommended.**

**"P"** - The article is resistant against perchlorethene, cleaning benzine (spirit), white spirit, R-11 and R-13.

**"Dry Clean Only"** - Cleaning only by a professional dry cleaner or furniture cleaning service is recommended for this fabric.

**"X"** - Vacuum only. A non-metallic brush may be used.

***Machine Washing for 100% Polyester:**

**"Wash Cycle"** - Use synthetic setting and high water level with mild agitation. A mild soap or detergent in water not to exceed 160º F. No bleach or fabric softener.

**"Drying"** - Use low temperatures, a synthetic setting of 85º F to 90º F maximum should be used. Do not exceed three to five minutes time on the synthetic cycle. If washed at 160º F, the maximum temperature which can be used to dry is 140º F. Hang or fold immediately after drying.

If necessary, press as follows:

- Iron on low setting (275° F) with damp cloth or steam iron using a dry press cloth.
- Grid Head press for short intervals with minimum steam. Do not lock the head.
- Flat bed press dampened drapery using cloth covering.
- Avoid prolonged contact with heat.

**Modern Movement .24a**

| APPLICATION | COLOR/PATTERN | CONTENT | CODE |
|---|---|---|---|
| Sofa, Living Room Lambrequin, Living Room Chairs | Fresco Onyx J017-6 | 37% Viscose 32% Cotton 31% Polyester | S |
| Living Room Lam, Free Standing Dinette, Living Room Pillow , Booth Dinette | Hoya Bronze | 100% Polyester | W |
| Bedspread, Bedroom Lambrequin | Sw ing Brass | 100% Cotton | S-Dry Clean |
| Bedroom Accent, Bedroom Lambrequin | Deco DE 25 Rye | 100% Cotton | S |
| Bedroom Pillow , Bedroom Lambrequin, Living Room Pillow | Cashion Stripe Onyx | 55% Cotton 45% Polyester | S |
| Bedroom Pillow , Bedroom Lambrequin, Living Room Pillow | Starlite Coal | 55% Cotton 45% Polyester | Dry Clean |
| Decorative Pillow Trim | 20062 COFF/DIJ/MOSS Fringe | 96% Chenille, 4% Polyester | Vacuum Only |
| Std. Cab Seats | Illusion Taupe | Vinyl | W/S |
| Opt. Cab Seats / Furniture | Ultraleather Taupe | 100% Polyurethane Blend w / 100% Rayon Backing | Ultraleather |
| Dash / Cut and Sew Vinyl | Tumblew eed Taupe | Vinyl | Vinyl |
| Windshield | Pearl 009 Natural | 100% Polyester | W/S |

**Blue Willow .731**

| APPLICATION | COLOR/PATTERN | CONTENT | CODE |
|---|---|---|---|
| Sofa, Living Room Lambrequin, Living Room Chair | Mont Blanc Blue Mist | 51% Cotton, 49% Polyester | S |
| Living Room Lambrequin, Living Room Pillow , Booth Dinette, Free Standing Dinette | Tate Pacific | 29% Cotton, 28% Polyester, 24% Acrylic, 19% Olefin | W |
| Bedspread, Bedroom Lambrequin, Headboard Trim | Caruso - Horizon / Cameo | 43% Polyester 57% Cotton | S |
| Bedspread, Bedroom Lambrequin, Headboard Trim | Autumn Grove Navy | 100% Cotton | S |
| Bedroom Lambrequin, Headboard, Bedroom Pillow | Bremen Bluebell | 54% Cotton 46% Polyester | S |
| Bedroom Lambrequin, Headboard, Bedroom Pillow | Row e Rivieria | 100% Polyester | Dry Clean |
| Cord Trim | Young at Heart Dresden | 63% Polyester 25% Rayon Chenille 12% Cotton Chenille | S |
| Std. Cab seats | Illusion New Oyster | Vinyl | W/S |
| Opt. Cab Seats / Furniture | Ultrafabric New Oyster | 100% Polyurethane Blend w / 100% Rayon Backing | Ultraleather |
| Dash / Cut and Sew Vinyl | Tumblew eed New Oyster | Vinyl | Vinyl |
| Windshield | Pearl 009 Natural | 100% Polyester | W/S |

**Prairie Grass .25a**

| APPLICATION | COLOR/PATTERN | CONTENT | CODE |
|---|---|---|---|
| Sofa, Living Room Lambrequin, Living Room Chair | Tap Room MO-37784-009 | 47% Polypropylene 31% Acrylic 21% Polyester 1% Nylon | S |
| Living Room Lambrequin, Living Room Pillow , Booth Dinette | Go Global MO-37521-003 | 37% Acrylic 37% Polyester 26% Cotton | S |
| Living Room Pillow , Living Room Accent, Free Standing Dinette | Winter Wonder MO-37522-003 | 37% Acrylic 37% Polyester 26% Cotton | S |
| Bedspread, Bedroom Lambrequin, Headboard Trim | Kauai Y86 Sequoia | 100% Cotton | S-Dry Clean |
| Bedroom Lambrequin, Headboard, Bedroom Pillow | Katsu DE 25 Wasabi | 100% Cotton | S |
| Decorative Pillow Trim | Oriental 1/2" Tir-Color Cord Lotus | 12% Polyester 74% Rayon 14% Olefin | S |
| Std. Cab Seats | Illusion Sand | Vinyl | W/S |
| Opt. Cab Seats / Furniture | Ultrafabric Sand | 100% Polyurethane Blend w / 100% Rayon Backing | Ultraleather |
| Dash / Cut and Sew Vinyl | Tumblew eed Sand | Vinyl | Vinyl |
| Windshield | Pearl 009 Natural | 100% Polyester | W/S |

**Romanesque .26a**

| APPLICATION | COLOR/PATTERN | CONTENT | CODE |
|---|---|---|---|
| Sofa, Living Room Lambrequin, Chair | Hew itt Putty | 67% Acrylic, 33% Polyester | W |
| Living Room Lambrequin, Booth Dinette, Living Room Pillow , Free Standing Dinette | M-6315 Pew ter | 55% Rayon, 45% Polyester | S |
| Living Room Pillow , Living Room Accent | Clarity Mist | 38% Acrylic, 32% Polyester, 27% Viscose, 3% Olefin | W |
| Bedspread, Bedroom Lambrequin, Headboard Trim | Diesel SD 94 Agave | 100% Cotton | S-Dry Clean |
| Bedroom Lambrequin, Headboard, Bedroom Pillow | Zaire Black | 100% Cotton | P |
| Decorative Pillow Trim | Heirloom FRL Verde Loop Fringe #766 | 42% Polypropylene 58% Polyester | P |
| Std. Cab Seats | Illusion New Oyster | Vinyl | W/S |
| Opt. Cab Seats / Furniture | Ultrafabric New Oyster | 100% Polyurethane Blend w / 100% Rayon Backing | Ultraleather |
| Dash / Cut and Sew Vinyl | Tumblew eed New Oyster | Vinyl | Vinyl |
| Windshield | Pearl 009 Natural | 100% Polyester | W/S |

Several areas of the motorhome such as the dash, ceiling and items of furniture may be covered in vinyl. The care and cleaning of these areas are outlined in the Morbern Vinyl section below.

**Morbern Vinyl:**
Vinyl requires periodic cleaning to maintain its neat appearance and to prevent the buildup of dirt and contaminants that may permanently stain and/or reduce the life of the vinyl if not removed. The frequency of cleaning depends upon the amount of use and the environmental conditions in which the vinyl is subjected. The procedures used for cleaning are dependent upon the end-use circumstances.

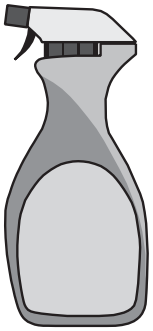
cleaner

**Normal Cleaning:**
Most common stains can be cleaned using warm soapy water and clear water rinse. Moderate scrubbing with a medium bristle brush will help to loosen soil from the depression of embossed surfaces. For stubborn stains use the following commercially available mild detergents in accordance with the manufacturer's instructions: Mr. Clean or Fantastik. Full strength rubbing alcohol or mineral spirits may be tried cautiously as a last resort on very stubborn stains if the above suggestions do not work. Indiscriminate use of any solvent, or solvent containing cleaner, can severely damage or discolor the vinyl. Stains may become permanent if they are not removed immediately. The procedure for removal of the more severe staining agents are outlined below.

**NOTE: Detergents should never be used on a regular or repeated basis for normal cleaning.**

**CAUTION: Powdered cleaners containing abrasives, steel wool and industrial strength cleaners are not recommended for Morbern vinyl.**

**Bird Excreta & Vomit Stains:**
Sponge the area with soapy water containing a diluted bleach until the stain is removed. Rinse thoroughly with clean water.

**Urine Stains:**
Sponge with soapy water containing a small amount of household ammonia. Rinse thoroughly with clean water.

**Surface Mildew:**
Wash with diluted bleach and use a soft brush for stubborn growth. Rinse repeatedly with clear, cold water.

**Ballpoint Ink:**
Permanent Marker Ink spots will stain the vinyl permanently. Wipe the stain immediately with rubbing alcohol in a well ventilated area to remove much of the stain.

**Oil-Base Paint:**
Use turpentine in a well ventilated area to remove any fresh paint. Dried paint must be moistened using a semi-solid, gel-type stripper. The softened paint can be gently scraped away. Rinse with soap and water.

**CAUTION: Lacquer solvent will cause immediate irreparable damage to the vinyl. Do not use wax on any vinyl upholstery as it will cause premature embrittlement and cracking. Dilute chlorine bleach before using. Never use full strength bleach.**

**CAUTION: Paint strippers will remove the print pattern and damage the vinyl if it comes in direct contact.**

**WARNING: If flammable solvents such as alcohol, turpentine or varsol are used for cleaning, use only small quantities while in a well-ventilated area. Exercise proper caution by notifying any persons in the area. Keep away from any ignition source. Always wear protective gloves.**

**Latex Paint:**
Fresh paint can be wiped off with a damp cloth. Hot soapy water will normally remove dried latex.

**Tar or Asphalt:**
Remove immediately. Prolonged contact will result in a permanent stain. Use a cloth lightly dampened with mineral spirits and rub the stain gently, working from the outer edge of the stain toward the center to prevent spreading. Rinse with soap and water.

**Crayon, Mustard or Ketchup:**
Sponge with mild soap and water. For stubborn stains that may have set, use a cloth soaked in diluted mild detergent with gentle rubbing. Any remaining stain should be washed with diluted bleach. Rinse repeatedly with cold water.

**Chewing Gum:**
Scrape off as much gum as possible using a dull knife. Rub the gum with an ice cube to harden and make it easier to remove. In a well ventilated area, use a cloth saturated with mineral spirits and gently rub the remaining gum. Rinse thoroughly with clean water.

**Lipstick, Grease, Oil, Make-Up or Shoe Polish:**
Apply a small amount of mineral spirits with a cloth. Rub gently. Be careful not to spread the stain by smearing it beyond its original source. Remove shoe polish immediately as it contains a dye which will cause permanent staining. Rinse thoroughly with clean water.

**Candy, Ice Cream, Coffee, Tea, Fruit Stains, Liquor, Wine, Tanning Lotion or Soft Drinks:**
Use lukewarm water and sponge repeatedly. Any loose material should be gently scraped with a dull knife. Any soiled area that remains after drying should be gently rubbed with a cloth, dampened with a mild detergent solution. Rinse thoroughly with clean water.

**Blood or Plant Residue:**
Rub out any spots with a clean cloth soaked in cool water. If stubborn spots remain use household ammonia and rinse repeatedly with a clean, wet cloth. Do not use hot water or soap suds as this will set the stain.

**TIP: Vinyl requires periodic cleaning to maintain its appearance and to prevent the buildup of dirt and contaminants that may permanently stain or reduce the life of the vinyl if left untreated. Frequency of cleaning and procedures used depend upon the amount of use and the environmental conditions in which the vinyl is subjected. Tears or holes in the vinyl can be temporarily covered with clear "office" tape to prevent further damage. Repairs should be made by a professional upholstery shop. Commercial repair products may contain lacquers and cause the vinyl to become brittle and more difficult to repair.**

## *Leather*

**Spots & Spills:**
Absorb excess liquid immediately with a clean cloth or sponge. Use water only if necessary. Do not use a cleaning product. If water is used, clean the entire area where the spot occurred. An example would be the entire seat cushion or the entire arm. Allow to air dry. Do not dry the wet areas with hair dryers, etc.

**Stubborn Spots and Stains:**
Use lukewarm water and a mild soap to work up a thin layer of suds on a piece of cheesecloth. Scrub the surface. Rinse with a piece of clean, damp cheesecloth. Allow to air dry. Do not use saddle soap, cleaning solvents, furniture polish, oils, varnish, abrasive cleaners, soaps or ammonia water.

**NOTE: These are recommended or suggested methods of cleaning. The manufacturer is not responsible for damage incurred while cleaning. Always test the cleaning method in an inconspicuous area first before applying to the entire area.**

**Care Instructions:**

- Spot clean with mild soap and water.
- Air dry or dry quickly with warm setting of a hair dryer.
- For stubborn stains, use mild solvent.
- For tougher stains, try *Fantastik*® brand spray cleaner.
- Disinfect with a **5:1 NON-CHLORINATED** (only) bleach solution.
- Dry clean using commercial dry cleaning solvents only.
- Use a mild detergent for:
  - Red Wine, Liquor - Coffee, Tea, Cola - Milk
  - Ketchup, Mustard, Mayonnaise - Steak Sauce, Soy Sauce
  - Butter, Salad Oil - Chocolate - Lipstick, Make-up, Face Cream
  - Suntan Oil - Machine Oil - Urine, Blood

**Removing ballpoint pen stains:**

Wipe the stain off with ethanol (ethyl alcohol). If the stain cannot be removed with ethanol, use the following procedure. Proceed with caution when using toxic chemical.

1. Prepare bleach. Dilute household bleach (sodium hypochloride) with the same amount of water.
2. Place a piece of tissue and apply the solution prepared by step 1 (do not apply too much). Cover it with polyethylene film to prevent the solution from drying.
3. Remove the tissues occasionally to check on the condition of the stain. When the stain is almost gone, remove the tissues completely. Do not leave on for more than one hour.
4. Wash the stain with sufficient amount of water.

**If there is residue of bleach, polyurethane resin and back cloth will deteriorate. Neutralize it by the following method:**

- Place a piece of tissue, as in step 2, and apply hydrogen peroxide solution (15%).
- Leave the solution on for approximately 30 minutes, then remove the tissue.
- Completely remove the residue of hydrogen peroxide on the Ultra-leather with water.

Sodium hypochloride is the only chemical that will remove ballpoint pen stains. However, this chemical may cause polyurethane to yellow or the back cloth to deteriorate. It is recommended to remove ballpoint pen stains as early as possible with ethanol.

**For more information, please call: Ultrafabrics, LLC**
**Customer Service: 1-877-309-6648**

## FLOORS - *Carpet Cleaning*

**Spot Removal Procedures:**

- Act quickly when anything is dropped or spilled. Remove spots before they dry.
- Blot liquids with a clean, white absorbent cloth or paper towel.
- For semi-solids, scoop up with a rounded spoon.
- For solids, break up and vacuum out as much as possible.
- Pretest the spot removal agent in an inconspicuous area to make certain it will not damage the carpet dyes.
- Apply a small amount of the cleaning solution recommended for the particular spot. Do not scrub. Work from the edges of the spot to the center. Blot thoroughly. Repeat until spot is removed.
- Follow steps on the Carpet Spot Removal Guide.
- After each application, absorb as much as possible before proceeding to the next step.
- Absorb remaining moisture with layers of white paper towels, weighted down with a non-staining glass or ceramic object.
- When completely dry, vacuum or brush the pile to restore texture.
- If the spot is not completely removed, contact a professional carpet cleaner.

| | A | B | C | D | E | F | G | H | I |
|---|---|---|---|---|---|---|---|---|---|
| **Use the solution specified in order from 1-8 until stain is removed.** | DRY CLEANING FLUID | NAIL POLISH REMOVER | DETERGENT SOLUTION | WARM WATER | VINEGAR SOLUTION | AMMONIA SOLUTION | SPOT REMOVAL KIT | CALL PROFESSIONAL | PERMANENT CHANGE |
| **SPOTS** | | | | | | | | | |
| Acid | | | | 2 | | 1 | | 3 | * |
| Acne Medication | | 1 | | 2 | 5 | 4 | 3 | 6 | * |
| Alcoholic Beverage | | | 1 | 4 | 3 | 2 | | | * |
| Ammonia | | | | 2 | 1 | | | | * |
| Bleach | | 1 | 2 | | | | | 3 | * |
| Blood | | 1 | 3 | | 2 | 4 | | | |
| Candle Wax | 1 | | | | | 2 | | | |
| Cement & Glue | 2 | 1 | 3 | | 5 | 4 | 6 | | * |
| Chalk | | 1 | 2 | | | | | | |
| Charcoal | | 1 | 2 | | | | | | |
| Chewing Gum | 1 | | | | | | | | |
| Coffee | | | 1 | 3 | 2 | | 4 | 5 | * |
| Cosmetics | | 2 | 1 | 3 | 6 | 5 | 4 | 7 | * |
| Crayon | 1 | | 2 | 3 | | | | | |
| Drain/Toilet Cleaner | | | 2 | 1 | 3 | | | 4 | * |
| Dye | 1 | | 2 | | 4 | 3 | 5 | 6 | * |
| Food | | | 1 | 4 | 3 | 2 | 5 | 6 | * |
| Fungicides, Insecticides, Pesticides | 1 | | 2 | 5 | 4 | 3 | 6 | * | |
| Furniture Polish (Water Based) | | | 1 | 4 | 3 | 2 | 5 | 6 | * |
| Furniture Polish (Solvent Based) | 2 | 1 | 3 | 6 | 5 | 4 | 7 | 8 | * |
| Furniture Stain | 2 | 1 | 3 | 6 | 5 | 4 | 7 | 8 | * |
| Graphite | | 1 | 2 | | | | | | |
| Grease | 1 | 2 | 3 | | | | 4 | 5 | * |
| Ink | 2 | 1 | 3 | 6 | 5 | 4 | 7 | 8 | * |
| Iodine | 1 | | 2 | 5 | 4 | 3 | 6 | 7 | * |
| Lipstick | 2 | 1 | 3 | 6 | 5 | 4 | 7 | 8 | * |
| Medicine | 2 | 1 | 3 | 6 | 5 | 4 | 7 | 8 | * |
| Merthiolate | | | 1 | 4 | 3 | 2 | 5 | 6 | * |
| Nail Polish | 2 | 1 | 3 | | | | 4 | 5 | * |
| Oil | 1 | | 2 | 4 | | 3 | | 5 | * |
| Paint | 2 | 1 | 3 | | | | 4 | 5 | * |
| Plant Food | | | 1 | 4 | 3 | 2 | 5 | 6 | * |
| Rust | | | 2 | 3 | 1 | | 4 | 5 | * |
| Shoe Polish | 2 | 1 | 3 | 5 | | 4 | 6 | 7 | * |
| Soft Drinks | | | 1 | 4 | 3 | 2 | 5 | 6 | * |
| Soot | 1 | | 2 | 3 | | | | 4 | * |
| Tar | 1 | | | | | | 2 | 3 | * |
| Toothpaste | | | 1 | | | | | | |
| Urine | | | 1 | | 2 | | 3 | 4 | * |
| Vomit | | | 1 | 4 | 3 | 2 | 5 | 6 | * |

* While recommended cleaning agents are effective, some stains may become permanent.

**Cleaning Solutions:**

A. **Dry Cleaning Fluid**: A nonflammable spot removal liquid, available in grocery and hardware stores.

B. **Nail Polish Remover:** Any acetate, which often has a banana fragrance. Do not use if it contains acetone.

C. **Detergent Solution:** Mix two cups of cold water and 1/8 teaspoon mild liquid detergent (no lanolin, non-bleach).

D. **Warm Water:** Lukewarm tap water.

E. **Vinegar Solution:** One cup white vinegar to one cup water.

F. **Ammonia Solution:** One tablespoon household ammonia to one cup water.

G. **Kit - Spot Removal:** Available from retail carpet stores or professional cleaners.

H. **Call Professional:** Additional suggestions, special cleaning chemicals or the ability to patch the area might be available.

I. **Permanent Change:** Due to the nature of the stain, there may be color loss. The carpet has been permanently dyed or the carpet yarns have been permanently damaged.

**NOTE: While the recommended cleaning agents have proven to be effective, some stains may become permanent.**

Tile floors vary in porosity and surface irregularities. This can make it difficult to protect and maintain. Regular maintenance is important to keep the tile in the motorhome looking showroom new. Once the slide-out has been extended, keep the tile floor clean to prevent dirt from scratching the tiles prior to retracting the slide-out.

**NOTE: Tile is ceramic and will chip and break easily. Avoid dropping heavy or sharp objects on the tile.**

**Cleaning Tile:**

Use a damp sponge mop or a cloth to clean tile and maintain its luster. If moderate staining occurs, cleaning with a window cleaner such as Windex should do the job. A mild solution of hot water and all-purpose cleaner for tile floors, walls and countertops can also be used. Rinse well with clear water and dry with a soft cloth to prevent streaking. Avoid cleaning tile with soap. Soap forms a film to dull the luster. Soap also promotes the growth of mildew and bacteria. Do not use powdered cleaners on unglazed tile floors. Undissolved powder will dull the surface. Grout sealers are available that protect the porous surfaces. If a sealer is used, follow the sealant manufacturer guideline for application. Never use sealers on unglazed tile. With the exception of terra cotta, which may be oiled or waxed, tile does not need to be polished or buffed maintain its finish.

**Grout:**

The grout used is a two part concrete mix. It is normal for this type of grout to develop surface cracks over time. In motorhome application, due to the constant flexing of the flooring, this process may accelerate. If the grout requires cleaning, scrub with a plastic brush. Do not use steel wool as small particles may remain and produce unsightly stains.

**NOTE: Before using any solution to clean the tile, check the manufacturer's warning label to ensure the safety of the product. If there is any doubt, apply several test patches of the solution in an inconspicuous place to determine the product's suitability.**

## Laminate Floors

Laminate flooring used in the motorhome provides style, durability and ease of maintenance. This high-pressure laminated flooring is designed to be incorporated as a floating floor.

Laminate flooring is constructed of three main material components. The surface, similar to many countertops, contains aluminum oxide particles to form an extremely hard, durable outer layer. The carrier, or core layer, is constructed from high density fiberboard. A tongue and groove design provides a tighter bond. The backer or bottom layer is also made of laminate for strength.

**Cleaning and Maintenance:**

For everyday cleaning, vacuum the floor to remove dirt and debris. It is recommended to occasionally mop the floor using a cotton string mop and a minimal amount of water. Use a mixture of soap-free household cleaner (either vinegar or ammonia work well) and water for a more thorough cleaning.

- Wipe away stains with a damp cloth.
- Stains caused by inks or paints may require a cloth moistened with acetone (nail polish remover).
- Stains caused by gum or tar should be allowed to harden completely, then gently scraped away.
- Felt protectors on the bottom of furniture and floor mats can preserve the beauty and appearance of the flooring.

**CAUTION: Abrasive cleaners and scouring pads can scratch and damage the flooring. Never wax, sand or apply lacquer to laminate flooring.**

**NOTE: Any unusual or unique problems concerning the laminate flooring can be addressed by contacting Wilsonart at (800) 433-3222.**

## SHOWER

Showers are susceptible to soap build up. Showers should be cleaned weekly to prevent burdensome clean-up. Using the same solution used to clean tile floors will be sufficient for the shower. However, to control mildew growth spray the shower with household chlorine bleach and allow it to stand for five minutes. Clean the glass shower doors with window cleaner on a weekly basis to maintain the shine. If water spots cannot be removed from the glass, rub lightly with the flat edge of a razor blade to remove deposits.

To prevent excessive moisture and a continual growth of mildew, use the shower only with adequate ventilation. The sealant in a regularly used shower should be replaced once a year. To replace sealant, remove the old sealant using a sharp non-metallic instrument. Apply a new sealant, which can be found at most recreational vehicle supply stores.

## CEILING

The ceiling of the motorhome can be a variety of materials or fabrics, many of which require little or no care or maintenance.

**Vinyl:**

The soft touch padded vinyl ceiling can be cleaned using the procedures discussed in the vinyl article of this section. Generally, a mild soap and water is sufficient for cleaning vinyl.

**NOTE: Use care not to puncture the padded vinyl.**

**Hardwood Vinyl and Decorated Paneling:**

Hardwood vinyl and decorated paneling are sensitive and demanding materials. Certain cleaning agents will affect the surface on both printed and unprinted vinyl. Use only a mild, non-abrasive detergent and warm water with a soft cloth or sponge for cleaning to protect the material.

Under no circumstance should bleach, alcohol, oil-based spray cleaners or cleaning agents with solvents, citrus oil or harsh chemicals be used. Other liquid spray cleaners may also cause damage to the material.

## WALL COVERINGS

Time is very important when removing substance from wall coverings that are solvent based or contain color. Do not use abrasive cleaners containing chlorine bleach or solvents. *Fidelity* and *Jolie* brands are recommended. Always begin with a mild detergent or soap and warm water. To remove normal dirt clean with a soft sponge. Rinse and wipe dry.

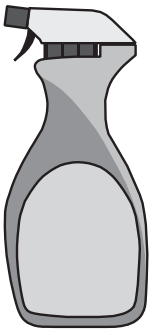

cleaner

**Care for the Tower Wall Covering:**

Remove ordinary stains with mild soap and warm water. Sponge on. Rinse well and dry with a soft cloth. **For special cleaning problems:** To remove ball point pen, blood, lipstick, etc., use a sponge or soft bristle brush and *Formula 409*, *Fantastik* or a similar product. Rinse well and dry. Finish cleaning by applying full strength isopropyl alcohol with a sponge or soft brush. Rinse well and dry.

**Care for the Satinesque Wall Covering:**

Stains should be removed as quickly as possible to minimize reaction between the staining agent and wall covering. Time is very important when removing substances that are solvent based or contain color. Examples: nail polish, oil, shampoo, lacquer, enamel, paint, ink and lipstick.

Always begin cleaning with a mild detergent such as soap. If necessary, move to a stronger cleaner such as household bleach, liquid household cleaners or rubbing alcohol. Before using one of the stronger cleaners, test the cleaning agent on a small inconspicuous portion of the wallcovering to make sure that the cleaner does not affect the color or gloss of the wall covering.

**Stain Removal Procedures for Specific Stain Types:**

**Normal Dirt:**

Remove normal dirt using a mild soap or detergent and warm water. Allow it to soak for a few minutes then rub briskly with a cloth or sponge.

**Nail Polish, Shellac or Lacquer:**

Remove liquid using a dry cloth. Use care not to spread the stain. Quickly clean the remaining stain with rubbing alcohol. Rinse with clean water.

**Ink:**

Remove immediately by wiping with a cloth dampened in rubbing alcohol. Rinse with clean water.

**Chewing Gum:**

Rub with an ice cube to cool and harden. Gently pull off the bulk of the gum. Remove any remaining gum with rubbing alcohol.

**Pencil:**
Erase as much of the pencil mark as possible. Wipe any remaining marks with rubbing alcohol.

**Blood, Feces or Urine:**
Remove these staining substances as quickly as possible. Wash the stained area with a strong soap. If the stain does not disappear, rinse the soapy area thoroughly with clean water. Mix a solution of 50% water and 50% household bleach. Clean the stained area with the bleach solution. Rinse with clean water.

## WOOD CARE

Wood should be treated the same as a piece of fine furniture. Care and cleaning of the wood surface is essential in maintaining the natural beauty of wood. Keep in mind that wood finishes can vary widely. Test a new cleaning solution in an inconspicuous area to check for possible damage.

The care and cleaning of the solid wood surfaces and the wood products used in the motorhome depends on individual choices and preferences. Numerous waxes, polishes and finishing products are available for use. Always follow the manufacture label and instructions. The solid wood surfaces should be cleaned weekly. Dust regularly with a soft, lint-free cloth. Dampen the cloth slightly with water. Wipe one small area at a time and dry immediately.

For stubborn stains, use a clean cloth dampened with a solution of mild, non-alkaline soap (like dishwashing liquid) and water. Dry thoroughly using a soft cloth. Buff lightly, following the direction of the grain. Never use abrasive cleaners, scouring pads or powdered cleansers.

Excessive dampness, dryness, heat, or cold can damage solid wood finishes. Sunlight can change the color or age the wood. Never allow moisture or spills to stand, always blot dry immediately. Solvents, alcohol, nail polish and polish removers, as well as harsh cleaners should not be used on finished wood surfaces.

Minor damage to solid wood surfaces can be repaired quickly and effectively with a bit of hard work, some careful attention to details, and most importantly, the right materials. However, any wood repair or finishing job is best left for a professionally trained individual.

**NOTE: It is important to inform the service technician of any products used for the care and cleaning in the event of wood repairs.**

**Sanding and Sandpaper:**

The following table is a general guide to the proper uses, although this may vary from wood type to type.The key to sanding is using the right sandpaper for the repair that is needed. Always sand with the grain.

| GRIT | Common | Common |
|---|---|---|
| 80-120 | Medium | Smoothing the surface, removing small marks. |
| 150-180 | Fine | Final sanding prior to finishing. |
| 220-240 | Very Fine | Sanding between coats of sealing. |
| 280-320 | Extra Fine | Removing dust spots or mark between finish coats. |
| 360-600 | Super Fine | Fine sand of the finish to remove luster or surface blemishes. |

**Steel Wool:**

Abrasive material composed of long steel fibers of varying degrees of fineness that are matted together. The coarser grades are used to remove paint and other finishes; the finer grades for polishing or smoothing a finished surface.

**Nail Holes and Small Cracks:**

Fill nail holes and small cracks with wood putty or dough for unstained woods prior to any sanding. Stained finishes require filling holes and cracks after the stain has been applied. Putty should match the stain closely in color.

**NOTE: A little sawdust and wood glue can be used to make putty for end grains.**

**Fixing scratches in stained woodwork:**

"Quick and simple" rarely describes repairs to stained wood finishes. However, a few tricks can be tried. When scratches appear lighter than the surrounding dark-stained woodwork, it usually means either that the scratch goes through the stain into the wood or that the varnish is flaking off.

**Dents:**

Dents are the results of wood fibers being crushed and compressed. Dents can be raised back to original level by steam. To raise a dent, place a damp cloth over the dent and hold a medium-hot iron on it. The steam will cause the wood fibers to swell back into place. It may be necessary to repeat this process until the dented area is level with the surface. Allow the area to dry.

**Restoring the clear finish:**

Check the scratches carefully. If flaking varnish is visible with dark-stained wood underneath, only the clear finish may need to be restored. Rub the loose varnish with fine steel wool or fine synthetic steel wool until you have removed the flaking varnish and slightly roughened a small area of the finish surrounding the scratch. With the tip of rag, a small brush, or even a cotton swab, apply a thin coat of a wipe-on finish. Apply finish to the damaged area only. Several coats may be needed to hide the scratch.

**Re-staining the wood:**

If bare wood is visible at the bottom of the scratch, the wood will need to be re-stained. To remove damaged varnish, lightly roughen a small area around the scratch with sandpaper, steel wool or synthetic steel wool. Find a stain that is a shade lighter than the wood finish. Stain the bare wood with a very small amount of stain on a rag, brush or cotton swab. If the color is too light, apply several coats. Rub away excess stain with a dry rag. If the wood becomes too dark, use a rag moistened in mineral sprits to lighten the wood. Select a lighter color stain and continue.

Several companies have simplified this repair process by putting oil-based wood stain into marker-like containers. Just rub the stain marker on the scratch. Start with a stain color that is lighter than the original finish, because torn and scratched wood fibers will absorb stain and darken quickly. A second coat can always be applied if the color of the first coat is too light. Once the color is blended, patch the clear finish as described above and apply a wipe-on finish.

**Scratches and Nicks:**

Several professional woodworkers use similar procedures and tricks when it comes to scratches and nicks, most of which can be easily repaired. Always test an inconspicuous area of the wood prior to repairs to ensure no damages to the finish.

Light scratches will often disappear when carefully rubbed with furniture polish or paste wax. Deeper scratches can be hidden by carefully rubbing with a piece of oily nutmeat such as Brazil nut, black walnut or pecan. Be careful to rub the nutmeat directly into the scratch to avoid darkening of the surrounding wood. Color the scratch with brown coloring crayon or liquid shoe dye (especially good on walnut).

Staining the scratch with iodine:
Mahogany - Use new iodine.
Brown or Cherry Mahogany - Use iodine that has turned dark brown.
Maple -Dilute one part iodine with one part denatured alcohol.

Commercial scratch removers, or stick wax to match the wood finish, can also be used. After the scratch has been hidden, polish or wax the entire area. Deep scratches should be repaired and finished by a professional.

## COUNTERTOP - SOLID SURFACE

The Solid Surface was created for a lifetime of easy care. Just follow the simple guidelines listed here to the keep countertop surface looking nice.

**Routine Care:**

The motorhome countertops are finished with one type of finish: matte/satin. All solid surface sinks and bowls have a matte/satin finish. Soapy water or ammonia-based cleaners will remove most dirt and stains from all tops and bowls. However, slightly different techniques must be used to remove different stains. Follow the recommendations below.

**Cleaning the Countertops:**

- Most dirt and stains: Use soapy water or ammonia-based cleaner.
- Water marks: Wipe with damp cloth and towel dry.
- Difficult stains: Use soft scrub and a Grey *Scotchbrite* Pad.
- Disinfecting: Occasionally wipe surface with diluted household bleach (one part water and one part bleach).

**Cleaning the Solid Surfaces Sink:**

Occasionally clean by using *Soft Scrub Liquid Cleanser* and a Grey *Scotchbrite* pad. Scrub the sink, rinse and towel dry. Do this as often as necessary.

**Removing Cuts and Scratches:**

Because the beauty of the surface goes all the way through the Solid Surface, countertops are completely renewable. Use the following instructions to remove minor cuts and scratches.

- Sand with 180 grit and then 320 grit sandpaper until the scratch is gone.
- Restore the finish using a Grey *Scotchbrite* pad. Never sand hard in one small area. Feather out lightly to blend restoration.

**Preventing Heat Damage:**

The Solid Surface withstands heat better than ordinary surface materials; however, hot pans and some heat-generating appliances, such as frying pans or crockpots, can damage the surface. To prevent heat damage always use a hot pad or a trivet with rubber feet to protect the surface. In most cases the surface can be repaired if it is accidentally damaged.

**Other Important Tips:**

Avoid using strong chemicals on the Solid Surface such as paint removers or oven cleaners. If these chemicals come in contact with the Solid Surface, quickly wash with water. Avoid contact with nail polish or nail polish remover. If contact is made, quickly wash with water.

**NOTE: Do not cut directly on the solid surface. Always run cold water into the Solid Surface sink when pouring boiling water into the sink.**

## Countertops - Laminate

Clean laminate countertops with a damp cloth or sponge. Use a spray cleaner to remove stubborn stains. Avoid using harsh abrasives, scouring powders, peroxides or bleaches as these products may dull or damage the surface. Avoid contact with dyes, bleaches and indelible inks used on food packages. Do not use laminated countertops as a cutting board. Laminated countertops are resistant to minor heat; however, hot pans, irons and lighted cigarettes will damage the surface. Use hot pads under pans taken directly from the stovetop.

## WINDOWS

**Water Spots:**

Any glass will develop water spots if not cleaned properly. A spotting effect is magnified when the glass has a reflective finish. Use a squeegee immediately after washing to reduce water spotting. To remove stubborn water stains from reflective glass we recommend *Cerium Oxide Polishing Compound*, made by C.R. Lawrence, available at most glass shops.

## Condensation

Condensation is a natural phenomenon. The amount of condensation will vary with climate conditions, particularly in relative humidity. Condensation occurs from water vapor present in the air. Each of us add more vapors by breathing, bathing, cooking, etc. Water vapor collects wherever there is available air space. When the temperature reaches the dew point the water vapor in the air condenses and changes to liquid form.

**Controlling Moisture Condensation:**

Reduce or eliminate interior moisture condensation during cold weather by using the following steps:

- Partially open the roof vents and windows so that outside air can circulate into the interior. Increase the ventilation when large numbers of people are in the motorhome. Even in raining or snowing conditions the air outside will be far drier than the interior air.
- Install a dehumidifier. Continuous use of a dehumidifier is effective in removing excess moisture from the interior air. Using a dehumidifier is not a cure-all, however, it will reduce the amount of outside air needed for ventilation.
- Run the range vent fan when cooking and the bath vent fan (or open the bath vent) when bathing, to reduce water vapor. Avoid excessive boiling or use of hot water as it produces steam.

- Do not heat the motorhome interior with the range or oven. Heating with the range or oven increases the risk of toxic fumes and allows oxygen depletion. Also, open flames add moisture to the interior air increasing condensation.
- In very cold weather leave the cabinet and closet doors partially open. The air flow will warm and ventilate the interior of the storage compartments and the exterior wall surface, reducing or eliminating condensation and preventing the possibility of ice formations.

## WINDOW TREATMENTS *- Mini Blinds*

- **Dusting:**
  Regular dusting maintains the appearance of most blinds. Keep the aluminum blind looking its best by periodically wiping them with a soft cloth or a dusting mitt. By tilting the slats down, but not quite closed, you'll be able to clean most of the top surface of each slat. Blinds may be cleaned while hanging in place using this method.

- **Vacuuming:**
  For deeper cleaning, vacuum gently with brush attachment of any vacuum cleaner.

- **Compressed Air or Hair Dryer (non-heat setting):**
  Blow dust off each slat. Dust will be air-borne using this method so ventilate the motorhome.

- **Spot-Cleaning:**
  Spot-clean shades and blinds using a soft cloth or a moistened sponge with lukewarm water. Add mild detergent, if needed. Blot gently to avoid creasing. In a dusty environment, the blinds may need to be cleaned regularly using a sponge or dampened soft cloth. Use warm (not hot) water and a mild detergent. The mild detergent cannot contain abrasives. Rinse the blinds using a clean cloth and water to prevent water spots. Place a towel directly under the blinds to absorb any water that might drip down.

- **Ultrasonic cleaning:**
  Professional ultrasonic cleaning may be preferred.

• **Tub cleaning:**

1. Immerse entire shade assembly in lukewarm water with mild detergent. Wash for several minutes by gently moving liquid around with your fingers.
2. Rinse with clear water.
3. Close shade before removing from rinse water.
4. Hold rails and tilt the shade to allow excess water to drain off.
5. Re-install damp shade into window opening. Place a towel directly under the blinds to absorb any water that might drip down.
6. Lower shade all the way to allow it to dry completely.

## *Day/Night Shades*

The day/night shades are made of polyester blended material. Use the following guidelines to care and maintain the day/night shades:

- Leave Day-Night shades in the **UP** position when not in use to help shades hold their shape.
- String tension for the shades should be equal. The tension can be adjusted if the shades will not remain up.

**Dusting:**

Vacuum with a brush attachment, or use a dusting tool, on a regular basis.

**Cleaning:**

A dry foam cleaner may be used for soil and dirt removal. Follow all directions on the container or a cleaning solution of ¼ ounce clear liquid soap to 8 ounces water.

**NOTE: Do not use colored liquid soap as a stain may appear when fabric dries.**

**What is Mold?**

Mold is a plant belonging to the Fungi group. In short, mold is a type of fungus that occurs naturally in the environment, and is necessary for the natural decomposition of plant and other organic material. Mold spreads by means of microscopic spores borne on the wind, and is found everywhere life can be supported. Due to the fact mold spores are present in all types of environments, motorhome construction is not, and cannot be, designed to exclude mold spores. If the growing conditions are right, mold can grow in the motorhome. Most people are familiar with mold growth in the form of bread mold, and mold that may grow on bathroom tile. Mold spores, as they grow, can leave a musty odor, discolor fabric, and stain surfaces as well as cause considerable damage.

**What Does Mold Need to Grow?**

Being a plant, mold will need a food source in order to grow. Mold can use a variety of organic materials such as fabric, carpet, wallpaper, or even building materials, such as wood and insulation, to name a few. Grease films contain many nutrients for mold spores to grow when moisture and temperatures are right. Soil on dirty items such as fabrics and furniture may supply enough nutrients for mold to grow. Many of the synthetic fabrics such as acetate, polyester, acrylic and nylon are mildew resistant. However, soil on these fabrics may supply the nutrients to start mold growth.

Mold growth requires a temperate climate. The best growth occurs at temperatures between 40º F and 100º F. Finally, mold growth requires moisture. Moisture is a mold growth factor that can be controlled. By minimizing moisture inside the motorhome, mold growth can be reduced or eliminated.

Moisture in a motorhome can have many causes. Spills, leaks, overflows, condensation, and high humidity, to name a few. Good house-keeping and regular maintenance are essential in the effort to prevent or eliminate mold growth. If moisture is allowed to remain on a growth medium, mold can develop within 24 to 48 hours.

**Consequences of Mold:**

All mold is not necessarily harmful, but certain strains of mold have been shown to cause, in susceptible persons, allergic reactions, including skin irritation, watery eyes, runny noise, coughing, sneezing, congestion, sore throat and headache. Individuals with suppressed immune systems may risk infections. Some experts contend that mold causes serious symptoms and disease which may even be life threatening. However, experts disagree about the level of mold exposure that may cause health problems, and about the exact nature and extent of the health problems that may be caused by mold. Moreover, the Center for Disease Control states that a casual link between the presence of toxic mold and serious health conditions has not been proven.

Standards or threshold limit values for concentration of mold or mold spores have not been set. Currently, there are no EPA regulations or standards for airborne mold contaminants. There is simply no practical way to eliminate all mold and mold spores in the indoor environment. For example, studies have shown that ozone cleaners are not effective at killing airborne mold or surface mold contamination.

**Controlling Mold Growth:**

The owner can, and should, reduce or eliminate the occurrence of mold growth in the motorhome; thereby, minimizing any possible adverse effects that may be caused by mold. Taking the following steps can help reduce of eliminate mold growth in the motorhome.

1. Check for signs of mold prior to bringing items in the motorhome. Potted plants (roots and soil), furnishings, or stored clothing and bedding material, as well as many other household goods, may already contain mold growth.
2. Regular vacuuming and cleaning will help reduce mold levels. Mild bleach solutions and most tile cleaners are effective in eliminating or preventing mold growth.
3. Indoor humidity can be reduced by 30-60% when venting clothes dryers to the outdoors. Ventilate the kitchen and bathroom by opening the windows, by using exhaust fans, or a combination of both. Operating the air conditioning will remove excess moisture in the air, and help facilitate evaporation of water from wet surfaces.
4. Promptly clean up spills, condensation and other sources of moisture. Thoroughly dry any wet surfaces or material. Do not let water pool or stand in the motorhome. Promptly replace any materials that cannot be thoroughly dried.
5. **Inspect** for leaks on a regular basis. Look for discolorations or wet spots. Repair leaks promptly. Inspect condensation pans (refrigerators and air conditions) for mold growth. Take notice of musty odors, and any visible signs of mold.
6. Should mold develop, thoroughly clean the affected area with a mild solution of bleach. First, test to see if the affected material or surface is color safe. Should the mold growth be severe, call on the services of a qualified professional cleaner.
7. If materials with mold on them cannot be cleaned, they should be removed and properly disposed.

Whether or not a motorhome owner experiences mold growth depends largely on how the motorhome is managed and maintained. As a manufacturer, our responsibility is limited to things that we can control. As explained in the written warranty, we will repair or replace defects in the construction (defects defined as a failure to comply with reasonable standards of motorhome construction) for the Limited Warranty coverage period provided. **THE MANUFACTURER WILL NOT BE RESPONSIBLE FOR ANY DAMAGES CAUSED BY MOLD THAT MAY BE THE CONSEQUENCE OF OR ASSOCIATED WITH DEFECTS IN THE CONSTRUCTION.**

## PEST CONTROL

Pests can come in all sizes and shapes, from insects to mammal. Regardless of the area one lives in or travels to, it is safe in stating there will be pests waiting. These pests are not only annoying; they can pose health risk and create serious damage to the motorhome. There are a number of host-transmitted diseases that can be carried by a pest.

- Common pests include insects such as ants, cockroaches, termites, flies, pantry pests and wasps as well as wildlife such as rodents, raccoons, bats, birds and snakes. It is important to remember, pests are the same as humans in the fact they need food, water and a place to live. Eliminating any one of those elements will help significantly in controlling the pest.

To control pest infestation, eliminate those factors that attract pests, and take immediate steps to remove a pest as soon as the presence is detected. There are a number of steps that can be taken to help in controlling pests:

- Reduce clutter inside the motorhome and storage bays. All storage items, particularly food (including pet food), should be kept in tightly sealed containers. Seal all cracks and holes, and insure that window, door and vent screens are securely in place.
- Routinely clean the motorhome, including storage bays. Wipe down the water bay. Promptly remove all crumbs from areas where food is regularly prepared and eaten. Garbage should be placed in a sealed container and removed to an outside receptacle daily. Only put out pet food that will be immediately eaten.
- Keep foods such as flour, cereal, spaghetti and pet food in re-sealable containers with tight lids.
- Sweep and vacuum often (especially in eating areas) to help eliminate food sources for some pests.

- Seal cracks, crevices, and other gaps especially around doors and windows. Make sure all windows and doors are screened and fit the screens snugly in the frame.
- Many pests need moisture to successfully live and reproduce. Limit access to water or moisture sources by sealing cracks and leaks in pipes and faucets. Reduce moisture in the motorhome by controlling condensation, immediately wiping up spills and promptly repairing leaks. Be extra alert around areas that attract rodents and insects, including the sewer hose, fresh water hose, bay doors and items that may be leaning against the outside of the motorhome, such as fishing poles and golf clubs.
- When the motorhome is stored outdoors, clear the surrounding area of all rodent friendly hiding places - shrubs, trees and clutter. Completely seal the underside of the motorhome. Wire mesh will work well to prevent points of entry, but beware of blocking necessary air vents. Prior to operating the motorhome after storage, remove all insect and animal nests that may have developed around vents, engine compartments, and the exhaust pipe and in the wheel wells.

**Rodents:**

Rodents may chew through wires or build nests in components of the motorhome. Signs of rodent infestation include droppings, shredded material or chewed furniture fabrics and vinyl. Rodents like to build nests with wire insulation, and are commonly attracted to the outside coating of 110 wiring more than 12-Volt wiring.

**NOTE: Although the back cap on most motorhomes is well sealed, rodents are capable of chewing through the foam insulation and that area should be routinely inspected.**

If there are signs of rodent infestation around the motorhome, place traps or poisons in suspected areas. Keep the traps and poisons safely away from pets and children. Cheese is not the best bait for a rodent trap. Use peanut butter or chocolate in small amounts. Place the bait on the trigger of the trap to induce the rodent to climb onto the trigger to reach the bait. Rodents do not limit invasion to unused vehicles.

**Insects:**

Eliminate insects the moment a sign of infestation is spotted. If you are unable to identify the type of insect, purchase some sticky traps from the hardware store and place the tape where you have seen the insects. Once caught, seek assistance in identifying the insect and determining what will be required to remove the infestation.

Regularly inspect the exterior of the motorhome for signs of a budding wasp nest, and promptly destroy small nests before they become too large.

Spiders can be in any structure. Since they are predators and feed on living prey, this would indicate other smaller pests may be found. Immediately remove spider webs. Some types of spiders like to nest on top of the diesel tank and around the diesel hoses. Dispense of spiders using a vacuum. Use care to capture the spider and egg sacs. Throw the vacuum bag away in a sealed bag.

Fruit flies invade the motorhome by attaching themselves to fresh fruits and vegetables. Determine what food items are generating the flies and discard that item in an outdoor trash receptacle. Any remaining fruit flies can be eliminated with a homemade trap. Pour a few ounces of vinegar into a cup and cover the cup with plastic wrap. Secure the wrap with tape or a rubber band and poke a ¼" hole in the plastic. Place the trap in the area where fruit flies are present.

Ants live in colonies. Only a fraction of the ant colony will leave to seek food. Spraying pesticides will only kill the ants that are away from the colony. To eliminate all ants, the colony must be destroyed. Keep ants away from the sewer hose by spraying the hose ends with a soap and water solution.

Fleas can be removed by properly treating pets with a veterinarian-approved treatment and a thorough cleaning of the motorhome. Vacuum vinyl areas and tile floors to remove dust, flea larva and flea eggs. Follow by thoroughly washing those areas with soap and water. Carpets must be vacuumed and treated with a residual flea control product labeled safe for indoor carpet and furniture use. Perform the cleaning treatment daily for three days to insure that all fleas have encountered the treatment.

Flying outdoor insects are attracted to bright light. Yellow porch light covers on the motorhome work to discourage insect invasion. During nighttime hours insects will be attracted to docking lights, or other bright exterior lighting.

If the presence of moths is detected inside of the motorhome, usually by holes appearing in material, clean the affected clothing and all other items stored in the same area. Follow by completely cleaning the closet, dresser or storage area. If cracks are detected, seal the cracks and treat the area with a properly labeled indoor pest control product.

Even birds can be considered pests, particularly when the motorhome is parked in the flight path of a flock. Bird droppings are hard to remove and will leave stains. Prevent permanent staining to the motorhome roof by regularly cleaning the surface to remove all bird droppings.

**Damage from Pest:**

On one occasion a motorhome owner, investigating the cause of a failed inverter, discovered that a lizard had crawled in the inverter, shorted out the circuit board and died. Lizards can be captured using glue traps. To remove the lizard from the trap, dissolve the glue with vegetable oil and then release the lizard outside and well away from the motorhome. A scorpion will glow blue-green in UV light. If you suspect the presence of scorpions in the motorhome, investigate with an UV black light during the nighttime hours.

**What are the best sources of information about common household pests?**

The Internet is a great place to find information about common pests, however, the information is not always correct. The National Pest Management Association website can be useful resource about common pest. Another good source for information are colleges and universities with entomology departments (entomology is the study of insects).

Electronic pest control devices can be costly and most likely will not work on all types of rodents and insects. When calling on the services of a professional to combat pest infestation, call a reputable business that is licensed in handling pesticides. Check references. Explain that you are seeking assistance for a motorhome, as treatments may differ from standard household jobs.

If you do suspect a pest problem in the motorhome, consider professional pest control help. The following guidelines can be used for selecting a pest control service.

- A good place to start is to inquire as to who has used pest control services. Inquire about the type of pest problem encountered and how satisfied they were with the service.
- Membership in the national, state or local pest control associations is a good indicator that the company has access to modern technical information and is committed to further education.
- Reach a complete understanding with the company before work starts; find out what the pest is, how the problem will be treated, how long the period of treatment will be, and what results can be expected.
- Be sure to understand what is guaranteed and what is not.

## GENERAL LUBRICATION MAINTENANCE

Performing regular scheduled maintenance ensures reliable operation and optimum service life of the various chassis components. Completed maintenance brings peace of mind knowing the various components have received proper service. Failure to follow maintenance guidelines, or perform scheduled maintenance, results in inefficient operation, premature component wear or component failure resulting in breakdown.

Maintenance schedules are usually performed at certain mile or time intervals. When performing high level procedures, lower level service should also be performed.

**NOTE: Maintenance schedules are based on normal operating conditions and use. Operating under unusual or adverse condition shortens service intervals.**

**NOTE: Engine and transmission service intervals are listed in their respective manuals.**

### *Lubricants*

Many chassis components require lubrication. The types of lubricants used will vary with the application of the component. A component may fail prematurely due to lack of lubrication or from using an incorrect lubricant type. The component manufacturer usually recommends a particular type of lubricant with a minimum approval rating. Most lubricants are tested under strict guidelines set by the ASTM (American Society for Testing and Materials). The NLGI (National Lubricating Grease Institute) helps disperse information to the grease production industry. Grease containers usually have an approval rating by the SAE (Society of Automotive Engineers), Mil Spec (Military Specification), API (American Petroleum Institute) or by other recognized and accepted organizations. The correct lubricant type with an approved specific rating must be used whenever applying, changing or adding any lubricant. When purchasing lubricants for a specific application be sure the label affirms the type of lubricant required with the tested rating by the term "meets or exceeds" in accordance with the manufacturer specifications.

### *Lubricant Classification*

Lubricants are manufactured in many forms for a variety of applications. There are many different oil and grease consistencies each with a designed application. To properly select a particular type of lubricant for a specific application, the component must be evaluated. Component stress loads, ambient temperature, working temperature and environmental exposure are just a few of the variables to consider. Select the proper lubricant for its intended application. As an example: selecting high viscosity grease to lubricate a lock cylinder results in sluggish lock cylinder operation especially in a cool environment. Conversely, using graphite to lubricate a component that is under extreme temperature and load will result in component failure.

Grease ratings and their base compounds are especially important when selecting a lubricant type for an intended application. Some grease compounds are manufactured for multi-use application. These are acceptable if the grease rating is in accordance with the manufacturer's recommended lubricant type and rating.

Lubricating greases are made from different base compounds giving the grease different lubricating consistencies, properties and maximum operating temperatures. Most containers list the base compound and maximum operating temperature usually listed as melting point or drip point. Lubricating components, such as brake component for example, require a high temperature special base compound grease. Lubricating this type of component with other than specified grease type will result in inadequate lubricating qualities resulting in component malfunction or failure.

**Be Observant:**

When performing any scheduled maintenance, **inspect** the area around where you are working. For example, changing the oil, look at the rear differential. **Inspect** for visual signs of fluid leaks. Use your nose to detect early signs of trouble. Most fluids and lubricants have a distinct odor. Generally, odors are most detectable soon after parking. Unusual sounds are another method of detecting a problem early. Become familiar with the different sounds. If something sounds odd, smells peculiar or looks unusual investigate the situation.

## Proper Fluid Disposal

When performing service maintenance on the engine, transmission or rear axle, waste fluids and filters should be properly disposed of or recycled. Package used oils, antifreeze and other fluids in sealed containers. In many cases used oil is accepted free of charge at county disposal sites. Waste fluids are toxic to pets and other animals. Waste fluids should not be left in open containers. The sweet odor of antifreeze is attractive to pets, but highly toxic.

**CAUTION: Properly dispose of used antifreeze and waste oil. Animals like the sweet odor of antifreeze and may ingest it if left in open containers. Wipe up any fluid spills. Pets may lie in puddles of fluid, many of which are irritants and can cause severe chemical burns if not properly washed.**

## Greasing

When preparing to use a high-pressure grease gun, thoroughly clean all Zerk grease fittings before applying new lubricant. Keep paper towels or disposable rags handy when greasing. When lubricating items such as drive shafts and steer axles components, continued grease application is generally required until new grease appears at exit points.

Some items use sealed boots around the component to prevent moisture intrusion. When greasing these types of components care must be given to prevent excess lubricant pressure from rupturing the seal.

**WARNING: Always chock wheels before going underneath the motorhome.**

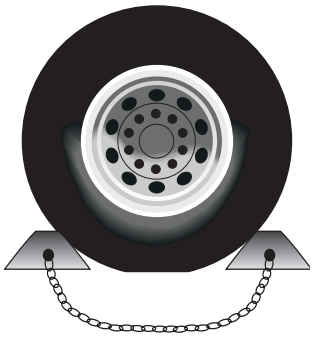


**To Apply Grease:**

- Clean the grease fitting. Initially operate grease gun until new lubricant discharges from nozzle then wipe nozzle clean. This avoids introducing contaminants into the component.
- Snap nozzle onto grease fitting.
- Nozzle must remain in line with the grease fitting during the application process. If the nozzle is not in line, lubricant will collect around nozzle and grease fitting, failing to lubricate the component.
- Wrap the nozzle with a paper towel or rag to prevent contamination and accidental soiling of other areas.

If the component does not accept grease the Zerk fitting may be plugged or damaged. Zerk fittings are replaceable and generally available at most auto supply stores. Zerk fittings come in variety of angles depending on the application. Every effort should be made to lubricate the component, as neglect will only result in premature component failure.

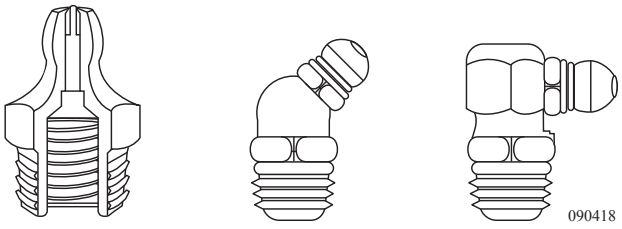


*Typical Zerk Fitting.*

**NOTE: Some grease fittings may not be accessible until the steering wheel is turned or the motorhome is moved slightly.**

Short term storage is defined as storing the motorhome for a period of thirty days or less. Properly preparing the motorhome during periods of short term storage will make bringing the motorhome out of storage a much easier process. Winterize the plumbing system if the motorhome is stored in winter months or if stored when temperatures are below 32º F.

**Checklist-Short Term Storage:**

- If applicable, retract the slide room(s). Do not store the motorhome with slide room(s) extended.
- Shut off all appliances. Close the primary LP-Gas valve.
- Remove all articles from refrigerator/freezer and clean thoroughly.
  Prop doors open to prevent mildew.
- Holding tanks should be drained and fresh water system winterized, with potable antifreeze or winterize the plumbing system using air pressure.
- Retract and secure all awnings.
- Turn **OFF** the battery cut-off switch.
- Batteries should be stored fully charged. Batteries stored in a discharged state will readily freeze.
- If possible, park the motorhome so that the batteries are accessible for charging or changing without having to move the motorhome.
- If available, leave the motorhome hooked to shore power. Leave the main battery disconnect switch **ON**.
- Careful placement of a small heat source in the interior will help control moisture. Desiccate filter systems help remove interior moisture.
- If AC power is not available turn the main battery disconnect switches **OFF**.
- If possible, store the motorhome inside a storage building.
- If stored outside, inspect all seams and seals for possible leakage.
- Store the motorhome with a full fuel tank to minimize moisture condensing at top of fuel tank.
- Vents and windows should be closed to prevent wind driven rain entrance.
- Tires should be stored at maximum inflation pressure.
- A full interior inspection for water leaks should be made bi-monthly, inspecting behind all cabinet doors and drawers.
- Start and run the generator at least 1/2 hour per month.

## Long Term

Long term storage of the motorhome can be defined as leaving a motorhome unattended for a period of thirty days or more. A motorhome requires protection from the elements just as a house or a car would. When left out in the environment without proper storage or maintenance, a motorhome, house or car is vulnerable to the moisture and oxidation processes inherent in the environment.

Preventative measures should be taken and preferable situations used when storing a motorhome. Such measures will aid in protecting and preventing a motorhome from the damaging effects caused by an accumulation of moisture.

**NOTE: The natural process of moisture in the air condensing will occur with temperature changes of 30º F or more in one day. Humidity readings of 60% or greater will allow the accumulated moisture to remain for extended periods of time.**

**If the motorhome is stored in a location where AC power is not available:**

- Turn off all the appliances.
- Turn off the battery cut-off switch.
- If possible, situate the motorhome so the batteries remain accessible. This allows a battery to be charged or replaced without moving the motorhome.
- Charge the batteries to a full state of charge.
- Turn the main battery disconnects **OFF**.
- When stored outside, use the available DC Volt meters to make a quick reference check of the batteries while the motorhome is in storage. If the motorhome is stored outside, solar panels may offset the parasitic loads.
- Preventative measures should be used if the voltage readings are low. When using preventative measures, taking the motorhome out of storage or moving the motorhome in case of an emergency is a much easier process.

**NOTE: Batteries in a low state of charge will readily freeze. Freezing will damage the battery.**

**CAUTION: A 20 Amp service using light duty extension cords and the required adapters create serious voltage losses. Line voltage loss and the resistance at each electrical connection is a hazardous combination and should be avoided. Damage to sensitive electronic equipment may result!**

**Type of surface to park and store the motorhome on:**

- The type of surface the motorhome is parked upon will affect how much moisture accumulation occurs on the chassis and flooring. Moisture can eventually seep into the interior.
- Parking the motorhome on a grass surface, with the tires supported by blocks, is a perfect situation for moisture to accumulate.
- A gravel covered parking area still allows moisture to evaporate from the ground, through the gravel and to the underside of the motorhome.
- Concrete pads should be sealed to prevent moisture coming up through the concrete flooring.
- Storage buildings with sealed concrete floors, or heated storage facilities, greatly reduce the amount of moisture accumulation and protects the motorhome from moisture damage.

**If the motorhome is stored outdoors:**

- The interior should be heated to help prevent mold and mildew growth. Moisture removing desiccate filter systems are available from hardware and RV supply stores. Place the filter system inside the motorhome to reduce inside moisture condensation or humidity. These systems help control mold and mildew growth.
- Proper winterization of the fresh water system will prevent potential damage in extreme cold.
- Ultraviolet radiation affects soft goods and rubber products such as privacy curtains, window shades and tires. These items should be protected.
- Cardboard templates can be made for the windows to protect these items from exposure to direct sunlight.
- Tire covers are available to protect the sidewall of the tires from cracking. Make sure the tires contain the correct air pressure. Underinflated tires can be damaged.
- Washing the exterior regularly will help control moss accumulation. The clear coat has UV protective substances. Waxing the motorhome twice a year will augment these substances.

**Inspect the motorhome:**

- Perform a full interior inspection for water leaks every two weeks while the motorhome is in storage. Open all cabinet doors looking for signs of dampness or leaks. Inspect the ceiling areas around roof vents or other roof openings.
- The roof and sidewall seams should be inspected and cleaned at least twice a year. **Inspect** for exterior sealant gaps of all roof seams, vents, skylights, roof air conditioners and windows. If necessary, use the proper sealants and recommended application procedures.

**Fuel:**

A full tank of fuel will help minimize moisture condensing at the top of the tank.

**Brakes:**

Brakes also suffer from non-use during periods of storage. The bare metal machined surfaces of brake drums or rotors have only a light coating of dust from the brake lining friction material. The brake dust is the only thing protecting the bare metal surfaces from rusting. Only regular brake applications dry the moisture preventing rust on brake drum or rotor surfaces. During periods of non-use, oxygen and moisture oxidize the machined surfaces. Only occasional use keeps these surfaces from oxidizing. Rusty brake drum or rotor surfaces permeate the brake linings upon the first few applications, reducing the friction action of the linings.

**Engine:**

Internal combustion engines need to be “exercised” on a regular basis. This will ensure that an adequate supply of lubricating oil coats the cylinder walls and piston rings. Valve and valve seat surfaces also suffer from non-use. Some valves will remain open depending at which part of the combustion cycle the engine has stopped. The heat and cold of the day allows moisture to accumulate through the exhaust system.

**Electric Motors:**

Electric motors in the motorhome should be operated occasionally to help lubricate and keep surfaces rotating freely. These items include the roof air conditioners, dash fans, dash blower motor, furnace motors and powered roof vents.

- **Plumbing Lines** - Drain and protect by filling with approved RV antifreeze.
- **Fresh Water Tank -** Drain.
- **Body -** Clean and wax. Oil locks and hinges. Repair roof seams as needed.
- **Countertop and Cabinets -** Wash with mild soap and water.
- **Curtains -** Remove and clean according to care specifications.
- **Windows -** To protect the interior fabric from fading, cover windows by pulling blinds, closing shades or using a separate cover such as a sheet.
- **Holding Tank -** Drain and rinse. Close valves.

**Add a small amount of antifreeze to waste holding tanks to keep valves and gaskets lubricated.**

- **Drain Traps -** Pour RV antifreeze down all drains.
- **Refrigerator -** Clean and leave both doors propped open. Cover the exterior panels and roof vents.
- **Batteries -** Add distilled water and recharge if needed. Disconnect the cables. Remove the batteries and store them in a cool dry place. Check and recharge as needed. Never park the coach where the battery door cannot be opened.
- **Air Conditioner -** Remove the air filters. Clean or replace.
- **Roof -** Keep clear of snow accumulation or damage may occur.
- **Interior/Exterior -** Storing under cover or indoors helps extend interior and exterior life.
- **Fuel Tank -** Tank should be full of fuel.

## Removal from Storage

If the motorhome was properly and carefully prepared for storage, removing it from storage will not be difficult. The following checklist pertains to items or areas which should be checked before operating or moving the motorhome. If the motorhome was not properly winterized, extensive freeze damage or other serious deterioration may have occurred. Consult a dealer or an authorized service center for advice.

- Thoroughly **inspect** the outside of motorhome. Look for animal nests in the wheel wells or in other out of the way places.
- Remove all appliance flue vent covers, ceiling vent covers and air conditioning covers. Be sure the refrigerator openings are free of debris, insect nests, webs, etc.
- Open all doors and compartments. Check for animal or insect intrusion, water damage or other types of damage which may have occurred.
- Check the state of charge of the batteries. If necessary fill the cells with distilled water only and charge as necessary. Inspect the cable ends and terminals. They should be clean and free of corrosion.
- Check all the chassis fluid levels: engine oil, engine coolant, hydraulic fluid reservoir, transmission oil and rear axle oil.
- Start the engine, allowing it to reach operating temperature. Ensure the engine instruments are indicating proper readings.
- While the engine is running check the operation of headlights, taillights, turn signals, back-up lights, license plate light and emergency flasher. Operate the dash air conditioner. If the air conditioner does not work, or the compressor makes unusual noises, have the system checked by a qualified air conditioner technician.
- Shut the engine down. Adjust or add fluids as necessary. **Inspect** the engine for fluid leaks. Look under the motorhome for any other type of fluid leaks.
- Drain, sanitize and flush the fresh water system as outlined in the ***Water Systems - Section 6***. **Inspect** the sewer drain hose and connections for leaks. Replace if necessary.
- Operate all faucets and fixtures in the fresh water system. Run a sufficient amount of fresh water through all the water lines and faucets to thoroughly purge any potable antifreeze from the fresh water system.

**NOTE: Discard at least the first two trays of ice from the icemaker to ensure the ice does not contain traces of antifreeze or other contaminates.**

- Open cabinet doors and drawers. **Inspect** for water leaks at joints or fittings. Repair as necessary.
- Operate all 12 Volt lights and accessories. If something does not work there may be a bad 12 Volt circuit breaker or blown fuse.
- Install new batteries in battery operated safety detectors or devices. Test the carbon monoxide, LP-Gas and smoke detectors for proper operation.
- Check that the monitor panel is functioning properly.
- Inspect the 120 Volt electrical system which includes the power cord, inverter/converter all outlets and exposed wiring.

**NOTE: Prepare the generator for operation following the instructions in the Generator Manual.**

- Start and run the generator.
- Confirm that the batteries are charging. Operate the 120 Volt appliances and air conditioners. If an electrical item or appliance is not functioning properly, contact the dealer or an authorized service center to have it evaluated.
- Have a qualified technician **inspect** the LP-Gas system and perform an LP-Gas leak test. The leak test should also include an LP-Gas regulator adjustment (if needed). The test can also verify if the regulator is faulty and should be replaced. Have the LP-Gas tank inspected.
- Operate each LP-Gas appliance. Observe all burner/pilot flames for proper color and size.
- **Inspect** and clean the interior.
- Check the sealant around all roof and body seams and windows. Reseal if necessary.
- **Lubricate** all the exterior locks, hinges and latches with a graphite lubricant.
- Check the windshield wiper blade condition. Check the wiper/washer operation.
- Wash and wax the exterior. Check the body for scratches or other damage; touch up or repair as necessary. Flush the underside thoroughly.
- Run through the operational checks for steering, brakes, engine and transmission. Operate the motorhome slowly during these checks to allow sufficient circulation of fluids and resetting of the components.
- If desired, have the dealer or repair center double-check preparation to make any necessary adjustments and/or correct defects.

## ~ NOTES ~

# LaPalma- Appliances


**APPLIANCES - INTRODUCTION .....155**
**REFRIGERATOR .....155**
Operation Specifics .....156
Control Panel - Two Door.....157
Control Panel - Four Door (Opt.) .....158
Icemaker (Opt.) .....160
Doors.....161
Alarm.....161
Service.....162
Cooling Unit Fans (Four Door Models) .....162
Storage .....162
**MICROWAVES - GENERAL INFORMATION.....162**
Operation - Microwave Cooking.....164
Operation - Convection Cooking (Opt).....165
Maintenance.....166
Fan.....166
Charcoal Filter .....167
**COOKTOP.....169**
**COOKTOP WITH OVEN (OPT.) .....171**
**WALL THERMOSTAT.....172**
**AIR CONDITIONER - ROOF.....172**
Operating Instructions .....173
Heat Pump (Opt) .....174
Return Air Filters.....175
**FURNACE.....175**
Operating Instructions .....176
Using the Furnace.....176
Tips.....177
If the Furnace Fails to Light.....177
**FIREPLACE ELECTRIC (OPT).....178**
Operation .....179
Maintenance.....180
**WATER HEATER .....182**
Before Using the Water Heater.....182
Operation .....183
Ignition Module Function.....184
Thermostats.....185
Water Heater Bypass .....185
Pressure  Temperature Relief Valve .....186
Burner Compartment.....187
Tips.....187
Draining & Storage .....187
**WASHER-DRYER PREPARED (OPT).....188**
**WASHER-DRYER (OPT.).....189**
Test Procedure .....189
Washer-Dryer Maintenance.....191
Winterizing the Washer-Dryer.....192

## APPLIANCES - INTRODUCTION

This section covers operation and care of various appliances found in the motorhome. The motorhome is equipped with a refrigerator, cooktop range, microwave, furnace, water heater, roof air conditioner and other optional appliances. Many of these appliances operate on AC or DC current, LP-Gas or a combination of all three.

**Detailed information with CAUTION or WARNING instructions for the various appliances, other than what is found in this section, can be found in the manufacturer's manual.**

**WARNING: Before entering any type of refueling station make sure all LP-Gas operated appliances are off. Most LP-Gas appliances used in recreational vehicles are vented to the outside. When parked close to a gasoline pump it is possible for fuel vapors to enter this type of appliance and ignite, resulting in an explosion or fire. Carbon monoxide gas may cause nausea, fainting or death. Operating an LP-Gas appliance with inadequate ventilation or partial blockage of the flue can result in carbon monoxide poisoning. Do not store flammable liquids such as lighter fluid, gasoline or propane in the outside refrigerator compartment.**

## REFRIGERATOR

The refrigerator in the motorhome operates on a different principle than a standard household refrigerator. Knowing these differences should answer questions or solve problems that may arise. A standard household refrigerator uses a compressor to pump refrigerant. This system is efficient as long as 120 Volts AC is available.

The motorhome refrigerator uses a different refrigerant. The refrigerant is heated which causes the refrigerant to circulate and vaporize. Using gravity, the refrigerant returns to the absorber vessel to start the process again. To ensure longevity and proper operation of the refrigerator, follow the specific guidelines in the refrigerator manual. With proper care and maintenance, the refrigerator should provide years of trouble-free service.

**NOTE: Refer to the refrigerator manual for detailed operating and maintenance instructions.**

## Operation Specifics

- The refrigerator operates from LP-Gas or 120 Volts AC electric.
- DC Voltage must be no higher than 15.4 Volts DC or lower than 10.5 Volts DC.
- AC voltage must be no higher than 132 Volts AC or lower than 108 Volts AC.
- It is important to operate the refrigerator only when level. Level the refrigerator (from front view) within 3º side to side and 6º front to back using a torpedo or bulls eye (fence post) level. Place the level on the freezer plate. The level should be within the circle by a half of a bubble. Generally, this is within comfortable living conditions.

**NOTE: Operating the refrigerator "off level" separates the chemicals that crystallize and block the circulation action of the cooling unit. Damage is cumulative and irreversible.**

**WARNING: Do not use the refrigerator if there is an ammonia smell inside or outside of the refrigerator, or if a yellowish substance appears inside or at the outside access compartment. This can be an indication of a refrigerant leak. Contact an authorized repair facility.**

**NOTE: To reduce the possibility of food spoilage, keep the interior box temperature at or below 54º F. The refrigerator will consume more energy to maintain low temperature, especially in hot, humid climates. Lower temperature may also lead to quicker frost build-up.**

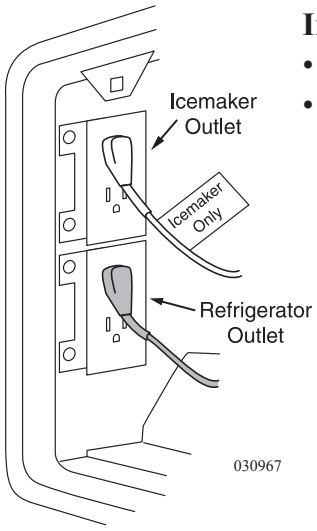


A

**In order for the refrigerator to operate:**

- The house batteries must be charged.
- The primary LP-Gas valve must be open.

**A.** The refrigerator AC cords must be plugged in (located outside behind refrigerator access door).

**B.** The water valve (located under refrigerator) must be open if the refrigerator is equipped with an icemaker.

**C.** If the controls do not light up check the house batteries charge status or see if the 12 Volt wires are plugged into the refrigerator's circuit board (located outside behind refrigerator access door).

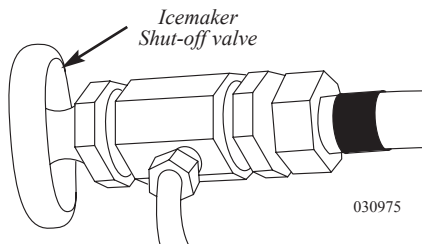


B

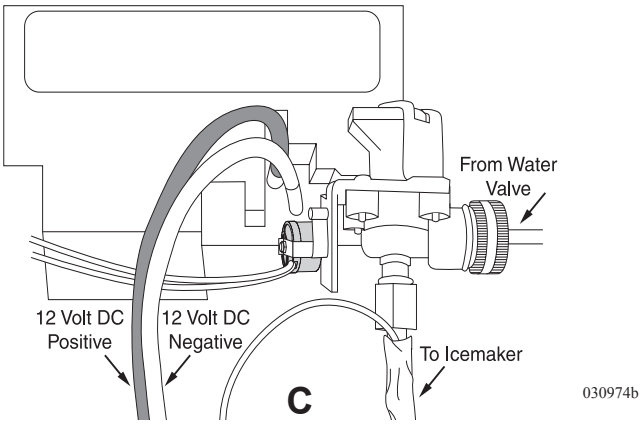


C

## Control Panel - Two Door

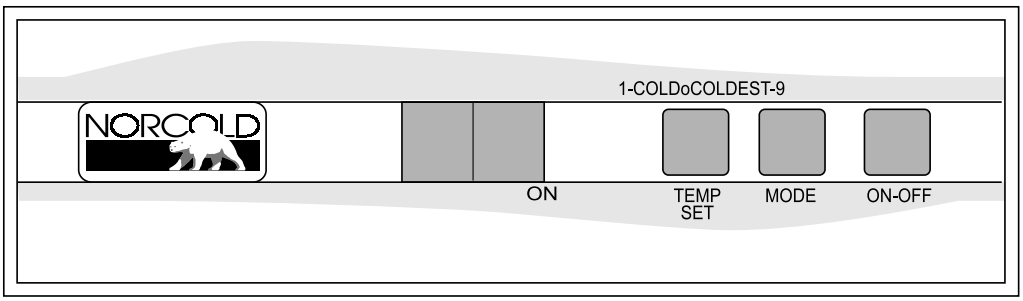


030864C

• **ON/OFF Button -** Turns the refrigerator on or off.
- Push the **ON/OFF** button to start the refrigerator in **Auto** mode.
- Push and hold the **ON/OFF** button for two seconds to shut it off.

• **TEMP SET Button -** Adjusts the temperature.
- To adjust push and hold the **TEMP SET** button.
- Number "**9**" is the coldest setting.

• **MODE Button -** Controls the operation mode of the refrigerator.
- Push and hold the **MODE** button to select between Automatic AU, AC or LP operation.

**Manual Mode:**
When one of the two manual modes is selected:
**1. AC** = The refrigerator is operating on AC electric.
**2. LP** = The refrigerator is operating on LP-Gas.

**Automatic Mode:**
The refrigerator selects AC power over LP-Gas in **Auto** mode (**AU**). The controls select the energy source in this sequence.

1. When 120 Volts AC is available "**AU AC**" flashes in the display. This indicates the refrigerator is operating on AC electric. After ten seconds, the "**AU AC**" goes off and only a power indicator remains.
2. If 120 Volts AC is not available, "**AU LP**" flashes in the display. This means the refrigerator is operating on LP-Gas.
3. After the refrigerator is operating, press the **TEMP SET** button and set the desired temperature.

If the LP-Gas does not ignite within 30 seconds, the control changes to a different energy source or the gas safety valve closes and **F** displays. Turn the refrigerator off then back on. If the gas does not ignite after several attempts, consult a dealer or authorized Norcold service center.

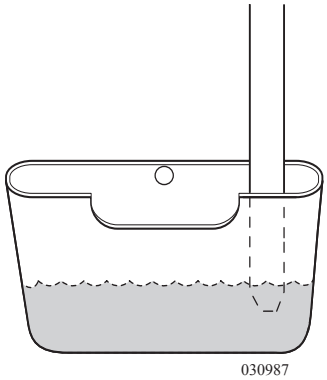


*Located behind the outside access.*

**Tips**

- Cool items first, if possible, before putting them into the refrigerator.
- Keep the doors shut. Know what you want before opening the doors.
- Allow the refrigerator 24 hours of operation before actual use to help get a "head start" with the refrigeration process.
- A box of open baking soda will help absorb food odors.
- Refrigerator icing can be slowed in high humidity if the end of the drain tube is submersed in drip pan.

## *Control Panel - Four Door (Optional)*

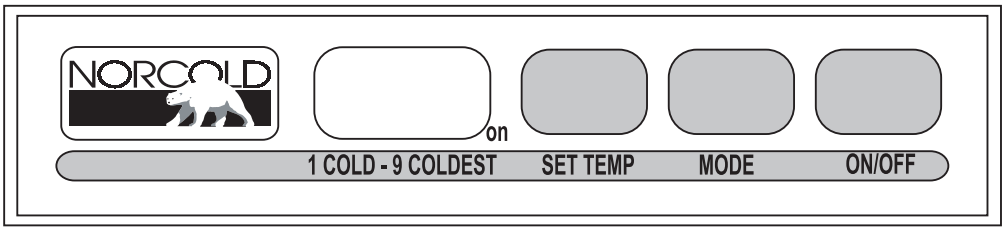


*The Refrigerator Control Panel requires 12 Volt DC to operate.* 030864

- **ON/OFF Button**

- Turns the refrigerator on or off.
- Push the **ON/OFF** button to start the refrigerator in Auto mode.
- Push and hold the **ON/OFF** button for two seconds to shut it off.

- **LED Display -** This screen is used for mode, temperature and fault code display.

- **MODE Button -** Controls the operation mode of the refrigerator.
- Push and hold the **MODE** button to select between Automatic AU, AC or LP operation.

- **TEMP SET Button -** Adjusts the temperature.
- To adjust push and hold the **TEMP SET** button.
- Number "**9**" is the coldest setting.

**Manual Mode:**

When one of the two manual modes is selected:

**1. AC** = The refrigerator is operating on AC electric.

**2. LP** = The refrigerator is operating on LP-Gas.

**Automatic Mode:**

This feature selects AC over LP-Gas operation. If AC discontinues, the alarm sounds and the refrigerator switches to LP-Gas operation. If the refrigerator fails to light, the alarm sounds and a code displays.

- Press and hold the **MODE** button until **AUTO** displays, release the button.
- Press and hold the **TEMP SET** button until the desired temperature displays, release button.
- In **AUTO** mode, AC or LP will remain lit for 10 seconds or when a mode has changed.

If the LP-Gas does not ignite within 30 seconds, the control changes to a different energy source or the gas safety valve closes and **F** displays. Turn the refrigerator off then back on. If the gas does not ignite after several attempts consult a dealer or authorized Norcold service center.

**Tips**

- Cool items first, if possible, before putting them into the refrigerator.
- Keep the doors shut. Know what you want before opening the doors.
- Allow the refrigerator 24 hours of operation before actual use to help get a "head start" with the refrigeration process.
- A box of open baking soda will help absorb food odors.
- Refrigerator icing can be slowed in high humidity if the end of the drain tube is submersed in drip pan.

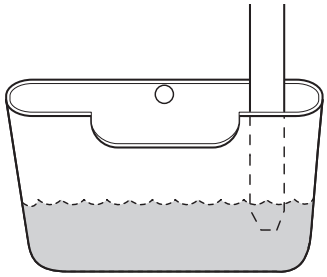


*Located behind the outside access.*

## *Icemaker (Optional)*

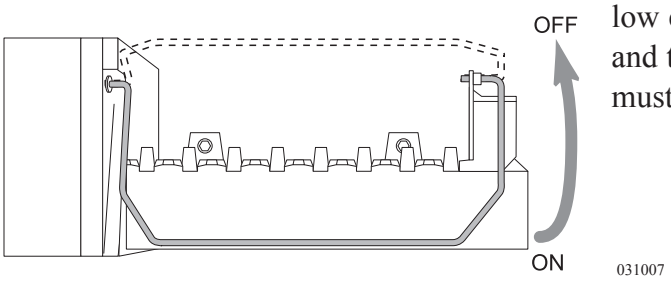


The icemaker works from 120 Volts AC only. The icemaker functions only after the freezer temperature is low enough. City water or the water pump must be on and the valve for the water supply line to the icemaker must be on.

- Pull the metal arm (bail) down to turn the icemaker on.
- Push the arm up to turn the icemaker off.

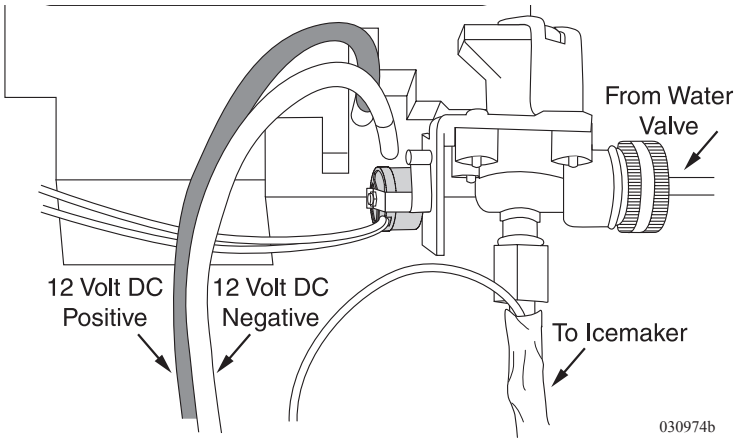


**Inverter Mode (Optional):**

If 120 Volt AC is not available from the generator or from shore power the icemaker can still operate by using the inverter to supply the 120 Volt AC. The refrigerator will not operate on AC Electric when using the inverter and must be running on LP-Gas.

House battery power will be consumed when using the inverter. When possible hook to shore power or start the generator when using the icemaker.

**To Enable this Feature:**

1. Select LP-Gas operation for the refrigerator.
2. Allow the freezer to reach ice freezing temperatures. This may take up to 24 hours from initial refrigerator start up.
3. Turn on water pump or city water.
4. Turn the inverter ON.
5. The icemaker will start automatically when the freezer temperature is satisfied.

**To Disable this Feature:**

1. Turn the inverter **OFF**.
2. Start the generator or plug into shore power if available
3. Select AC operation for the refrigerator.

**Water Line Heater:**

A thermal disc supplies voltage to heater tape when ambient temperature is less then 38° F (+/- 4°). It shuts off at temperature greater than 48° F (+/- 5°). The water line heater is only for the line from the solenoid to the icemaker. The line from the shut-off valve to the water valve is not protected.

**NOTE: If the icemaker is in operation while the motorhome is in motion, water may spill out of the ice tray. Raise the icemaker arm to stop ice production while in transit. Do not use the first one or two trays of ice if the refrigerator has been in storage. Ice cubes may have contaminates. Do not operate the icemaker without water pressure supplied to the refrigerator. This can cause damage to the icemaker assembly.**

## Doors

The refrigerator doors use a positive latch that secures the door with a "click" to prevent the door from opening while traveling. The doors use a heating element located in the flapper on the left door (four-door model) or in the door (two-door model). The heating element activates when operating the refrigerator in any mode to help prevent moisture accumulation in high humidity conditions.

When storing the motorhome, the refrigerator doors have a storage position that locks the doors partially open. This will help reduce odor from mold and bacteria. A completely sealed refrigerator in storage is a perfect environment for mold and bacteria to grow.

To use the storage feature,partially open doors and slide tab into the cut-out of the strike plate.

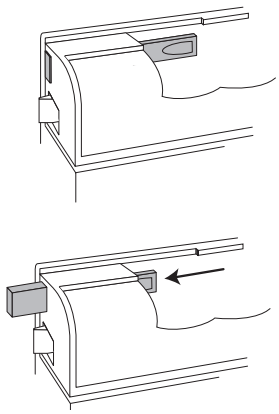

030965

## Alarm

The refrigerator uses an audible alarm that will sound for the following reasons:

1. DC or AC voltage is higher or lower than allowed.
2. Refrigerator is set to Auto and 120 Volts AC is discontinued.
3. The refrigerator fails to light on LP-Gas or fails to light after a period of operation.
4. Door is open longer than two minutes.
5. The circuit board detects a failure displaying a code.

**NOTE: If the alarm sounds, note the code in the LED display and turn the refrigerator off to silence the alarm.**

**Refer to the manufacturer's manual for the list of codes and their meanings.**

**WARNING: Make sure all flames are extinguished and the LP-Gas valve is off before refueling. LP-Gas and gasoline are highly flammable which can ignite, resulting in an explosion, fire or death. Many states have passed laws regarding having the LP-Gas valve open while traveling. Know the laws for the particular state in which you are traveling.**

## Service

The LP-Gas function of the refrigerator and LP-Gas pressure will need servicing yearly, depending on use. Over time, the BTU rating of the flame can change, affecting the refrigerator's performance. Ambient temperature and humidity can also affect performance and function. The BTU rating lowers when operating on LP-Gas at an altitude higher than 5,500 feet. This affects the refrigerator's performance. If possible, switch mode operation to AC while at a higher altitude.

## Cooling Unit Fans (Four Door Models)

The cooling unit is equipped with a pair of cooling fans to help pass air across the cooling unit. These fans start automatically and are audible when in operation.

## Storage

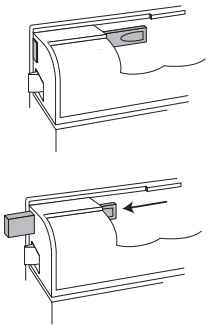

030965

- Turn the refrigerator off and remove all items. Leave the drip tray under the cooling fins.
- Shorten defrost time by using trays of warm water. Do not use a heating gun, hair dryer or sharp objects to remove frost as these can damage the interior or cooling unit.
- Wash the interior using mild spray cleansers or a solution of liquid dish detergent and warm water. Do not use scouring pads or abrasive cleansers as these can damage the interior finish.
- Rinse with a solution of baking soda and water. Dry with a clean cloth.
- Lock the doors open.

**CAUTION: When defrosting, do not use a hot air blower. Permanent damage could result to plastic parts. Do not use a knife, ice pick or any other sharp instrument to remove ice from the freezer as they can puncture the system.**

## MICROWAVES - General Information

The microwave works from 120 Volt AC supplied by shore power, the generator or the inverter. Microwaves heat food using sound waves generated at a very high frequency (2,450 MHz) to agitate water, sugar and fat molecules. The higher the water and fat content, the shorter the cooking time. A turntable rotates inside the microwave when it is operating to heat food evenly. The turntable can be turned off if a baking dish or other large item is used. The microwave is designed to sit over the cooktop. The microwave's two-speed ventilation fan is handy when using the cooktop. The fan draws air in from the bottom of the microwave through a pair of grease filters then discharges the filtered air out through a charcoal filter at the top. If the bottom of the microwave becomes too warm, the ventilation fan activates automatically from heat produced by the cooktop.

The microwave offers many features which may include: varied cooking times with different power settings, automatic sensor cooking, a kitchen timer, a Metric to American conversion chart (which includes temperature and weight), on screen programming help, childproof lockout and auto defrost cycles. The screen can display one of three different languages.

**Microwave Tips:**

- When the microwave is first powered up, the display will blink. Press Stop/Clear.
- Limit microwave use when dry camping. House battery power is quickly consumed.
- Turn the oven off before cleaning.
- Keep the inside of the oven clean. When food spatters or spilled liquids adhere to oven walls, wipe with a damp cloth. Mild detergent may be used if the oven gets dirty. Harsh detergent or abrasive cleaner is not recommended.
- Clean the outside oven surface with soap and water. Wipe away any residue using a damp cloth. Dry with a soft cloth. To prevent damage to the operating parts inside the oven, do not allow water to seep into the ventilation openings.
- If the control panel becomes wet, clean with a soft, dry cloth. Do not use harsh detergents or abrasives on the control panel.
- If steam accumulates inside or around the outside of the oven door, wipe it away with a soft cloth. This may occur when the microwave oven is operated under high humidity conditions and in no way indicates a malfunction of the unit.
- Remove the glass tray for cleaning. Wash the tray in warm sudsy water or in a dishwasher.
- Clean the roller guide and oven cavity floor regularly to avoid excessive noise. Wipe the bottom surface of the oven with mild detergent water or window cleaner and then dry. The roller guide may be washed in mild sudsy water.
- The glass tray and roller guide must always be in place during cooking.
- Place the food in a suitable container.
- Ensure the door is firmly closed before use.

**Microwave Facts:**

One of the most useful documents is the operations manual for the microwave, located in the owner's information file box. Read it carefully and keep it for reference. Another useful item is a microwave cookbook. Many will contain information about cooking principles, techniques, hints and recipes. Ensure food is in the microwave during operation to absorb the microwave energy. The magnetron, cycling on and off, may be heard for power levels less than 100%.

Condensation is a normal occurrence in microwave cooking. The moisture within foods and the room humidity will influence how much moisture condenses in the microwave. Covered foods will not usually produce as much condensation as foods that are not covered.

**NOTE: The microwave is for food preparation only. Do not use the microwave to dry clothes, newspapers, shoes or other items.**

## Operation - Microwave Cooking

**About Cooking:**

- Food should be arranged with the thickest area towards the outside of the dish.
- Monitor cooking times. Use the shortest amount of time required for cooking and add time as needed. For popcorn, follow product instructions and carefully monitor for the duration of popping time.
- Cover the food while cooking to prevent splatter and reduce condensation.
- Stir the food from the outside of the dish to the center, once or twice, between cooking.
- Turn food over during cooking to speed cooking times. Large food items should be turned at least once during cooking time.
- Use standing times to prevent overcooking. Covered food will continue to cook after it is removed from the microwave oven.
- Check for indications that the food is thoroughly cooked.
  - Food is steaming throughout, not just around the edges.
  - Poultry thigh joints come apart and move easily.
  - Meat or poultry is not pink in color.
  - Fish is opaque and flakes easily with a fork.
  - Center bottom of the dish is very hot to touch.

A meat thermometer is the best way to ensure that the food is cooked. The meat thermometer should be inserted into the thickest part of the meat, away from bone or fat. Most food should range between 160º F to 180º F. Never leave the thermometer in during cooking as it can shatter.

| FOOD | DO | DO NOT |
|---|---|---|
| Eggs, Sausages, Fruits & Vegetables | • Puncture egg yolks before cooking to prevent bursting.<br>• Pierce skins of potatoes, apples, squash, hot dogs & sausages to allow steam to escape. | • Cook eggs in shells.<br>• Reheat whole eggs. |
| Popcorn | • Use specially bagged popcorn for use in the microwave.<br>• Remove popcorn when popping slows to 1 or 2 seconds in between pops. Use the POPCORN setting. | • Pop popcorn in regular brown bags or glass bowls.<br>• Exceed maximum time on popcorn package. |
| Baby Food | • Transfer baby food to small dish & heat carefully. Stir often. Check temperature before serving. | • Heat disposable bottles.<br>• Heat rubber nipple.<br>• Heat baby food in original jar. |
| General | • Cut filled baked goods after heating to release steam.<br>• Stir liquids before and after heating to avoid boiling over.<br>• Use deep bowls for cooking liquids or cereals to avoid boiling out of the container. | • Heat or cook in closed jars or air-tight containers.<br>• Use for Canning. Cooking and heating may not destroy bacteria.<br>• Deep fat fry.<br>• Dry wood, gourds, herbs or wet paper. |

The convection microwave oven is the ultimate cooking team. This state-of-the-art system brings together the best of both worlds. Enjoy the browning and crisping capabilities of convection plus the speed of microwave cooking. Microwaving brings out the natural flavor of foods and keeps them moist and juicy. Convection cooking adds the advantage of browning and crisping food. Combination settings LOW MIX and HIGH MIX use convection heat to seal and brown the outside while using microwave energy to make sure the interior is cooked.

**Roasting Techniques:**

The HIGH MIX setting roasts perfectly. Preheating the oven is not necessary for roasting meat and poultry. Place foods on the broiling trivet which holds meat juices. Never cover the broiling trivet with aluminum foil. You don't need a pan because the turntable will catch the drippings.

- Shield thin or bony areas of roasts or breast, wing tips and legs of poultry to prevent over browning.
- Should you wish to have gravy, place an oven-glass baking dish below the meat on the broiling trivet to collect juices. When food is done, simply make gravy in the baking dish and cook using HIGH power.
- Roast less-tender cuts of beef in heat-resistant and microwave oven-safe covered casserole or in oven cooking bag set in baking dish. Covering helps tenderize meat. You may also use the SLOW COOK setting.
- Use dual safe microwave/convection meat thermometer.
- Check doneness after minimum time using a meat thermometer. Add additional time, if necessary.
- After cooking, cover roasts with "tent" of foil and let stand 5 to 10 minutes before carving.

**Broiling Techniques:**

The oven broils both sides of the food simultaneously giving tender, juicy results. Preheating is necessary so program the oven and touch START. During the preheat time, prepare food by removing excess fat, slashing edges and seasoning, if desired. Place on broiling trivet - NOT COVERED BY FOIL.

- Spray trivet and turntable with non-stick vegetable cooking spray for easy cleanup.
- Using a preheated broiling rack can give a grilled appearance to steaks, hot dogs, etc.
- Broil food in advance, if desired, then slice. Individual servings may be reheated as needed by microwaving at MEDIUM (50%).
- Clean by turning broiling trivet over onto the turntable. Place 2 cups of water in the turntable and heat for 2 minutes on HIGH power. Remove to finish cleaning. Wipe out oven interior.

**Baking Techniques:**

Evenly heated air movement works to bake and brown foods. Preheating the oven is necessary with convection cooking of smaller, faster cooking food items that require less than 20 minutes of baking. Foods requiring longer baking time can be cooked using LOW MIX.

- To proof yeast dough, place dough in a well-greased bowl or loaf pan; cover with damp cloth. Place in oven at SLOW COOK 100ºF for 30 to 45 minutes. Frozen dough will take longer, 2 to 2¾ hours.
- Use the turntable for shaping and baking yeast braids or other special shapes.
- Baking rack is placed on the turntable for two-level cooking, such as layer cakes, muffins, etc.

## Maintenance

The exterior of the microwave is plastic and metal. The interior is metal. Do not use scouring pads, harsh or abrasive cleanser, chemical cleaners or petroleum based thinners as these can damage the finish. Use mild soap and water with a damp cloth or paper towel to remove most stains or spills. When cleaning the touch pad open the door to prevent accidental operation. Use mild soap and water with a soft cloth. Avoid using excess amounts of water on the touch pad. The turntable plate and oven racks are dishwasher safe.

## Fan

The fan automatically starts when heat rises from range surface or when convection settings are used. The fans can not be shut off manually and will remain on until excessive temperatures have decreased.

## Charcoal Filter

Depending on usage the charcoal filter should be replaced every 6 to 12 months. Use the following procedure to remove the louvers to replace the charcoal filter and oven light.

1. Remove power to the microwave.
2. Remove the screws securing the louver.
3. Insert a flat edge screwdriver over each tab pressing downward and moving the louver away from the microwave.
4. Remove the louver from the face of the microwave.
5. Remove and replace the charcoal filter ensuring the filter is positioned on the supporting tabs.
6. Replace louver and mounting screws.

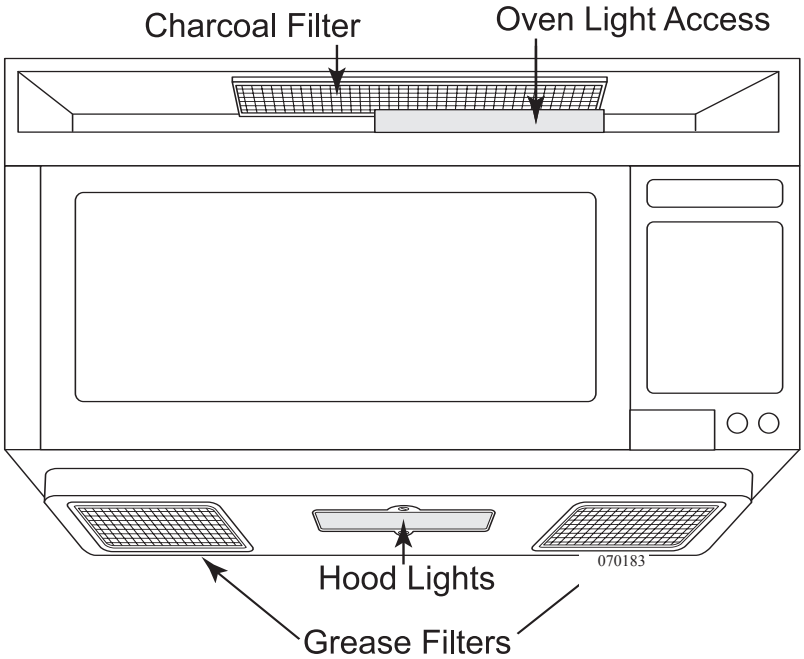


**Oven Light:**

1. Remove the louver as indicated under the charcoal filter.
2. Slide the metal light cover forward and lift upwards.
3. Remove the light bulb and replace only with an equivalent watt bulb.
   **DO NOT EXCEED 30 WATTS.**
4. Replace light cover, louver and mounting screws.

**Hood Light:**

1. Remove power to the microwave.
2. Remove the screw securing the light cover.
3. Remove the light bulb and replace only with an equivalent watt bulb.
   **DO NOT EXCEED 30 WATTS**
4. Close the cover and re-secure with screw from step two.

**CAUTION: Light cover may be hot. Do not touch glass with lamp ON. Never use the light for prolonged periods such as a night light.**

**Grease Filters:**

Do not operate the oven without the grease filters in place. This can damage the microwave. Grease filters should be cleaned at least once a month. To remove the filters, use the pull-tab to slide the filter to the end of the opening and tip down. Soak the filters in the sink or in a dishpan filled with hot water and detergent.

- Do not use ammonia or other alkali-based products that may darken the filter material.
- Agitate the filter. Use a scrub brush to remove caked on grease.
- Rinse the filter thoroughly and shake dry. Place the filter back into the opening, tip upward and slide filter to the end of the opening. Lock in place. Be careful not to kink or warp the filter upon installation.

**Microwave Cooking Safety:**

- Always use pot holder to prevent burns when handling utensils that are in contact with hot food. Enough heat can transfer from food through utensils to cause skin burns.
- Stay near microwave while operating and check frequently to prevent overcooking.
- Never use the cavity as a storage area for cookbooks or other items.
- Avoid steam burns by directing steam away from face and hands.

The cooktop utilizes sealed glass cooktop surface burners that spread heat evenly across the bottom of the cookware surface. The cooktop uses an electric ignition system that requires 12 Volt DC to operate. The house disconnect switch must be ON to supply power to ignition module. The cooktop should be used for cooking purposes only, not as a heating source. When the burner valve is opened the fuel source flows through the valve into the mixture tube. The fuel passes by a hole or venturi in the mixture tube, which draws air in with the fuel for a proper fuel/air ratio. The flame should have a blue appearance with a lighter blue defined flame at the burner head. A yellow flame or yellow flame tips indicate a rich fuel mixture, which can leave a black color or carbon on the bottom of the cookware. To conserve LP-Gas energy, preheat the pans only when recommended and shorten the cooking time by using the least amount of water possible. When cooking, heat the food on a higher heat setting, and then turn the heat down to finish cooking.

**The cooktop will operate under the following conditions:**

1. The primary LP-Gas valve on the LP tank is open.
2. The battery cut-off switch is ON.

**Surface Burners:**

The surface burners have an independent heat rating. The ratings for the burners used are 7,000 BTU's and 10,000 BTU's. The smaller rated burner (left burner) should be used for simmering or smaller quantities of food in small cookware. The larger rated burner (right burner) should be used for deep-frying, large quantities of food and large cookware. The amount of heat produced is controlled at the control panel. The flames at the surface burners should have an even appearance at the burner base. Uneven flames may indicate the need to clean the burners.

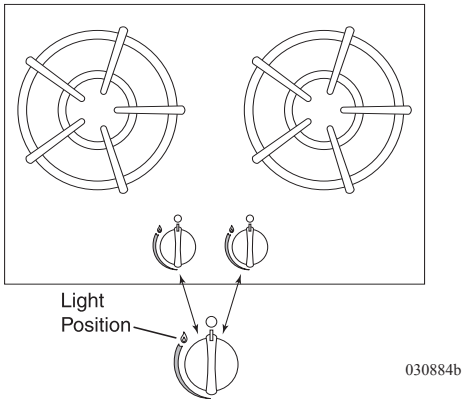


**WARNING: Do not leave burner valve(s) open while burner(s) are not lit. LP-Gas is heavier than air and will settle on the floor and "hide" in corners. If you smell gas, extinguish all open flames and turn off the main gas supply. Liquid propane is highly volatile, highly explosive and extremely dangerous. Explosion, fire, property damage, injury or death can result. Open all windows and doors. Do not touch any electrical switches. They may cause a spark that can ignite. Evacuate the motorhome and shut off the primary LP valve. Contact a qualified service center to have the problem correctly diagnosed and repaired before operation.**

**Using the Cooktop:**

Place the cookware on the burner grate over the desired surface burner first. Depress control knob slightly and turn counterclockwise to the spark position. Push control knob down firmly until burner stays lit (approximately 5 seconds). Once the burner lights, rotate the knob to the desired cooking setting. In the unlikely event of a power outage or igniter failure, the cooktop can be lit manually.

**WARNING: Do not leave burners unattended during cooking.**

**WARNING: Do not the heat motorhome interior with the cooktop or oven. Gas combustion consumes oxygen inside the motorhome. Carbon Monoxide is an odorless, colorless and highly poisonous gas.**

**Tips:**

1. A yellow flame is an indicator of incorrect fuel/air ratio. Lowered BTU output and carbon build up can occur.
2. When cooking at an altitude above 5,000 feet, the flame may change appearance and the flame BTU output will be lowered. Allow extra cooking time.
3. Do not allow the tips of the flame to extend beyond pan or pot edge. When this occurs, heat is wasted and possibility of injury increases.
4. Cooking time can be reduced if the least amount of liquid is used. The choice of cookware selected can make a big difference.

**Care and Cleaning:**

Regular cleaning with a soft cloth and a warm detergent solution is generally enough to keep the cooktop clean. Wash, rinse and dry with a soft cloth. Thoroughly clean the cooktop when it is cool. Use a dry cloth or paper towel while the surface is warm to the touch to clean splatters or spills. Cleaning will be more difficult if spills bake on to the surface. Glass cleaner sprayed on a paper towel should be used for the cooktop surface. DO NOT spray glass cleaner directly on the surface. DO NOT use abrasive cleaners or steel wool. Harsh cleanser like bleach, ammonia and oven cleaner should NEVER be used. The surface burner grate and caps should be cleaned using the same guidelines as the cooktop surface.

## COOKTOP WITH OVEN (OPTIONAL)

The cooktop range/oven is operated and maintained the same as the cooktop only with an oven. This option allows for a wider variety in floor plans and provides more storage space.

- The oven may be used with the cooktop cover down.
- Push in the oven control knob and rotate counterclockwise to PILOT ON.
- Light the oven pilot located near the back of the oven, under the broiler shelf and to the left of the oven burner.
- Set the oven control knob to PILOT ON to maintain pilot flame. The oven and broiler are now ready for operation. The oven pilot has been factory set and requires no further adjustment.
- To extinguish the oven pilot push in the oven control knob and rotate clockwise to OFF.

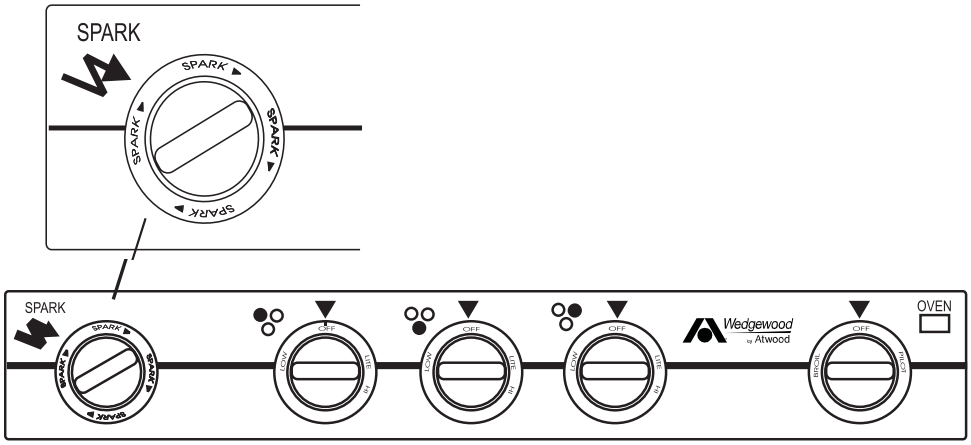


030828

**WARNING: Extinguish all pilots when refueling or traveling. Do not block vents in oven with cookware or other objects.**

## WALL THERMOSTAT

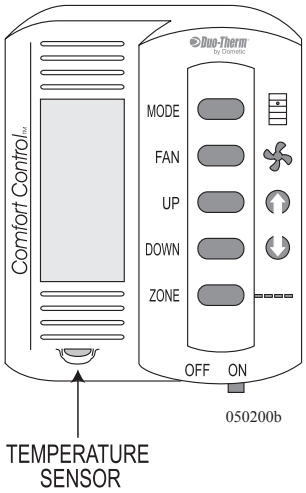


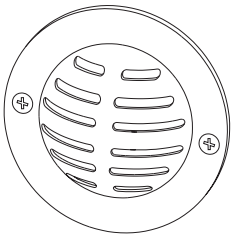


One comfort control operates the HVAC (Heating, Ventilating and Air Conditioning) system. The comfort control is located in the hallway on the monitor panel. The comfort control will operate roof air conditioner functions and LP-Gas furnace operation. The comfort control uses a liquid crystal display to show the current mode status.

There are five different functions of the HVAC system: OFF, FAN, COOL, HEAT PUMP (Optional) and FURNACE. These are selected by repeat pressing of the MODE button. The FAN button controls the fan speed of the roof air conditioner. Two speeds are available: Low and High. Fan speed control applies only to the blower speed of the roof air conditioner. Selecting the fan speed Auto adjusts the fan speed automatically, depending on temperature set point and actual temperature in a selected zone.

The motorhome is divided into two operating Zones, the living room and the bedroom. The living room is Zone One. The bedroom is Zone Two. The comfort control must be in Zone 1 for the furnace to operate. Press the Zone button to change zones. The selected zone will flash. The UP or DOWN buttons control the temperature in any mode.

**NOTE: The Comfort Control must be ON to operate any HVAC function. Do not select conflicting modes of operation. One zone cannot be on COOL while another zone is set to FURNACE.**

**NOTE: The motorhome will not heat or cool faster by selecting a very high or very low temperature setting.**

## AIR CONDITIONER - ROOF

The roof air conditioners operate from 120 Volts AC only, by shore power or the generator. Operations are controlled by the 12 Volt DC comfort control. The electronics in the comfort control use a telephone style patch cord to send low voltage signals to the roof air conditioner's circuit board. The circuit board controls the desired roof air functions and furnace operation. The refrigeration operation principle of the roof air conditioner is the same as the dash air conditioner or a household type refrigerator, functioning as an enclosed system. The compressor pumps refrigerant into a condenser as high-pressure vapor. A condenser expels heat from the vapor into the atmosphere. Vapor condenses to high-pressure liquid. The liquid is forced through a metered capillary tube and then into the evaporator or low side pressure. The refrigerant changes from liquid to vapor as the refrigerant extracts heat. The compressor pumps the vapor to the condenser repeating the cycle.

Operating the air conditioner in HEAT PUMP (Optional) mode reverses the cycle. Reversing the refrigerant flow blows heated air into the interior of the motorhome. There are ambient temperature operating limitations in HEAT PUMP mode.

**NOTE: The air conditioning system freezes moisture in the air. It is recommended to set the blower fan speed to high when operating in high humidity.**

## Operating Instructions

**Roof air conditioner operates only when following needs are met.**

- 120 Volts AC, from either shore power or the generator, is supplied.
- The battery cut-off switch is in the **ON** position and house batteries are charged.

**Fan Operation:**

Circulates the interior air by using the roof air conditioner blower. The fan speed controls the roof air conditioner blower speed in the following modes: **FAN**, **COOL** or **HEAT PUMP (Optional)**.

- Press the **MODE** button repeatedly until **FAN** is displayed.
- Press the **FAN** button to select the desired fan speed.

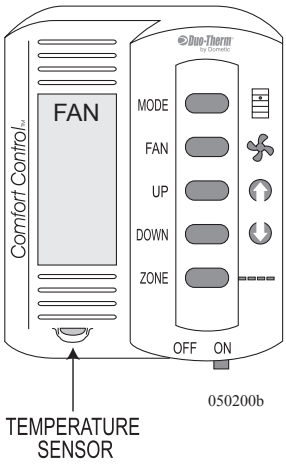


**Air Conditioner Operation:**

- Press the **ZONE** button to select Zone 1 (front roof A/C) or Zone 2 (rear roof A/C).
- Press the **MODE** button repeatedly until **COOL** is displayed.
- Set desired fan speed by pressing the **FAN** button.
- Set desired cooling temperature by pressing the **UP** or **DOWN** buttons.

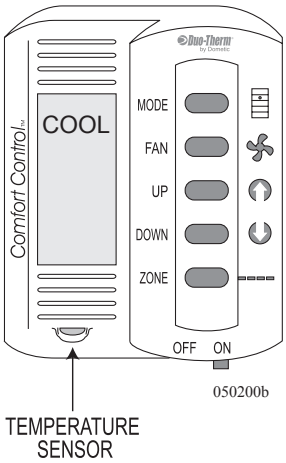


**NOTE: The compressor will engage approximately two minutes after blower motor activation. This prevents accidental compressor activation against high pressure.**

## *Heat Pump (Optional)*

The Heat Pump mode supplies heat by using the air conditioner. The air conditioning principle is reversed, supplying heated air to the ceiling registers instead of refrigerated air. There are ambient temperature limitations of Heat Pump mode.

**NOTE: The roof air conditioner will not operate in HEAT PUMP mode with ambient temperatures at or below 30º F.**

If the Heat Pump mode is selected at or below 30° F., or if operating in Heat Pump mode and temperature drops to 30º F., the air conditioner will stop Heat Pump operation and **AUX HEAT** will be displayed. The furnace will be selected as the auxiliary heat source and will begin operation. The furnace will remain the primary heat source until ambient temperature rises above 42º F. When ambient temperature is between 30 to 42º F., a defrost cycle is initiated approximately every 40 minutes of compressor operation. The blower motor will stop for five minutes and **DEFROST** will be displayed. After the defrost cycle the Heat Pump operation will resume.

**Heat Pump Operation:**

- Battery cut-off switch must be in the **ON** position.
- Slide the **ON/OFF** switch to the **ON** position.
- Press the **MODE** button repeatedly until **HEAT PUMP** is displayed.
- Set desired fan speed by pressing the **FAN** button.
- Press the **UP** or **DOWN** buttons to set desired heating temperature.
- Select Zone 1 or Zone 2, using the **MODE** button.

## Return Air Filters

Clean the return air filters frequently. They are located inside the motorhome behind the intake vent covers. Firmly grasp the leading edge and push back on both tabs. Never run the air conditioner without the return air filters in place. Dust and other particles will plug the evaporator core and substantially reduce the performance of the air conditioners.

**To Clean:**

- Wash filters in warm soapy water. Do not use solvents.
- Rinse filters thoroughly with fresh water. Allow them to dry.
- Install filters and secure the covers.

## FURNACE

The furnace and related components are 12 Volt DC operated, using LP-Gas as the fuel source. Electronic circuitry (automatic ignition) is used to ignite the burner. The furnace uses outside air for the burner combustion and exhaust is expelled through the outside vent. Inside air is drawn into the furnace and blown across the internal heat exchanger. Heated air is then discharged through ducted hoses which can be run throughout the motorhome.

**CAUTION: Do not store any items/materials in furnace area. Restricted air flow may hamper furnace operation leading to failure and/or fire hazard.**

**WARNING: IF YOU SMELL GAS extinguish all open flames and turn off the main gas supply. Liquid propane is a highly volatile, extremely dangerous gas. It can explode or ignite, which may result in property damage, injury or death. Propane is "heavy" and can "float" on the floor or "hide" in corners. Open all windows and doors. Do not touch electrical switches. They may spark, which can ignite. Keep all open flames, spark producing devices and smoking material out of the area. Contact a qualified service center to have the problem correctly diagnosed and repaired before resuming operation.**

## Operating Instructions

The furnace operates in the following manner: The wall thermostat sends a signal to the front roof air conditioner circuit board, which closes a relay. Closing a relay sends an electrical signal to the furnace to begin the ignition cycle. There is a small time delay before the blower motor begins. Once the blower motor attains a predetermined speed it will close the sail switch. The sail switch, which is now closed, sends the electrical signal through a high temperature protection switch, then to the automatic ignition circuit board. After the thermostat is satisfied, the gas valve closes and extinguishes the burner. The blower motor stops approximately two or three minutes after cool down.

**The furnace will operate when the following conditions have been met.**

1. The LP-Gas primary valve on the LP tank is open and the LP-Gas valve at furnace is on.
2. The house batteries in the motorhome are fully charged.

**NOTE: The automatic ignition circuit board will attempt to light the burner three times before the ignition board will go into "lock-out." If the burner does not light, the furnace blower motor will continue to run and the wall thermostat will have to be cycled off.**

## Using the Furnace

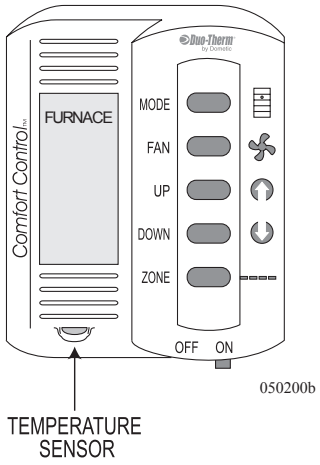


- Slide the **ON/OFF** switch (on hallway thermostat) to the **ON** position.
- Press the **ZONE** button to select Zone 1
- Select the **FURNACE** mode on the Comfort Control using the **MODE** button.
- Select the desired temperature using the **UP** and **DOWN** arrow buttons.

## Tips

- After storage the furnace may produce a musty smell during the first couple of cycles.
- Operating the furnace at an altitude above 5,000 feet reduces the BTU output due to air/fuel ratio.
- The furnace will periodically need to be serviced by a qualified technician. If the furnace exhibits unusual symptoms or noises, or has an unusual odor when operating, have the furnace checked or serviced.
- If the blower fails to operate after verifying the batteries are charged and fuses are good, use a coin or screwdriver to open outside access door. Make sure the power switch is on and circuit breaker is pushed in.

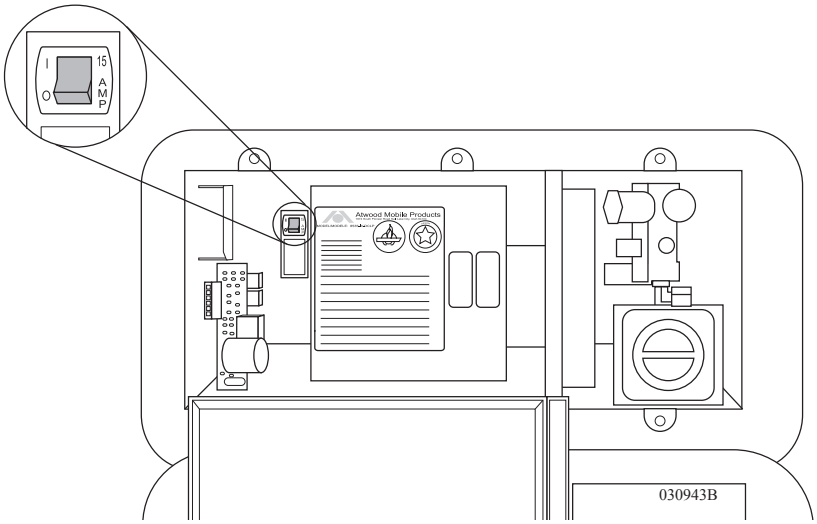


**CAUTION: It is not advisable to use the furnace to heat the inside of the motorhome during transit.**

**NOTE: When washing the exterior of the motorhome, avoid a direct stream of water into the outside furnace vents. This can cause damage to the furnace.**

## If the Furnace Fails to Light

If the furnace fails to light make sure the LP-Gas primary supply valves are open and the LP-Gas switch is turned on. The furnace will not light if the blower motor is not spinning to its specified speed. This may be due to a low house battery charge condition.

**To Charge the House Batteries:**

1. Hook-up to shore power.
2. Start the generator.
3. Start the main engine to charge the batteries.

**WARNING: If you smell gas and the blower motor is spinning do not attempt additional furnace operation as this may result in an explosion, fire or personal injury. Contact a qualified technician.**

## FIREPLACE - ELECTRIC (OPTIONAL)

The fireplace operates on 120 Volt AC supplied by either shore power or LP Genset generator. The fireplace will produce heat from lamps located inside the fireplace. When the fireplace is first used, it may emit a slight, harmless odor. This odor is a normal condition caused by the initial heating of internal heater parts and will not occur again.

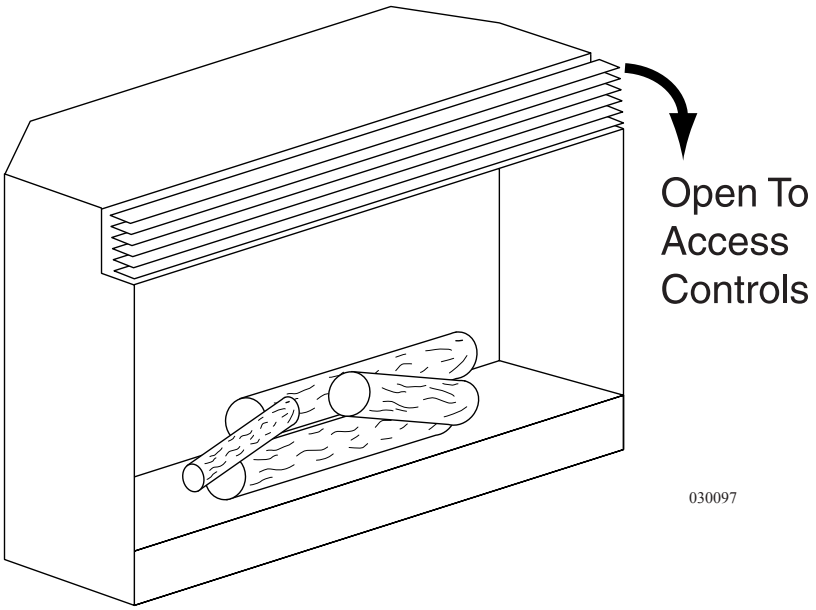


When using the fireplace, basic rules should be followed to reduce the risk of fire, electrical shock and injury to persons, including the following:

- Read all instructions before using the fireplace.
- The fireplace is hot when in use. To avoid burns, do not let skin touch hot surfaces. The grill directly in front of the heater outlet becomes hot during heating operation. Keep combustible materials, such as furniture, pillows, bedding, paper, cloth and curtains at least 3 feet (0.0m) from the front of the unit.
- Extreme caution is necessary when any heater is used near children or a person suffering a disability and when the fireplace is operating unattended.
- Do not insert or allow foreign objects to enter any ventilation or exhaust opening as this may cause an electric shock or fire, or damage the heater.
- To prevent a possible fire, do not block air intake or exhaust in any manner.
- All electrical heaters have hot and arcing or sparking parts inside. Do not store gasoline, paint, or flammable liquids where the unit will be exposed to flammable vapors.

- Do not modify this fireplace. Use it only as described in this manual. Any other use not recommended by the manufacturer may cause fire, electric shock or injury to persons.
- Do not burn wood or other materials in the fireplace.
- Do not strike fireplace glass.
- Always disconnect power before performing fireplace cleaning or maintenance.

## Operation

The following will explain the function of each convenient control. To access the controls, open the upper grill by pulling, near the top, forward and down. To conceal controls during operation, return the grill to its original upright position.

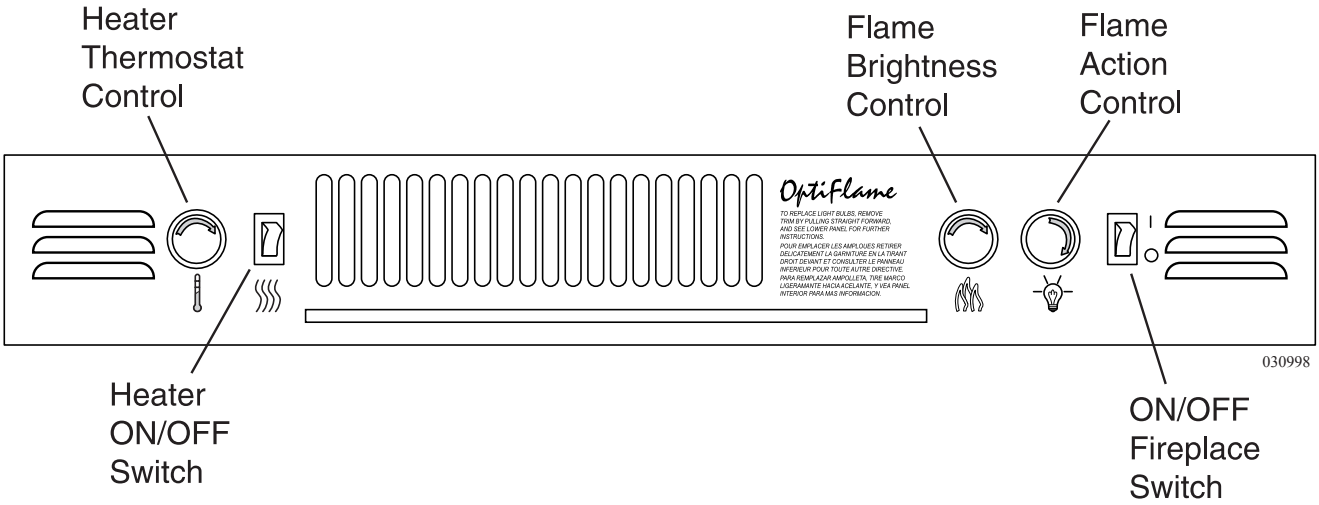


**MAIN ON/OFF SWITCH:**
The ON/OFF switch supplies power to all fireplace functions (Heater/Flame).

**Resetting the Temperature Cutoff Switch:**
This unit is equipped with a thermostat to control temperature of the room by turning the heater on and off. The heater is protected with a safety device to prevent overheating. Should the heater overheat, an automatic cut out will turn the heater off. Reset by switching the ON/OFF switch to OFF and waiting 5 minutes before switching the unit back ON.

**CAUTION: If you need to continuously reset the heater call your local dealer.**

**FLAME ACTION CONTROL:**
Turn the flame action control knob to adjust the flame speed to desired level.

**FLAME BRIGHTNESS CONTROL:**
Turn the flame brightness control knob to increase or decrease the brightness of the flame and embers.

**HEATER ON/OFF SWITCH:**
The heater ON/OFF switch supplies power to the heating unit when main ON/OFF switch is ON.

**HEATER THERMOSTAT CONTROL:**
To adjust the temperature to individual requirements, turn the thermostat control clockwise all the way to turn on the heater. When the room reaches the desired temperature, turn the thermostat knob counterclockwise until you hear a click. Leave in this position to maintain the room temperature at its setting.

For additional heat, turn clockwise until you hear the click again and the heater will turn ON. To turn the heater OFF, rotate the knob fully counterclockwise.

## *Maintenance*

Light bulbs need to be replaced when you notice a dark section of the flame or when the clarity and detail of the log exterior disappears. There are two bulbs at the top of the opening which illuminate the log set exterior, and four bulbs under the log set which generate the fames and embers.

**WARNING: Turn OFF circuit beaker before attempting any maintenance or cleaning to reduce the risk of fire, electric shock or damage to persons.**

**NOTE: Allow at least 5 minutes for light bulbs to cool off before touching bulbs to avoid accidental burning of the skin.**

**To Open the Light Bulb Area:**
- Remove the rim by pulling straight forward.
- Hold glass in place while removing retaining top clip.
- Lift glass out and store in a safe place.

**CAUTION: Even though the glass is safety glass it may break if bumped, struck or dropped. Care must be taken when handling the glass.**

**Helpful Hints:**

It is a good idea to replace all light bulbs at one time if they are close to the end of their rated life. Group replacement will reduce the number of times you need to open the unit to replace light bulbs.

**To Replace the Bottom Light Bulbs Which Generate the Flames and Embers:**

Bulb requirements: Quantity of 4 clear chandelier or candelabra bulbs with an E-12 (small) socket base, 60 watt rating. Example GE 60BC or Phillips 60 CTC. **Do NOT exceed 60 watts per bulb.**

- Lift up front edge of log until it clears the front tabs. Pull out until the rear tab clears the back ledge, then lift out.
- Examine the bulbs to determine which bulbs requirereplacement.
- Hold the socket while unscrewing the bulb.
- Hold the socket while screwing in the new bulb.
- Replace the log by pushing it down and in until it rests against the mirror.

**To Replace the Top Bulbs Which Illuminate the Log Exterior:**

Bulb requirements: Quantity of 2 clear chandelier or candelabra bulbs with an E-12 (small) screw base. Please refer to the label adjacent to the upper lights for the correct wattage for your model. **Do NOT exceed 15 watts per bulb.**

- Examine the bulbs to determine if they need replacing.
- Hold the socket while unscrewing the bulb.
- Hold the socket while screwing in the new bulb.

**To Reassemble Light Bulb Area:**

- Replace the glass and hold it in place at top.
- Fasten retaining clip to hold glass in place.

**Glass Cleaning:**

The glass is cleaned in the factory during the assembly operation. During shipment, installation, handling, etc., the glass surface may collect dust particles; these can be removed by buffing lightly with a clean dry cloth.

To remove finger prints or other marks, the glass can be cleaned with a damp cloth using a good quality household glass cleaner. The glass should be completely dried with a lint free cloth or paper towel. Wait until it is time to change the light bulbs to clean inside glass surface.

**CAUTION: Do not use abrasive cleaner on glass surface or spray liquids directly onto any surface.**

## WATER HEATER

The water heater uses two different methods to heat water: (**1**) 120 Volt AC, supplied either by shore power or the on board generator (**2**) LP-Gas. The 120 Volt AC uses a heating element similar to the type used in a house water heater. The 120 Volt AC method is efficient if shore power is available. An automatic ignition circuit board, operated by 12 Volt DC, controls the LP-Gas. Two thermostats control water temperature: One for the 120 Volt and the other for the LP-Gas. The thermostat temperatures are preset by the water heater manufacturer and are not adjustable.

Water is pumped into the bottom of the water heater tank where it is heated and discharged out of the top upon use. For ease of draining the tank during winterization, the water heater is equipped with a pressure-temperature valve, bypass valve and drain plug.

**NOTE: Do not operate the water heater without water in the water heater tank. Damage to the thermostats and electric heating element can occur.**

**NOTE: It is not fuel efficient to use the generator to operate the water heater on 120 Volt AC.**

### *Before Using the Water Heater*

Before using the water heater, purge all trapped air from the water system and water heater.

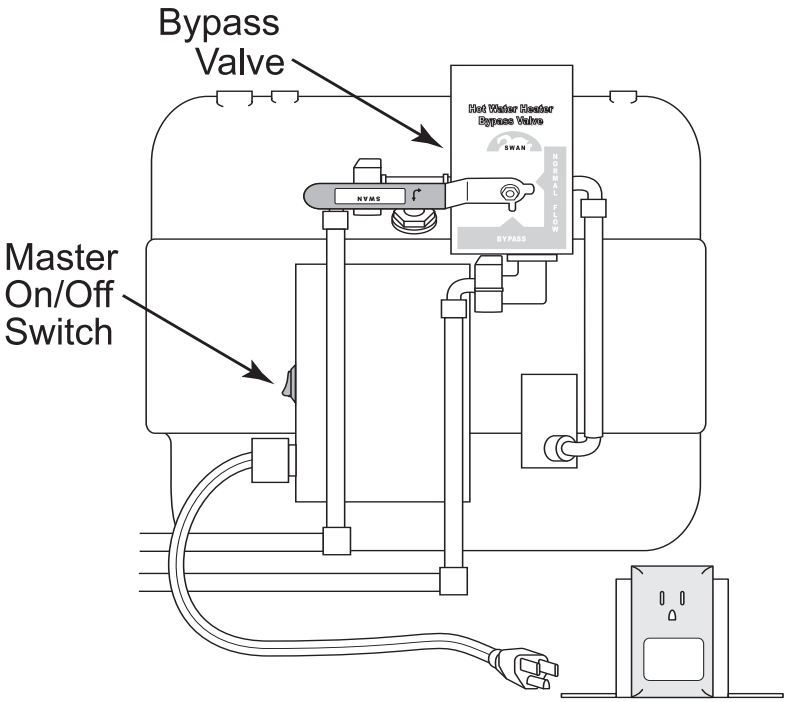


040405C

**To Purge the Air and Pressurize the System:**

- Remove the access panel to the back of the water heater.
- Turn the water heater Bypass Valve (located at the back of the water heater) to Normal Flow. If necessary replace drain plug.
- Fill the fresh water tank or hook to city water.
- Turn on the water pump or city water.
- Turn on the hot and cold valves for each faucet, one at a time. Operate each faucet, inside and outside the motorhome, until a steady stream of water with no air bubbles or air pockets are present. Do not operate the water heater until the water system is purged of air.
- After the system pressurizes, inspect the water heater and water system for leaks.

**CAUTION: After purging the water lines and water heater, air may still be present. Use caution upon opening a hot water faucet after the first heat cycle of the water heater.**

**WARNING: IF YOU SMELL GAS extinguish all open flames and turn off the primary LP-Gas valve. Do not touch any electrical switches. They may cause a spark that can ignite. Open all windows and doors. Evacuate the motorhome. Propane is a "heavy" gas and will lay on the floor and "hide" in corners. Liquid propane is highly volatile, explosive and extremely dangerous. Explosion, fire, property damage, injury or death can result. Contact a qualified service center to have the problem correctly diagnosed and repaired before resuming operation.**

## *Operation*

**Water Heater Operation:**

- Turn on the battery cut-off switch at the entry door.
- 120 Volt AC is supplied from shore power or the generator.
- The house batteries are charged.
- The primary LP-Gas valve on the LP tank is open.
- Turn on the Master On/Off switch. located on the back of the water heater.

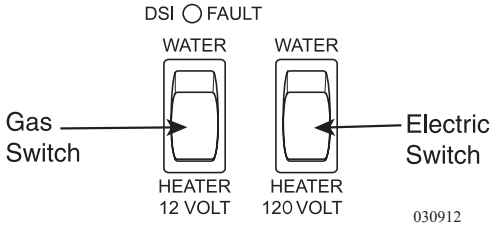


*Switches on Monitor Panel.*

**Heating Water with 120 Volt AC:**

- Have either shore power (preferable) or the generator supplying AC voltage.
- Turn on the Water Heater 120 V switch.

**Heating Water with LP-Gas:**

- Make sure the primary LP-Gas valve is open and the electric LP valve is on.
- Turn on the water heater 12 V switch. The indicator light on the switch will illuminate briefly then go out when the burner ignites. The burner will make an audible "roar" when lit.
- The automatic ignition circuit board will attempt three ignition cycles to light the burner. If the burner does not light after the third attempt, the circuit board will "lock-out" and the indicator light on the switch will glow steady.
- Check the level of LP-Gas in the tank and make sure the primary LP-Gas valve is on. Cycle the LP switch Off then back On to reset the ignition board.

**NOTE: The LP-Gas and AC electric functions may be on at the same time. This will speed the recovery process of heating water for large volume use.**

**CAUTION: It is recommended not to operate the water heater on LP-Gas while the motorhome is in transit. Be sure the water heater is off before refueling.**

**WARNING: Before beginning any service or work on the water heater make sure the LP-Gas is turned off, the 120 Volt AC source has been disconnected and the 12 Volt DC source has been disconnected. Failure to do so can result in explosion, fire or injury.**

**Indicator Lamp:**

- Illuminates briefly when the LP switch is turned on, ignition occurs and the lamp goes out.
- If the burner does not light within 6 to 9 seconds the ignition board will attempt two more ignition cycles. If the burner does not light after the third attempt, the indicator lamp glows steady.

## *Ignition Module Function*

**The ignition module will perform the following sequence:**

1. The module has a timing circuit, which allows 6 to 9 seconds for ignition to occur.
2. Initially the module supplies current to the gas valve. At the same time, it produces a high-voltage current supply to the electrode to produce a spark at mixture tube.
3. Upon ignition, the electrode senses the presence of flame.
4. If ignition does not occur, the module will wait 20 to 40 seconds before the next ignition cycle.

## Thermostats

Separate thermostats are used for LP-Gas and AC electric. The thermostat controls the power to the module board. At 130° F, the thermostat will open, extinguishing the burner. If the thermostat fails, a High Temperature safety limit switch will open. The safety switch will require manual reset.

**CAUTION: If the High Temperature safety limit should open, discontinue using the water heater. Have the water heater inspected by a qualified technician to determine the cause of the over temperature condition.**

## Water Heater Bypass

The bypass valve is located at the back of the water heater. Turning the valve to **BYPASS** stops water from entering the cold water inlet of the water heater. Turn the valve to **BYPASS** when winterizing. For normal operation, turn valve so that handle points to **NORMAL FLOW**.

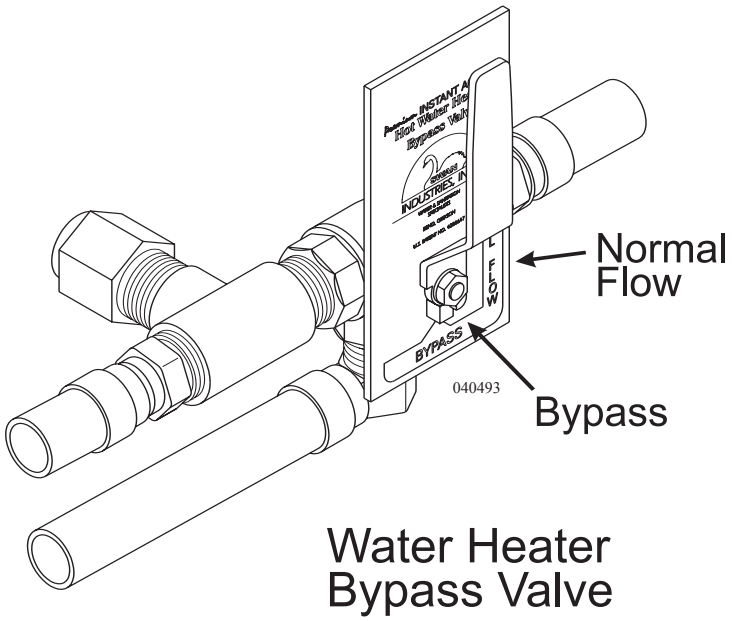

## Pressure Temperature Relief Valve

The water heater is equipped with a Pressure-Temperature relief valve. The water heater may discharge from the Pressure-Temperature relief valve during the heating cycle due to thermal expansion of water. The Pressure-Temperature relief valve is designed to open if the water temperature in the tank reaches 210° F (98.8° C), or if internal pressure reaches 150 psi. A small discharge is normal and is not necessarily a faulty valve. The water heater has an internal air pocket to reduce the possibility of dripping or weeping.

Eventually, the expansion of the water will absorb the air pocket. When this occurs, the air pocket will have to be replaced utilizing the following procedure.

**CAUTION: Ensure the water heater tank is cool prior to making any check of the valve.**

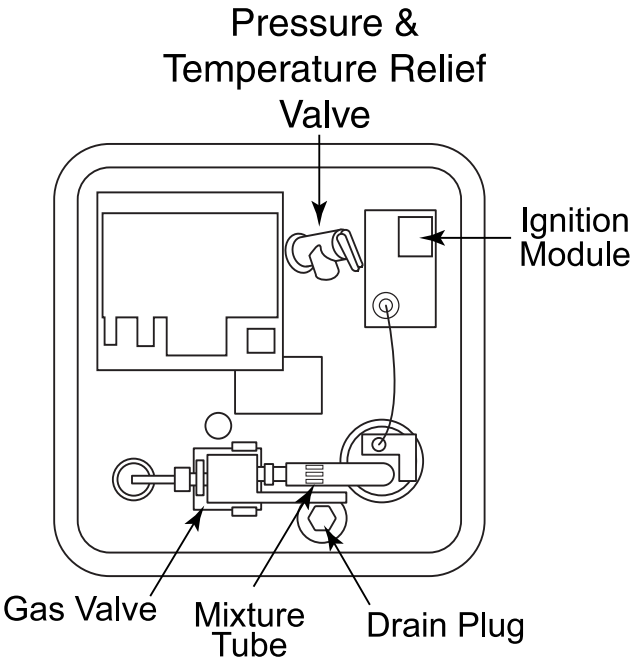


040424C

**Re-establishing the Air Pocket:**

Step 1: Turn OFF the water heater.

Step 2: Shut OFF the incoming water supply.

Step 3: Open the hot water faucet closest to the water heater.

Step 4: Pull the handle of the relief valve until the flow of water stops.

Step 5: Close the relief valve allowing it to snap shut. Close the hot faucet and turn ON the water supply.

Step 6: Turn ON the water heater.

The air pocket is re-established and the process does not need to be repeated until the next discharge of water from the P & T valve. If the discharge does not stop, contact a qualified service center to evaluate the valve and make any required repairs.

## Burner Compartment

Periodically check the outside service compartment and screen (in the door) for foreign material the can accumulate and prevent the flow of combustion and ventilating air.

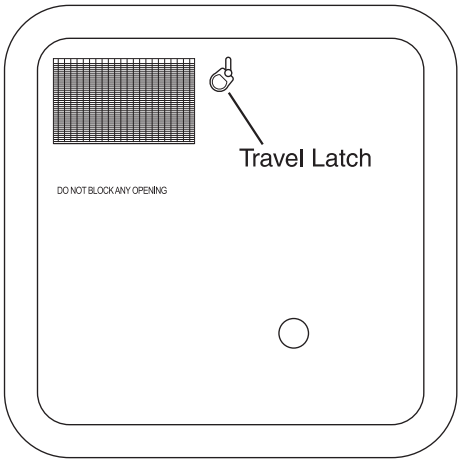


010720B

## Tips

- To conserve LP-Gas, turn off the water heater when not in use.
- When using the shower, conserve energy and hot water by shutting the shower water off when not in use.
- Use caution when hooked to anything less than 50 Amp shore service. When the water heater element is in operation it will use approximately 12 AC Amps. Appliances will need to be operated in sequence to avoid tripping a breaker.
- Water may drip occasionally from the Pressure - Temperature relief valve until the pressure has dropped. Avoid opening the P & T valve manually as collected minerals may cause the valve to leak continually. The valves can be purchased from most hardware stores.
- Operate the water heater using LP-Gas when hooked to 30 Amp shore power. This will reduce the likelihood of tripping the shore power breaker.

## Draining & Storage

If the motorhome is to be stored during the winter months, drain the water heater to prevent freeze damage.

1. Turn off electrical power to the water heater.
2. Shut off the primary LP-Gas valve.
3. Open low point drains.
4. Open both **HOT** and **COLD** on all faucets.
5. Remove water heater drain plug.
6. Turn the Bypass lever to **BYPASS**.

**NOTE: Be sure to refill the water heater with water before resuming operation.**

**Troubleshooting:**

- If water heater fails to light check the mixture tube for obstructions. Spiders may make nests in the burner tube. It is recommended to clean the burner tube with a brush and not compressed air. Compressed air may not fully remove the obstruction.
- If the indicator light on the switch does not light, and the water heater does not light, ensure the house power switch at the entry door is on or check for a blown fuse in the house distribution panel.
- If the water heater fails to operate after checking the fuses, the High Temperature safety limit switch may be tripped. Have a qualified technician inspect the water heater.

## WASHER-DRYER PREPARED (OPTIONAL)

If the motorhome comes without the optional washer-dryer, it will have a washer-dryer preparation package installed from the factory. The washer-dryer "prep" package includes the following items:

- Two color coded water supply lines. A red line for hot; a blue line for cold.
- A 1½ in. waste water drain line with threaded cap, P-trap, and an automatic vent cap. This will drain the waste water into the grey water holding tank.
- A 120 Volt receptacle located in the compartment.

**NOTE: Sidewall dryer vents are not part of the prep package. If a sidewall vent is to be installed, properly seal vent to sidewall.**

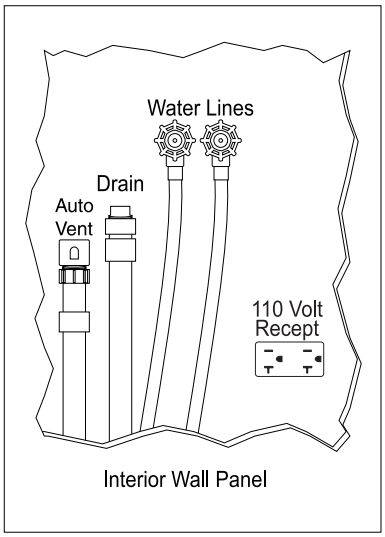


Location of specified parts may vary within wall panel depending on floor plan and model.

040495

If a washer-dryer is to be installed at a later date, follow all the manufacturer installation instructions. Listed here are further instructions which should be adhered to for safe and reliable operation:

- Do not connect the clothes dryer exhaust duct to any other duct, vent or chimney.
- Do not terminate the exhaust duct beneath the motorhome.
- Use proper length fastener when attaching exhaust vent to exterior sidewall. Stainless steel fasteners are best suited for this as they will not rust.
- If the cabinet or closet in which a washer-dryer is installed does not have vented louvered doors, the manufacturer's installation instructions may require installation of vented doors or vents to be installed in the doors. This is for sufficient circulation of drying.

## WASHER - DRYER (OPTIONAL)

The automatic washer-dryer has a capacity of up to 12 lbs. of dry clothing. It is front loading with an extra large door opening for easier access. Several wash and dry programs are available along with variable water temperature settings.

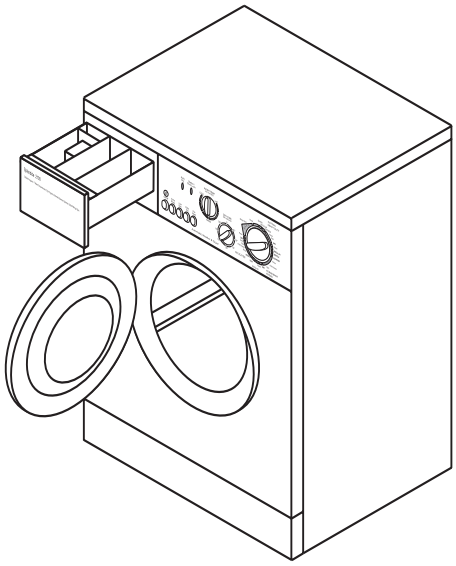


- The washer-dryer operates on 120 Volt AC from shore power or the generator.
- The washer-dryer will use approximately 12 to 20 gallons of water per wash cycle.

**INFO: The washer-dryer has many features. Refer to the manufacturer's manual in the owner's information file for detailed operating instructions.**

**WARNING: Open a window or vent while operating the dryer. The washer-dryer can create negative air pressure inside the motorhome that can accumulate Carbon Monoxide or LP-Gas while operating fuel-burning appliances.**

**CAUTION: Do not use the washer-dryer while traveling. Suspension movement, combined with the weight of the drum while in the wash cycle, can damage the internal components of the washer-dryer.**

Before using the washer for the first time, after winter storage or a long period of non-use, it is a good idea to conduct this simple test procedure prior to loading the machine for use. This procedure will verify all the hardware and electronic components are functioning properly. Wipe the inside and outside with a damp cloth to remove any travel dust that has accumulated.

**NOTE: Perform this test before putting the washer-dryer in use for the first time or after the winter months. This will clear the water lines and drum of winterization antifreeze.**

### *Test Procedure*

**Test Procedure Requirements:**

- Make sure water lines are secure and any water valves are open.
- Hook to city water or turn on the water pump.
- Hook to shore power or start the generator.

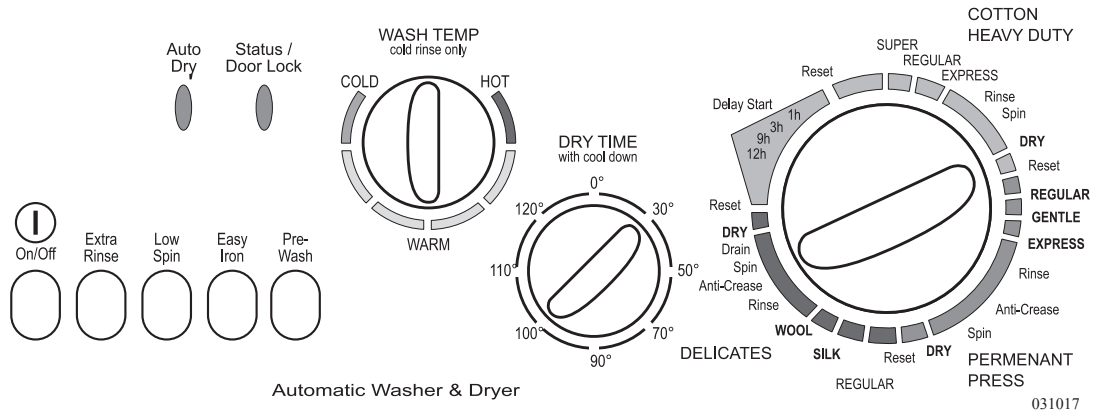


Automatic Washer & Dryer

**To Conduct the Test Procedure:**

1. Set the selector knob to **Reset**.
2. Set the **Dry Timer** knob to 30 minutes. Push the **On/Off** button to **On**. Wait five seconds. The **Auto Dry** light should be on and the **Status** light flashes fast then slow.
3. Set the selector knob to a wash cycle. Set **Wash Temp** knob to **Warm**. Water should be flowing into washer and drum should rotate both directions.
4. Set the selector knob to **Reset**. Wait five seconds.
5. Set the selector knob to **Spin**. Water should drain and drum rotation should speed up.
6. Set the selector knob to **Reset**. Wait five seconds.
7. Set the selector knob to **Dry**. Dryer fan should begin and drum should rotate both directions.
8. Set the selector knob to **Reset**. Wait five seconds.
9. Set the **Dry Time** knob to zero. The **Auto Dry** light should go off.
10. The door will unlock in two minutes or less. The **Status** light flashes fast then slow. The door should now open.
11. Push the **On/Off** button to **Out** (Off) position. The **Status** light should be off.

**WARNING: Do not wash or dry articles that have previously been cleaned, washed, soaked or spotted with gasoline, dry cleaning solvents or other flammable or explosive substances. They give off vapors that could ignite or explode. Do not add gasoline, dry cleaning solvents or other flammable or explosive substances to the wash water. Do not use heat to dry articles containing foam rubber or similar textured, rubber-like materials.**

**To begin a wash load:**

- Sort and pre-treat clothes.
- Add the measured amount of detergent suggested by the package directions (maximum two tablespoons).
- Load the clothes loosely into the washer. Close the washer door.
- Turn the Wash Temperature knob to the desired temperature setting.
- Choose the desired washing cycle option using the Selector knob.
- Load wash tray with detergent.
- Turn the power ON.
- After the cycle is complete, wait two minutes for the door lock to release before attempting to open the door.

## Washer-Dryer Maintenance

Occasionally wipe the exterior cabinet of the washer-dryer with a damp cloth or sponge. Wipe dry with a soft cloth. Do not use polish on plastic trim. In areas of hard water, detergent can accumulate in the drum. Obtain a packaged water softener. Add quantity as specified by the manufacturer directly to the drum. Run the washer through a complete cycle using hot water. Repeat the process if necessary. Remove hard water deposits using only cleaners labeled as washer safe. Wipe the inside of the washer-dryer door with a soft cloth to remove any moisture. Periodically apply a thin coat of paste wax to the inner door, especially to the area that is immediately next to the door window. This will protect the door finish from laundry spills and discoloration.

If water flow to the washer-dryer is reduced, the Hot and Cold water inlet screens may be clogged. Remove water pressure and undo water lines at the back of the washer-dryer. Use tweezers or pliers to remove screens from fittings. Clean and install screens and water lines. Hook to city water or turn on the water pump. Check for water leaks before using the washer-dryer.

**NOTE: Should the washer-dryer need removal for service, care should be taken as the washer-dryer weighs approximately 170 lbs. Proper accommodations should be made to avoid risk of injury or damage to the cabinetry.**

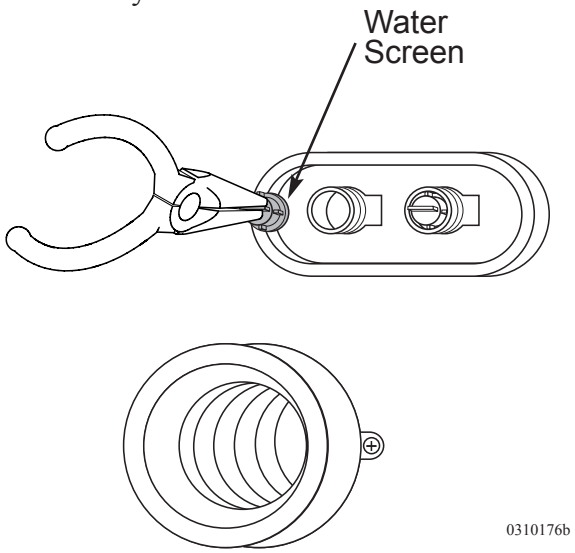

## *Winterizing the Washer-Dryer*

**To Winterize the Washer Dryer with Air Pressure:**

1. Hook an airline (regulated to 45 psi or less) to the water inlet of the motorhome.
2. Rotate Selector knob to a wash position with the Wash Temp setting on Warm. Press the power button to On. Air pressure will clear the Hot and Cold water lines.
3. After water lines are clear, rotate Selector knob to Spin. Allow the pump to drain the drum.
4. Set Selector knob to reset and Timer to zero. The door will unlock in two minutes or less. Open door and pour in ¼ gallon of RV antifreeze.
5. Set Selector knob to Spin. The pump will prime with antifreeze. Set selector knob to Reset and turn the power off.

**To Winterize the Washer Dryer Using RV Antifreeze:**

Two methods of introducing antifreeze to the water system can be used. Add antifreeze directly to the water tank or use a separate container of antifreeze with water line hooked to the intake side of the water pump.

1. Turn on the Water Pump. Rotate Selector knob to a wash position with the Wash Temp setting on Warm. Press the power button to On. Allow antifreeze to enter the drum.
2. After water lines are filled with antifreeze, rotate Selector knob to Spin. Allow the pump to drain the drum.
3. Set Selector knob to reset and Timer to zero. The door will unlock in two minutes or less. Turn the power off.
4. Any remaining liquid should contain a sufficient amount of antifreeze to be protected from freezing.

**NOTE: After winter, perform a Test Procedure before washing or drying any laundry to make sure all antifreeze has purged.**

## ~ NOTES ~

## ~ NOTES ~

# LaPalma - Equipment


**EQUIPMENT - INTRODUCTION....197**
**ENTRY STEP ....197**
Operation ....197
Tips....198
Lubrication ....198
**DRIVER'S DOOR (OPT) ....199**
**ENTRY DOOR....201**
Adjustments ....201
**SLIDE-OUT OPERATION....203**
Extending Main Room....204
Retracting Main Room....205
Manual Override Main Slide-out ....206
Extending Bedroom Slide-out....207
Retracting Bedroom Slide-out ....207
Manual Override Bedroom Slide-out....208
**AWNINGS ....209**
Window Awning (Opt) ....209
Awning - Patio....210
Awning - Automatic Carefree (Opt) ....214
Slide-out Cover....215
Awning Care & Maintenance....216
**SUNVISORS (OPT)....217**
**FANS....218**
Exhaust Fan....218
Rain Sensor Exhaust Fan (Opt) ....219
Tips....221
Bathroom Fan....221
**DOOR - SLIDING....222**
**SOFA....223**
Hide-A-Bed....223
Easy Bed w/Drawer (Opt) ....224
Air Mattress (Opt)....225
Electric Sofa Bed (Opt) ....226
**FLIP UP TABLE ....226**
**BOOTH DINETTE ....227**
Bed Conversion (Opt) ....227
Free Standing Table Leaf Extension ....228
**STORAGE UNDER BED....228**
**ENTERTAINMENT SYSTEMS ....229**
Video Cassette Recorder (VCR) (Opt) ....229
DVD Player (Opt)....229
Television (Front) with Lock-out Feature....229
Television Antenna....230
Hook-ups - TV Cable, Computer & Telephone ....231
Video Selector Box ....232
Satellite System - DSS Prewire (Opt) ....234
**HOME THEATRE SURROUND SOUND - DVD/CD/TV/VCR/AM & FM TUNER (OPT)....234**
**RADIOS....236**
Dash ....236
Bedroom ....237
Citizens Band Radio - Prewire (Opt)....240
**EXTERIOR ENTERTAINMENT CENTER (OPT)....240**

## EQUIPMENT - INTRODUCTION

This section covers the basic operation and care of various types of equipment found in the motorhome, most of which are provided for entertainment and comfort. More detailed information about specific equipment may be found in that particular manufacturer's manual. Optional equipment will also be discussed in this section which may not apply to all motorhomes.

**Detailed information with CAUTION or WARNING instructions for the various electronics, other than what is provided in this section, can be found in the manufacturer's manual.**

## ENTRY STEP
### *Operation*

The entry step features amber lighting under the step, automatic retraction with the ignition key in the RUN position and a last out feature. Located to the left, just inside the entry door, is the step switch.

**Operating the Entry Step:**

1. With the entrance door open, turn the step switch on.
2. Close the door. The step should retract and lock in the UP position. The step light will remain on.
3. Open the door. The step should extend and lock in the DOWN position with the under step light on. The step will retract when the door is closed.
4. When the step switch is turned off, the step should remain in the extended position with the door closed and the under step light off. Close the door and turn on the ignition switch. The step will retract for travel. To hold the entry step in the retracted position proceed with the following:
   - Turn the engine ignition switch off.
   - Wait 15 seconds and then turn the power step switch from off to on, then back off again. The step will stay retracted until the step switch is turned ON, or the ignition switch is turned on. The retracted position is useful for high curbs or on boat ferries.
5. With the power switch off, the step extended, the entrance door closed and the ignition turned on the ignition override system will go into effect and the step will automatically retract.
6. Turn the ignition off and open the door. The step will extend and lock in the DOWN position. This is the "last out" feature. When the ignition is on the step will always activate with the door movement, regardless of the power switch position.

## Tips

**If the step fails to operate:**

- Verify that the step switch is ON.
- Check the main power supply for the step. A 20 Amp circuit breaker located on the low current plate.
- A magnetic door jam switch is used to control step operation. Use a separate magnet to apply a "trigger" to the door jam switch. Rotate test magnet to align polarity field.

**WARNING: If the motorhome is driven with the step in the extended position there is the possibility of causing major damage to both the step and the motorhome.**

## Lubrication

Lubrication maintenance is essential to keep the step operating smoothly and reliably. Thoroughly clean the step before performing lube maintenance. This may require using a stiff nylon bristle-brush and automotive detergent. Allow the step to thoroughly dry. Use Kwik Lube Spray Lubricant or equivalent every 30 days on all pivot points, rotating linkages and slide mechanisms.

**CAUTION: Keep fingers, clothing and other hardware away from moving components.**

- Apply lubricant to all points in illustration.
- Operate the step several times to allow lubricant to penetrate surfaces. Repeat lubricant application.
- Extend step and clean excess lubricant to reduce road grime accumulation.

**NOTE: Clean and lubricate step more frequently in adverse weather conditions. Mud, snow, road salts and sand quickly break down lubricants and corrodes painted surfaces.**

**NOTE: Silicone lubricants and WD-40 are not recommended as they evaporate and are not weather resistant. Moving components are then susceptible to the elements.**

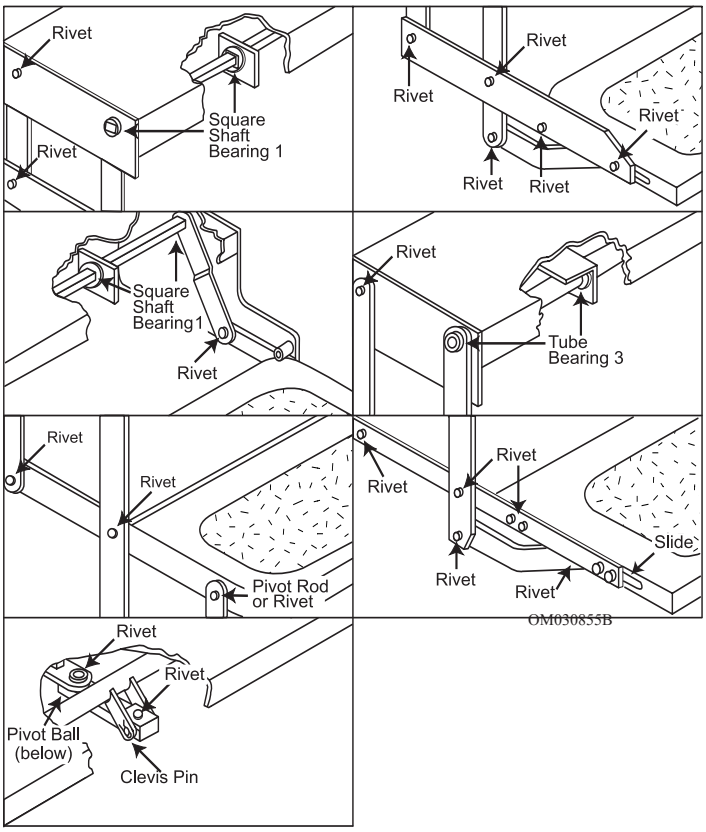


- Lubricate pivot points thoroughly with Kwik Lube Spray Grease or equivalent.
- Work step several times, allowing lubricant to work into pivot point surfaces.
- Repeat as necessary.
- Remove excess lubricant.

## DRIVER'S DOOR (OPTIONAL)

The driver door in the motorhome allows the driver to move in and out of the motorhome with ease. The door has a power window controlled by a electrical switch. Push the switch to either lower or raise the window.

The door was installed and adjusted to a factory setting. The position of the strike bolt may change over the course of time. The setting may need to be adjusted to insure that your door operates smoothly and efficiently.

To keep the driver door in good condition and operating in the manner in which it was designed, some routine maintenance items should be attended to on a regular basis. These items are as follows:

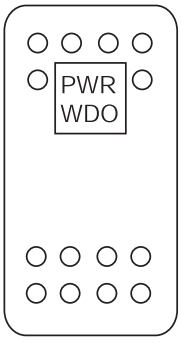


*Electrical Switch* OM060178

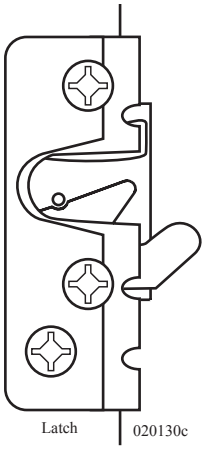


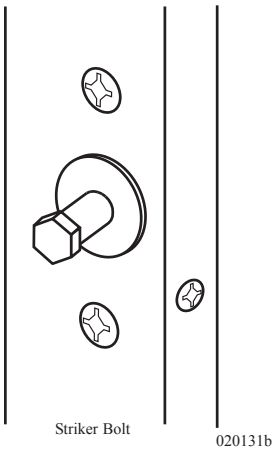


**Strike Bolt Adjustment:**

- Slowly close the door, observing the latch and strike bolt alignment. Do not attempt to close the door if the latch alignment is off. If the latch alignment is correct, close the door allowing the latch to catch in the first (primary) position only.
- The latch should move to the second position with just a slight pressure applied to the door. Press on the door to see if there is any further movement of the door.
- The entry handle should operate with little effort to open the door. If using an excessive amount of pressure is required, this indicates the bolt is set too far back.
- Using a wrench, loosen the strike bolt. Make all adjustments in small increments. Tighten the bolt firmly after making adjustments.
- Ensure the three screws holding the latch assembly on the door are tight along with the two on the doorjamb.

**Hinges:**

- The hinges for the door requires slight lubrication annually, or as needed, with any high-quality, dry spray lubricant.

**Outside Skin:**

- To maintain appearance and long service life, the door skin should be washed and cleaned periodically. Cleaning removes the accumulation of dust and dirt which can combine with sunlight and wind to attack exposed surfaces, both chemically and abrasively.

## ENTRY DOOR

The entry door by design is virtually maintenance free. Installed, adjusted and tested at the factory for all operations, the door uses two separate locks for personal safety and security. The door handle incorporates a primary and secondary latching system. One locking system is the door handle and the other is a dead bolt. However, keeping the entry door in good operating condition requires some routine maintenance items on a regular basis.

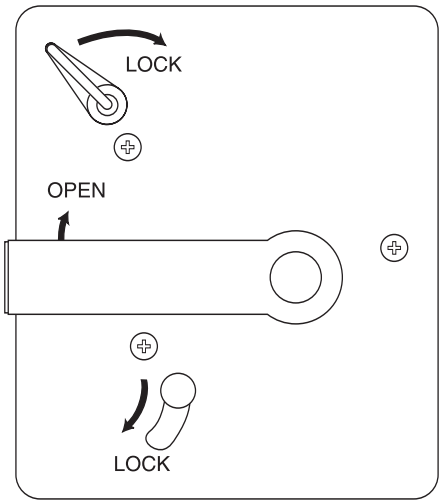

OM020129

### *Adjustments*

Adjustments can help maintain the entry door performance. These items are as follows:

- **Strike Plate/Bolt Adjustment:** The position of the striker plate or bolt may change over the course of time and with frequent operation. The setting may require adjustment to ensure that the door operates smoothly and efficiently.

**Adjusting the Entry Door Latch:**

- Slowly close the entry door, observing the latch and strike bolt alignment. Do not attempt to close the door if the latch alignment is off. If the latch alignment is correct, close the door allowing the latch to catch in the first (primary) position only.
- The latch should move to the second position with just a slight pressure applied to the entry door. Press on the entry door to see if there is any further movement of the door.
- The entry handle should operate with little effort to open the entry door. If using an excessive amount of pressure is required, this indicates the bolt is set too far back.
- With a 5/8" inch box wrench or socket, loosen the strike bolt. Make all adjustments in small increments. Tighten the bolt firmly after making adjustments.
- Ensure the two torque head screws holding the latch assembly on the door are tight along with the two on the doorjamb.

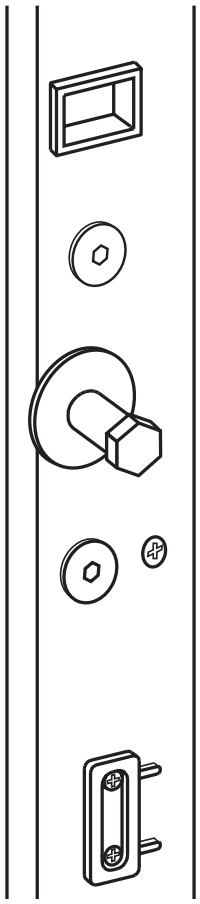
OM020131

**CAUTION: When operating the entry door ensure the dead bolt latch is fully in the unlock position prior to closing the door. Failure to do so can result in damage to the dead bolt and/or entry door.**

- **Locks:**
  The locking cylinder requires slight lubrication on an annual basis, or as needed. Use powdered graphite, not a petroleum product. Petroleum products gum the cylinder and inhibit smooth operation. The upper lock is the dead bolt, while the lower lock is the privacy lock. Applying a light coating of white lithium grease to the face of the lock bolt helps in obtaining a smooth close.

- **Hinges:**
  The hinges for the door requires slight lubrication annually, or as needed, with any high-quality, dry spray lubricant.

- **Screen Door - Adjusting:**
  The screen door can be adjusted to set flush in the door jam. This requires two separate adjustments be performed. The first adjustment made is at the screen door latch/catch itself. Loosen the two Phillips screws holding the latch to the door. This will permit vertical adjustment. Move the latch far enough to allow it to catch on the striker mounted on the door frame, tighten both screws. The striker mount on the door frame permits horizontal adjustment. Again, loosen the two Phillips screws holding the striker assembly. Move the striker to center the latch and tighten the Phillips screws in place.

- **Screen Door - Changing the Slider:**
  The sliding cover is a simple procedure to replace. Place the slider in the center. Pulling from the center of the slider will bow enough to allow easy removal. To re-install, reverse this procedure paying attention to install the upper left corner first and the location of the stop tabs.

- **Fiberglass Skin:**
  To maintain their appearance and a long service life, the door skin panels should be washed and cleaned periodically. Cleaning will remove the accumulation of dust and dirt, which can combine with sunlight, and wind to attack exposed surfaces, both chemically and abrasively.

The slide-out rooms operate using an electric switch controlling a electric drive motor. Slide-out room operation uses many safety features preventing mechanical damage or physical harm. The slide-out room(s) will not operate until all safety requirements are met.

The design of the slide-out system requires very little maintenance. To ensure long life of the slide-out system, follow these simple guidelines:

- **Inspect** the roof of the slide-out should be checked for debris such as pine needles, dirt, leaves, sticks, etc. Any debris left on the top may cause damage to the seals when being retracted. If debris is present wash with soap and water, then rinse.
- When the room is out visually **inspect** the wipe seal. The seal should be clean and free of dirt or other foreign material. **Inspect** the seal for tears.
- In the event the slide-out room leaks, fully retract it. If necessary, tape the exterior opening closed with duct tape until repairs to the motorhome can be completed.

**NOTE: Do not use any petroleum-based products on the slide-out seal. Petroleum based products can damage the paint and will cause premature aging of the rubber seal.**

**WARNING: Move the driver's seat forward before activating the slide-out room. Damage to the upholstery can occur. The outside area must be clear of any obstructions restricting slide-out room operation. Ensure there is five or more feet of clear space outside the slide-out room prior to extending or damage can occur. When retracting the slide-out room, ensure there is sufficient clearance inside the motorhome. Never move the motorhome with any slide-out room extended.**

**CAUTION: Continuous operation of the slide-out room can drain the batteries and damage the motor from overheating.**

## *Extending Main Room*

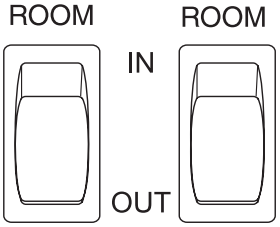

SLIDE-OUT CONTROLS
OM030911

To Extend the Main Slide-out Room:

- Move the driver seat forward.
- Confirm that there is at least five feet of clearance outside the motorhome for the slide-out room to extend.
- Ensure the ignition key is in the OFF position.
- The park brake must be applied.
- Be sure the bay doors under the slide-out room are closed.
- The house batteries are fully charged.
- Be sure all people, pets and objects are clear of slide-out room path.
- If applicable, remove locking bar mechanisms on top of the slide-out room inside the motorhome.
- The control switch for the slide-out room is on the system monitor panel.
- Press and hold the front slide-out room switch in the OUT position. The slide-out room will slowly move to the OUT position. Release the switch to stop room movement. To continue the room movement, push and hold the switch in.
- Release the slide-out switch when the room is fully extended (a change in motor sound indicates extension). The slide-out drive motor will not stop automatically; the switch must be released.
- If equipped, extend additional slide-out rooms.
- Level the motorhome with the leveling system.

**NOTE: Extensive damage could occur to the slide-out room and awning when extending the slide-out room in snow, sleet, ice or freezing rain. In such conditions, if the slide-out room is extended, clear the awning and ensure free movement prior to operating the slide-out room.**

**CAUTION: Dirt and grit trapped under the slide-out room could result in damage to the floor. Continuous operation of the slide-out could cause a drain on the house batteries and damage to the slide-out motor.**

**CAUTION: If applicable, remove the slide lock bars before moving the slide-out room. Damage can result if bars are left in position. The manufacturer is not responsible for damage resulting from operating the slide-out room with the slide lock bars left in position.**

**NOTE: Do not leave the slide-out in the extended position during severe weather. Conditions such as high winds or heavy rain may cause damage to an extended slide-out.**

**To Retract the Main Slide-out Room:**

- Check for sufficient clearance inside the motorhome before retracting the slide-out room.
- Clean the floor, if applicable, to ensure there is no dirt or grit that could result in floor damage during operation.
- Move the driver seat forward.
- Inspect the exterior to ensure there are no sags in the awning material.
- Remove any debris from the top of the slide-out room.
- Retract the leveling jacks prior to operating the slide-out.
- Turn the ignition switch OFF. The slide-out room will not operate with the engine running.
- The house batteries should be fully charged.
- The park brake must be applied.
- Ensure all people, pets and objects are clear of the slide-out room path.
- Press and hold the switch in the IN position. The slide-out room will move slowly in. To stop the slide-out room, release the switch. To continue the room movement, push and hold the switch in.
- Release the switch.
- Rain water can pool on the slide-out awning. Added weight will cause the awning to sag. Upon retracting the room, the material can catch between the top of the slide room and the opening of the motorhome. It will be necessary to retract the room in small increments, allowing the water time to run off.
- If applicable, place locking bar mechanisms between the wall and top edge of the slide-out room to lock room in place.

**WARNING: If locking bar mechanisms are used, make sure they are secured tightly before moving motorhome. Locking bars can come loose and cause personal injury.**

**NOTE: Be sure you have sufficient clearance on the inside of the motorhome (driver's seat, etc.) before you retract the slide-out room. Ensure the floor is clean before you retract the slide-out room. Trapped dirt or grit under the slide-out room can scratch the floor surface. Never move the motorhome with the slide-out room extended.**

## Manual Override Main Slide-out

The slide-out system can be retracted in the event of a power loss.

**If the Room Does NOT Move When the Switch is Pressed:**

- The house battery cut-off switch must be on.
- Check if the battery is fully charged and connected.
- If applicable, make sure the locking bar mechanisms are removed.

After the previous items have been checked and the room still does not move when the slide-out switch is pressed, use the following steps to manually override the slide-out room:

- To move the slide-out room manually, retract the motorhome leveling jacks (see “Leveling Jacks”).
- To move the slide-out room, move the lever on the drive motor counterclockwise to release motor brake. The drive motor and mechanism is located behind the slide-out storage compartments. Turn the square shaft next to the drive motor using a 1” wrench.
- Once the room is in position, apply pressure to the wrench so that the room is sealed. Return the brake lever to its normal position to lock the room in place.
- Take the motorhome to an authorized dealer for service.

**NOTE: The slide-out room is heavy and may require several persons to push it into the retracted position. Once the slide-out room is in the fully retracted position, return the brake level to the lock position to hold the room in place.**

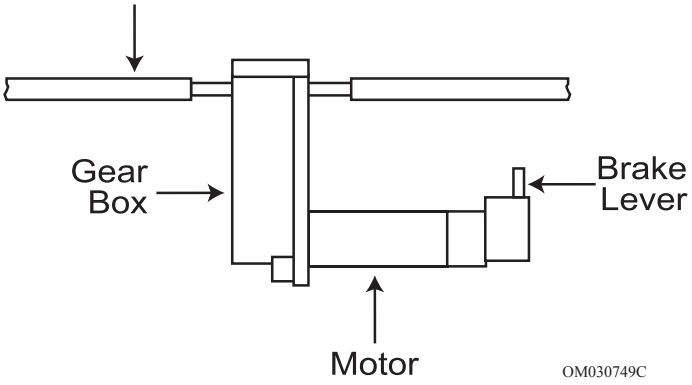

## Extending Bedroom Slide-out

**To Extend the Bedroom Slide-out:**

- Confirm that there is at least five feet of clearance outside the motorhome for the slide-out room to extend.
- If applicable, remove locking bar mechanisms on top of the slide-out room inside the motorhome.
- Press and hold the slide-out room switch in the OUT position. The switch is located on the systems monitor panel or in the bedroom. The slide-out room will slowly move to the OUT position. Release the switch to stop room movement. To continue the room movement, push and hold the switch in.
- Release the switch, which will lock the room in position.

**CAUTION: Dirt and grit trapped under the slide could result in damage to the floor. Continuous operation of the slide-out could cause a drain on the house batteries and/or damage to the slide motor.**

**CAUTION: If applicable, remove the slide lock bars before moving the slide-out room. Damage can result if bars are left in position. The manufacturer is not responsible for damage resulting from operating the slide-out room with the slide lock bars left in the locked position.**

**NOTE: Do not leave the slide-out in the extended position during severe weather. Conditions such as high winds or heavy rain may cause damage to an extended slide-out.**

**NOTE: Extensive damage could occur to the slide room and awning when extending the slide room in snow, sleet, ice, or freezing rain conditions. In such conditions, if the slide-out room is already extended, clear the awning and ensure free movement prior to operating the slide room.**

## Retracting Bedroom Slide-out

**To Retract the Bedroom Slide-out:**

- Ensure there is sufficient clearance inside the motorhome for the slide-out room.
- If applicable, clean floor.
- Remove any debris from the top of the slide-out room.
- Press and hold switch to the IN position. To stop the slide-out room before it fully retracts, release the switch. To continue the room movement, push and hold the switch in.
- When the room is fully retracted, release the switch. The room will lock into position.
- After the slide-out room is retracted, if applicable, place locking bar mechanisms between the wall and top edge of the slide-out room and lock into place.

## Manual Override Bedroom Slide-out

The slide-out system can be retracted in the event of a power loss.

**If the room does not move when the switch is pressed:**
- The ignition switch is **OFF.**
- Check to make sure the battery cut-off switch is on.
- Check if the battery is fully charged and connected.
- If locking bars are used, make sure they are removed.

**WARNING: Do not work on the slide-out system unless the battery is disconnected. Make sure the floor is clean before retracting the slide-out room. Dirt or grit that is trapped under the slide-out can cause damage to the floor.**

After the previous items have been checked, and the room still does not move when the slide-out switch is pressed, follow these simple steps to manually override the slide-out room.

**Manual Override for Bedroom Slide-out:**
1. Lift up the mattress and unscrew baseboard to gain access to the slide-out cover board and mechanism.
2. Remove 12 Volt DC from the motor by disconnecting the plug from the slide-out motor to the power supply.
3. The drive mechanism has a sliding coupling to engage and disengage the drive motor. Turn the large hex nut clockwise to unlock the drive motor.
4. The slide-out then can be pushed back.
5. Once the slide room has been manually retracted, turn the large hex nut counterclockwise to lock the room in place.
6. Take the motorhome to an authorized dealer for service.

**NOTE: The slide out room is heavy and may require several persons to push it into the retracted position.**

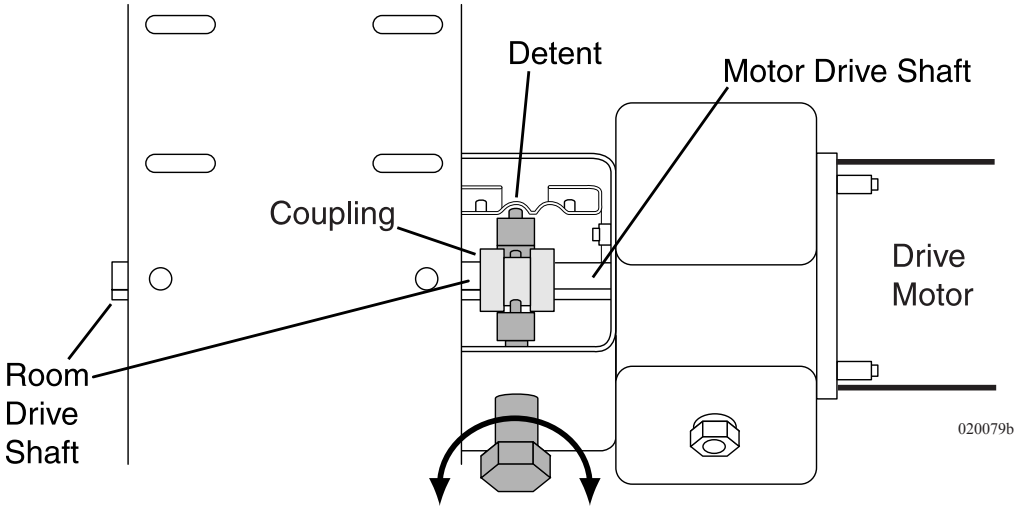

**To Extend Awning:**

- Hook loop of pull strap with catch rod and pull awning, reel assembly and side arms to extend fully away from motorhome.
- Hook pull strap on side strap hook, remove catch rod from pull strap and store.

**To Retract Awning:**

- Hook catch rod on pull strap, remove pull strap from side strap hook and slowly allow awning to retract.
- Remove catch rod from pull strap and store.

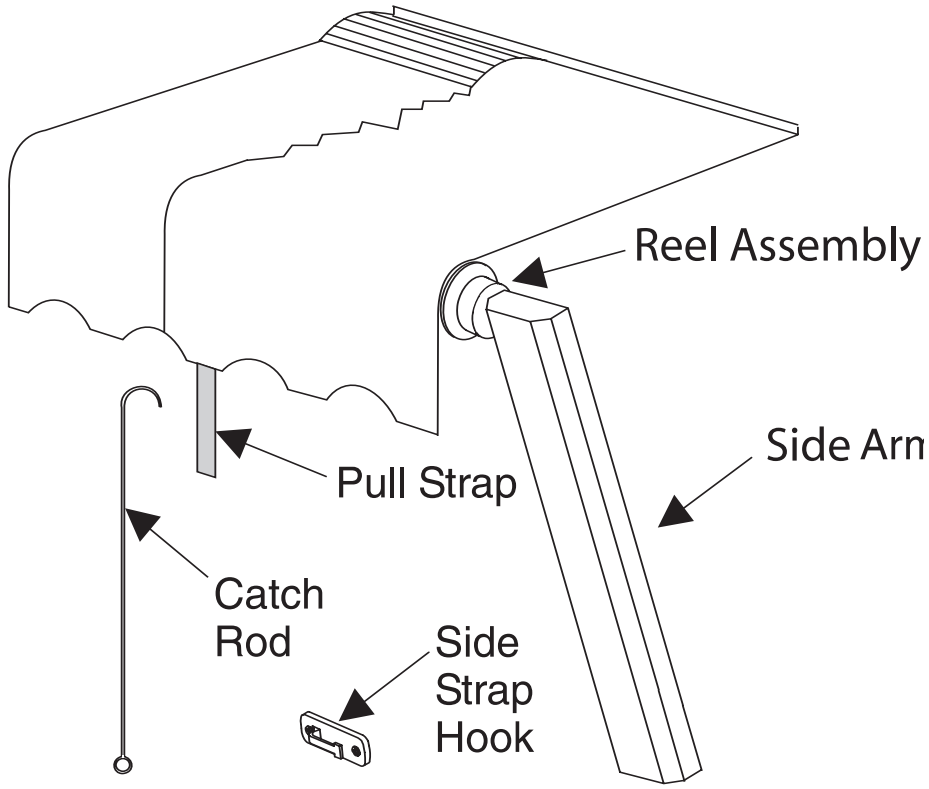


OM030792

## *Awning - Patio*

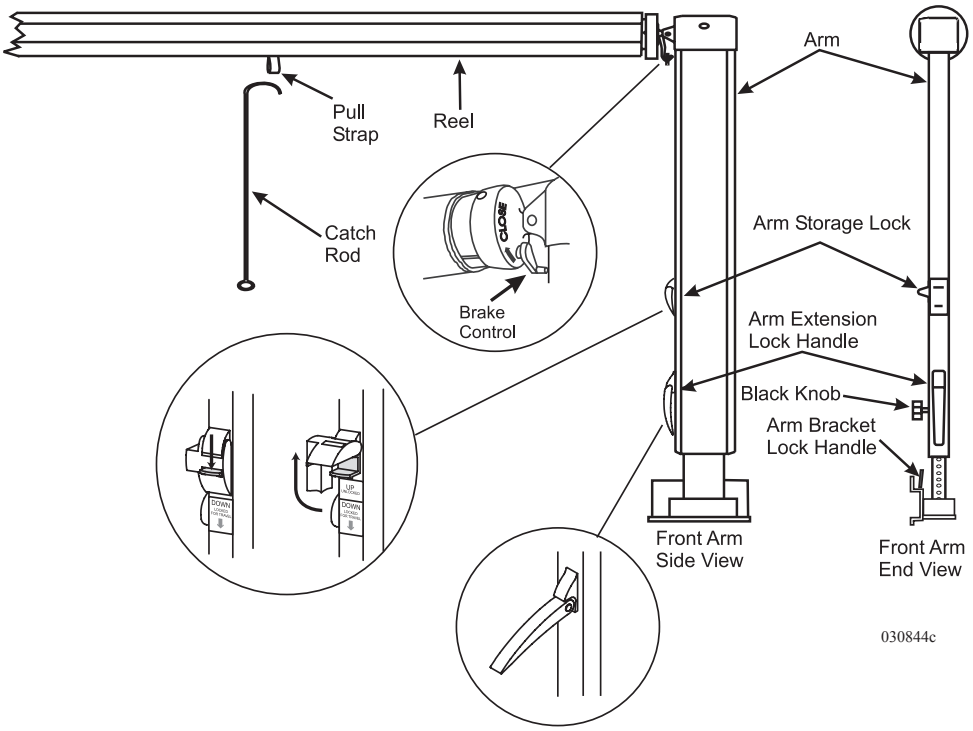


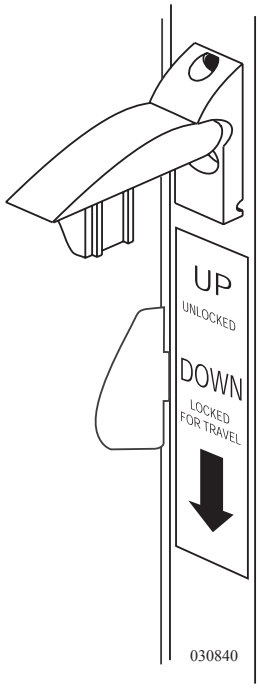


*Lower Brake Control*

**To Unlock the Awning:**

Start with either awning leg and repeat the following steps for each leg.

1. Loosen the black locking knob located on the backside of the awning leg (only about six turns are needed). This will allow the support brace to move freely.
2. Unlock the travel lock by using one hand to squeeze inner and outer arm to remove tension from storage lock. Push up on tab and swing lock away.
3. Move the brake control (front leg only) to the up/unlock position.

**To Extend the Patio Awning:**

1. Locate the awning pull rod.
2. Locate the loop of the pull strap and hook it with the awning pull rod. Draw the awning away from the motorhome to the desired extension.

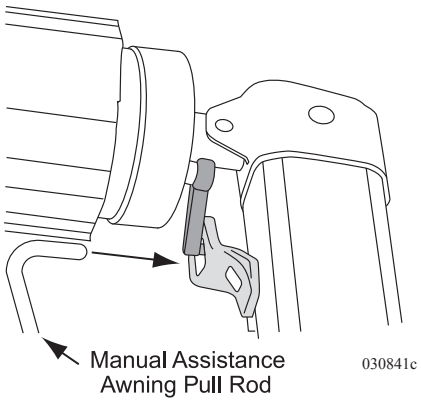


**WARNING: Always use the pull strap for extending and retracting awning. Never retract awning while holding onto the awning arm. Hands or fingers caught between the awning arm channel and brace channel during awning retraction may result in serious injury.**

3. Slide the inner bracing rafters to the top of each arm ensuring the bracing is locked in place. Tighten the black locking knob.

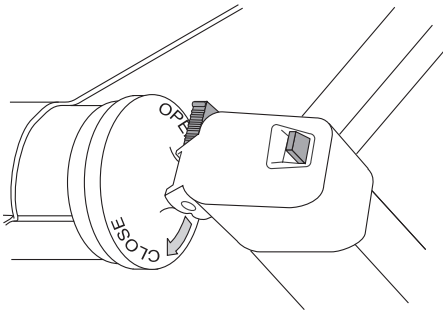


**NOTE: Ensure the locking tab on the support brace is latched through in the hole in the end cap.**

4. If equipped with Canopy Clamps, fasten the clamps at this time.
5. Using the arm extension lock handle, the awning can be hoisted upwards for additional clearance. Grasp upper arm with one hand and lift slightly upward. While lifting upward, push in on the release lever located on the lower portion of the upper arm. Lift front of awning to the desired height. Support the weight of the awning with one hand while relaxing release lever and allow the engaging pin to set into a hole in the lower arm. Go to the other awning arm and do the same. Ensure the awning is straight.
6. Slide the center pull strap to one end of the awning and store it by wrapping the strap around the awning leg.

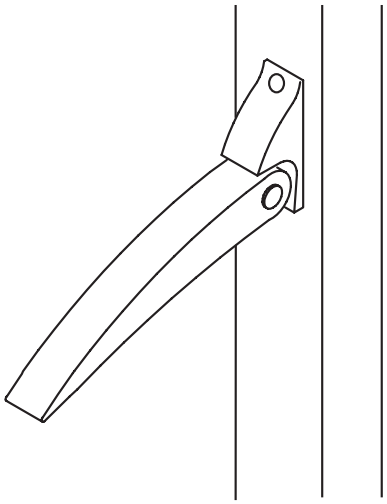

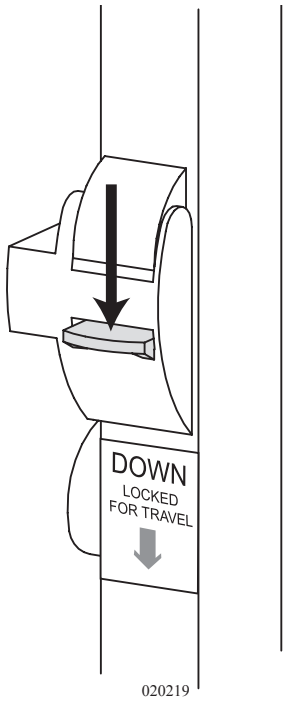


**To Retract the Patio Awning:**

1. Loosen the strap from the awning leg if it has been stored there.
2. Support the weight of the awning with one hand while opening the extension lock handle and lower the awning until the arms rest on the lower stop bolt. Loosen the two black locking knobs enough to allow the support brace to travel freely.
3. If equipped with Canopy Clamps, remove and store the clamps at this time.
4. Release the locking tab on the end cap of the awning leg and slide the inner support brace to down the awning leg to the stop bolt. Repeat for opposite side.
5. While pulling down slightly on the pull strap, slide the brake control down located on the front awning leg.
6. Keeping downward pressure applied, slide the pull strap to the center of the awning while holding on to the strap.
7. Place the hook end of awning rod into pull strap loop to assist in retracting the awning. Make sure pull wand does not slip out of pull strap loop, allow the awning to roll up to the stored position.
8. Store the awning rod until it is needed again.
9. Verify that the brake control is in the locked or closed position. Snap the arm storage locks into the down position and tighten black locking knobs.

**Rain Release Setting:**

After the awning has been extended, choose the rain release position to prevent water build up on the awning. To position the awning in the rain release setting, lower one arm of the awning and leave the other arm in the normal position. This will create enough of a slope for adequate water run off.

**NOTE: Water weighs 8.33 pounds per gallon. The awning was not made to withstand the 500 to 700 pounds that could accumulate. It is best not to subject the awning and the motorhome to the needless strain.**

**Using the Carport Feature:**

(Not available with Carefree One Touch Awnings.)

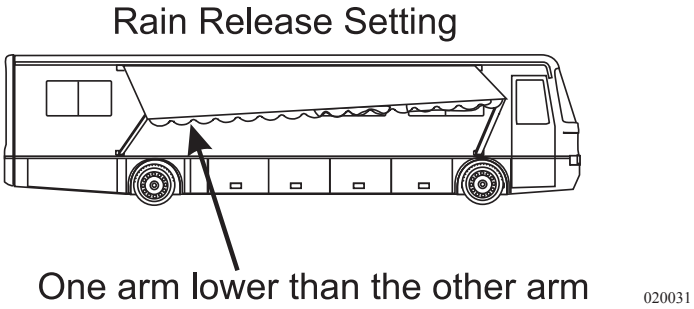

**Using the Carport Feature:**
(Not available with Carefree One Touch Awnings.)

1. Unlock and extend the awning as described under "To Unlock the Awning" and "To Extend Awning."
2. Unlatch the bottom of the rear arm by pushing in on the lock handle on the arm bracket. Swing the arm away from the motorhome to an upright position.
3. Drive the stakes through the bottom holes in the arm.
4. Raise the rear arm extension lock handle all the way up or to the desired height and lower the lock handle to lock the arms in place.
5. Repeat instructions 2 through 4 for the front arm.

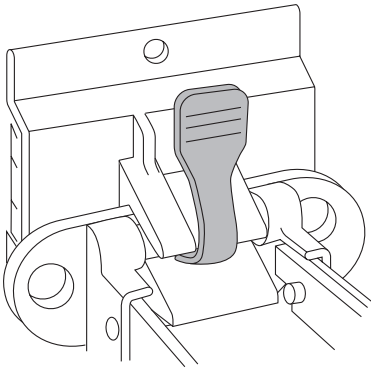

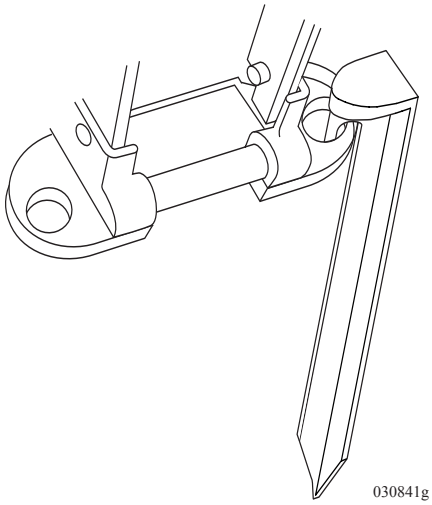


**NOTE: To move the awning out of the carport position reverse the above steps.**

**Securing the Awning for Travel:**
Before traveling, check the following:

1. The awning is fully retracted against the sides of the motorhome.
2. The black locking knobs are tightened.
3. The brake control is in the full down (locked) position, and no red warning is showing.
4. The storage locks are down and in the locked position.
5. The bottom of the front and rear arms is latched properly into the bottom brackets.
6. The awning pull rod is stored away.

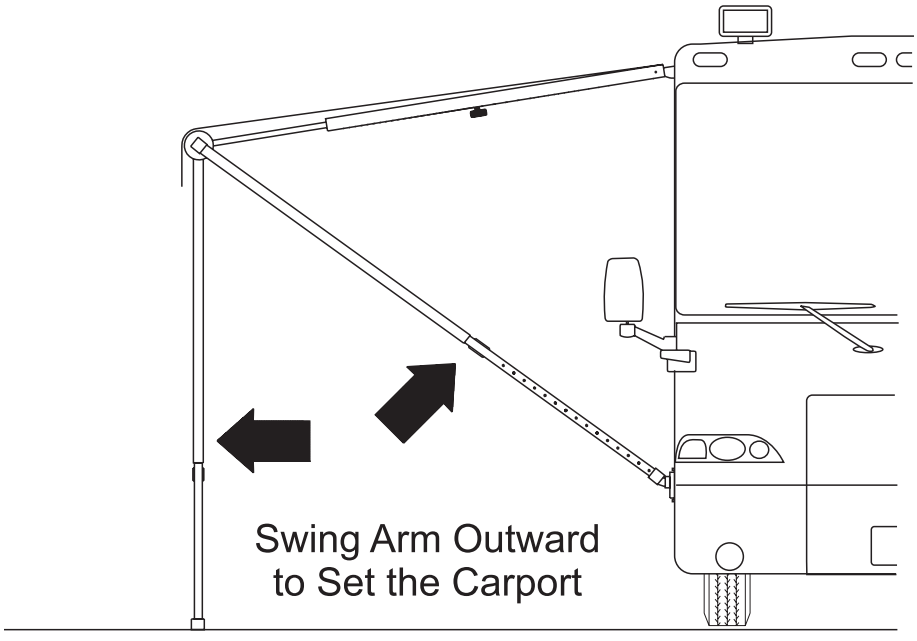

## *Awning - Automatic Carefree (Optional)*

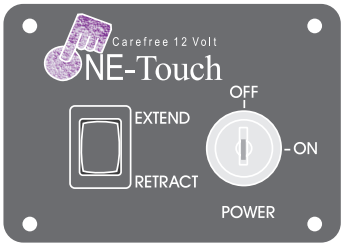


OM030821

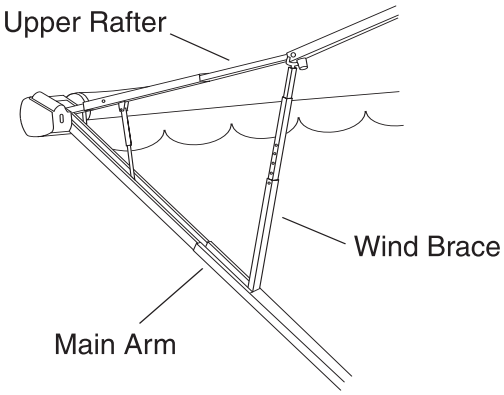


OM020149

The Carefree One Touch automatic awning requires only "finger tip" operation. A key lock on the One Touch switch pad is provided to prevent accidental deployment of the awning while the motorhome is in motion. The key is removable in the lock or unlock position. Gas filled struts keep the awning fabric tight at any extended position. The 12 Volt DC motor for the One Touch awning uses approximately 15 Amps while in operation.

**To Extend the Awning:**

- Verify all persons and objects are clear from the extend path of the awning and related hardware.
- Turn the One Touch key to the ON position.
- Press and hold the momentary switch to EXTEND. Motor will automatically stop at full extension.
- Allow 14 seconds for awning to reach full extension.
- Extension distance or fabric tension is adjusted by toggling between RETRACT and EXTEND.
- Turn the One Touch key to the OFF position.
- Install the wind braces (2) between the upper rafter and the main arm. Adjust wind brace so the inner spring is under tension.

**CAUTION: The patio awning requires nine feet of lateral clearance from the side of the motorhome. This distance will allow the awning to reach full extension. The One Touch patio awning was not designed with a carport feature or a rain release setting. The awning should be retracted if the motorhome is left unattended or high wind conditions exist. Otherwise, wind damage to the awning may occur.**

**NOTE: It is not required to have the awning at full extension. Awning may be stopped at any time of extension or retraction by releasing the momentary switch.**

**To Retract the Awning:**

- Remove the wind braces.
- Verify all persons and objects are clear from the retract path of the awning and related hardware.
- Turn the One Touch key to the ON position.
- Press and hold the momentary switch to RETRACT. The motor will automatically stop at full retraction.
- It takes approximately 14 seconds for the awning to travel from the fully extended position to the fully retracted position.
- Turn the One Touch key to the OFF position to avoid accidental deployment of the awning while the vehicle is in motion.

**Tips - If the awning fails to retract or extend:**

- Verify the One Touch key is in the ON position.
- The house battery cut off switch is in the ON position.
- The house battery voltage is at 12 Volts or above.
- Verify proper electrical connection from the awning motor to the side of the motorhome.

**Emergency Retract Procedure:**

If the One Touch awning fails to retract and proper DC voltages have been verified, the One Touch awning has two emergency methods of alternately retracting the awning.

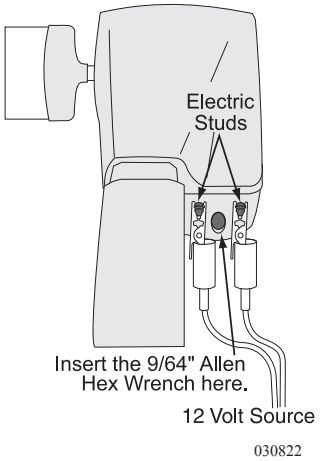


1. Two exposed electrical studs are mounted externally at the forward end of the awning at the motor assembly. An alternate 12 Volt DC positive and negative supply may be applied to these connections. If awning fails to move, reverse the polarity of the alternate supply leads.
2. On the motor assembly, mounted externally at the forward end of the awning, is an opening. Insert a 9/64” Allen hex wrench. Using an electric drill, wind the awning to the retract position.

**CAUTION: When using an alternate method to operate the awning, use extreme care to keep appendages, hair or loose clothing away from exposed rotating hardware.**

## *Slide-out Cover*

The slide-out cover is automatic. When the slide-out moves in or out, the cover reacts to the slide-out direction. A fixed edge of the slide-out cover is installed into an awning rail, mounted just above the slide-out. A spring-loaded roller with special brackets mounts to the slide-out. In a hard rain, the cover helps prevent water from penetrating the seal of the slide-out.

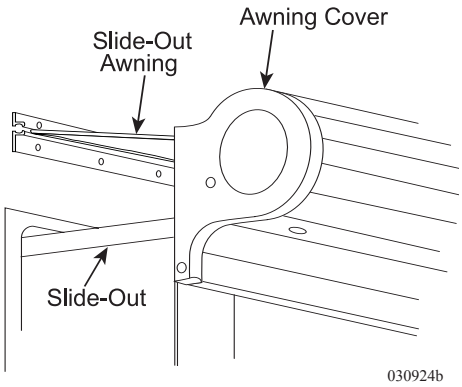


The slide-out cover will extend automatically attaining full coverage when the slide-out achieves maximum extension.

**NOTE: Water may pool on top of the extended cover. As the slide-out is retracted, the water is removed when the cover retracts.**

The slide-out cover retracts automatically and rolls up to the travel position when the slide-out is completely closed.

**NOTE: When retracting the slide-out, stop the room approximately halfway. Confirm that the fabric is rolling properly before fully retracting the slide-out.**

## Awning Care & Maintenance

Mildew will not form on the awning material itself, but it may form on the dust accumulated on the canopy. A quality vinyl cleaner, such as Carefree Awning Magic, will help keep your awning looking new. Be sure to follow the instructions on the container.

**NOTE: Allow the awning material to thoroughly dry before rolling the awning up. Metal surfaces should be cleaned with soapy water and thoroughly rinsed.**

**Care of Awning Acrylic Fabric:**

The acrylic fabric should be cleaned regularly before substances such as dirt, leaves, etc., are allowed to accumulate on, and become embedded in, the fabric. The fabric can be cleaned without being removed from the awning. Simply brush off any loose dirt, leaves, etc. Hose down and clean with a cloth and mild soap. **DO NOT USE DETERGENTS.** Allow to air dry, preferably on a warm sunny day. Should you have to retract the awning when the fabric is wet, it should be extended at the first opportunity to finish air drying.

Avoid leaving the awning partially extended during rainy conditions. The awning is at the strongest setting when fully extended.

**Cleaning and Maintenance:**

- **Washing:** On a monthly basis, loosen hardened dirt and remove dust from the awning with a dry, medium bristle brush. Thoroughly rinse both the top and bottom with a hose. This process can be made easier with awning maintenance products. Saturate the fabric with the solution and leave it on for 15-20 minutes. Wash both sides of the awning using an awning brush. If necessary, reapply the solution to keep fabric saturated. Rinse the awning thoroughly. Repeat, if necessary, until most of the stains disappear.

- **Water Leaks:** If leaking occurs after washing, it generally results from insufficient rinsing. If water drips through the needle holes in the stitching use a commercial seam sealer which is available in canvas and trailer supply stores. Paraffin wax may also be applied to the top of the seams. As the awning “weathers” these holes will normally seal themselves.

It is normal for slight leakage to occur through the fabric where water is allowed to accumulate or pocket on the fabric. See “Storm Precautions” for information on the awning settings for proper water drainage. Sometimes soap or chemical residue, such as from active agents in insect fog or sprays, can “wet” the fabric so that it appears unable to repel water. Rinse the fabric thoroughly and test to see if it is water repellent after it dries. If leakage continues after repeating the washing and thoroughly rinsing, please contact Carefree Awning Magic concerning further maintenance.

- **Storm Precautions:** The warranty does not cover damage caused by acts of nature; therefore, steps should be taken to prevent damage from occurring due to wind, rain or storms. If you are leaving or retiring for the night, close the awning. This takes only a few seconds and it gives the best protection for the awning. If unable to close the awning, lower both ends of it as far as you can. This will create a sufficient slope for water run-off. One end may be lowered to sufficiently divert the water, if the awning is being monitored.

Water weighs 8.33 pounds per gallon. The awning was not made to withstand the 500 to 700 pounds that could accumulate. It is best not to subject the awning and the motorhome to the needless strain.

## SUNVISORS (OPTIONAL)

To extend the sunvisor press and hold the lower portion of the control switch until the desired location is obtained. Once the desired point is obtained the sunvisor will remain in that position until changed. Retracting the sunvisor is the same as extending, except the upper portion of the switch is used. Cleaning the sunvisor should be done using a soft clean brush to remove dust.

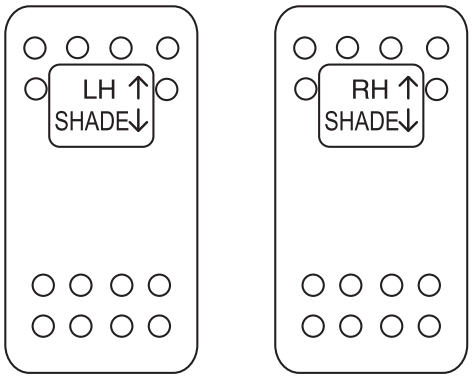


080306b

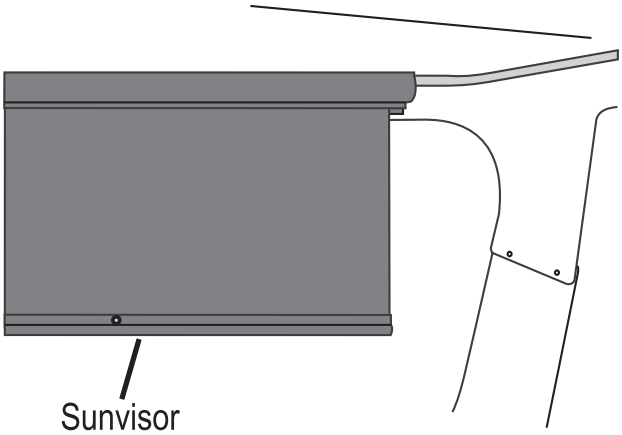


OM030853

## FANS
### *Exhaust Fan*

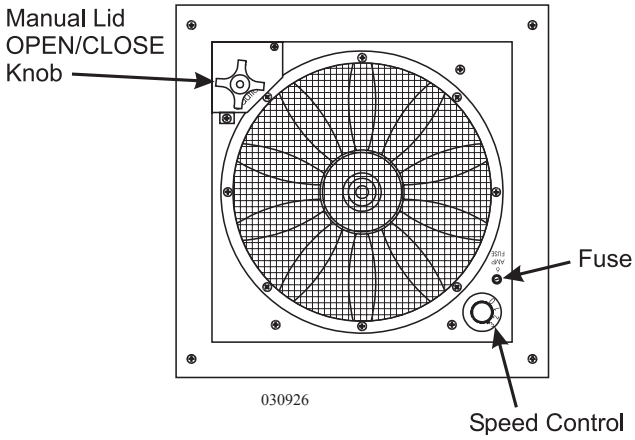


The exhaust fan is a three-speed controlled fan with a zero or off position on the fan. The exhaust fan requires the presence of 12 Volt DC to operate. The fan will extract air from the motorhome. There are two ceiling vent fans. The knurled knob manually opens and closes the dome cover. The rotary knob selects the operating speed of the fan. When the dome cover opens approximately two inches, the fan motor begins to operate.

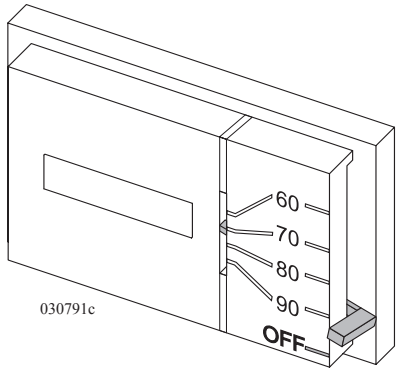


**To Operate the Fan:**

- The battery cut-off switch needs to be set ON.
- The fan blades activates once the dome opens past approximately two inches.
- The dome manually opens and closes using the knurled knob.
- If applicable, set wall thermostat at desired setting.
- Select the desired fan speed on the speed control dial:

**Zero = OFF**
**One = LOW**
**Two = MEDIUM**
**Three = HIGH**

**NOTE: If the speed switch is in the "0" position the fan operates only as a vent.**

- To keep condensation from accumulating open the vent fan lids slightly to help the air circulate. Condensation occurs naturally from fluctuations in interior and exterior temperatures, humidity and dew point changes, steam from cooking, or boiling large amounts of water on the cooktop. Shower usage also produces condensation.
- If the fan fails to operate, check for either a blown fuse in the domestic fuse panel or the 6-amp fuse on the fan.
- To clean the screen, remove the eight screws holding it in place. Wash the screen using a non-abrasive soap and water. Re-install the screen and tighten the screws.

- Keep all the vents closed when using the Fantastic Fan Vent. Direct the airflow by slightly opening the window(s) on the shaded side of the motorhome to obtain the maximum airflow, especially on hot, sunny days. Close all the roof vents. The area between the open window(s) and the Fantastic Vent supplies the maximum airflow and providing the most comfort.

**NOTE: Do not leave the vent cover open while the motorhome is stored or unattended for extended periods. High winds, other unusual conditions or obstructions may prevent closing. The resulting leakage could cause serious damage.**

## *Rain Sensor Exhaust Fan (Optional)*

The exhaust fan with rain sensor is a three-speed fan, which operates from 12 Volt DC power. There are three basic controls located on the exhaust fan: Adjustment Knob, Fan Speed Rotary Knob and the Fan Blade IN/OFF/OUT Control Switch.

During normal operations, the Adjustment Knob offers manual control of the dome cover for opening and closing. After the dome opens, pull adjustment knob down to Manual, then adjust the dome height and immediately push up and back to Auto. After adjusting the dome, check Knob to insure it is locked into the gearbox. When the rain sensor is wet, using the Adjustment Knob can manually open the dome to override the rain sensor.

**WARNING: Keep fingers away from Adjustment Knob while dome is automatically opening or closing, unless deliberately intending to apply opposite force to stop the dome partially open.**

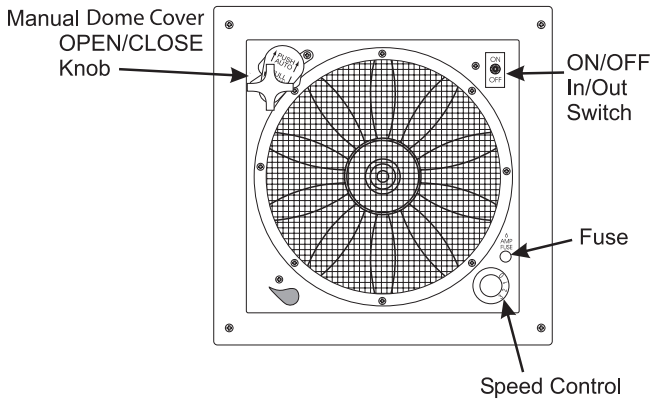


The Fan Speed knob controls the operation speed of the fan blade. The blade can be set between the "0" which represents OFF, to "3" which represents the fast blade setting.

The IN/OFF/OUT switch controls fan direction, which determines airflow direction through the exhaust fan. When the dome cover opens approximately two inches, the fan motor begins to operate. By pressing the IN/OFF/OUT switch to the IN position, exterior air passes through the exhaust fan into the motorhome. By pressing the IN/OFF/OUT switch to the OUT position, interior air passes through the exhaust fan to the exterior of the motorhome. By pressing the IN/OFF/OUT switch to the center, OFF position, the fan blade operation will cease. The rain sensor is always active in any mode. If the fan blade is in the OFF or IN mode, rain can infiltrate the motorhome until the dome is closed via the rain sensor.

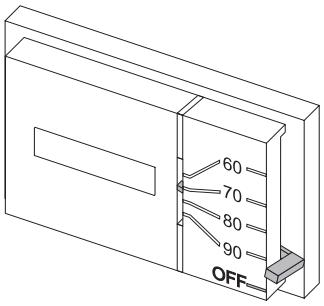

030791c

The wall thermostat is for automatic control of the exhaust fan. Select a maximum ambient temperature between 60°F to 90°F. When the interior ambient temperature is warmer than the thermostat setting, the dome opens automatically and the fan blade turns on to the pre-selected speed and direction. When the motorhome cools below the thermostat setting, the dome closes and turns the fan blades off.

**To Operate the Fan:**

- The Battery cut-off switch needs to be ON.
- Select the desired fan direction to IN/OUT.
- Select the desired fan speed.
- Select the maximum ambient temperature on the wall thermostat.

**NOTE: Let fan come to a complete stop before changing fan direction.**

**NOTE: If the speed switch is in the "0" position the fan operates only as a vent.**

## Tips

- To keep condensation from accumulating open the vent fan lids slightly to help the air circulate. Condensation occurs naturally from fluctuations in interior and exterior temperatures, humidity and dew point changes, steam from cooking, or boiling large amounts of water on the cooktop. Shower usage also produces condensation.
- If the fan fails to operate, check for either a blown fuse in the domestic fuse panel or the 6-amp fuse on the fan.
- To clean the screen, remove the eight screws holding it in place. Wash the screen using a non-abrasive soap and water. Re-install the screen and tighten the screws.
- Keep all the vents closed when using the Fantastic Fan Vent. Direct the airflow by slightly opening the window(s) on the shaded side of the motorhome to obtain the maximum airflow, especially on hot, sunny days. Close all the roof vents. The area between the open window(s) and the Fantastic Vent supplies the maximum airflow and provides the most comfort.

**NOTE: Do not leave the vent cover open while the motorhome is stored or unattended for extended periods. High winds, other unusual conditions or obstructions may prevent closing. The resulting leakage could cause serious damage.**

## Bathroom Fan

The motorhome is equipped with roof air vents which are manually operated. The vent is opened or closed by simply turning the crank handle in the desired direction. The fan, which is for ventilation only as it will not help cool the motorhome. The power fan is operated by pushing the small power button. The vent must be opened before using the power fan. To close the power air vent, push in the power button to stop the fan and close the vent.

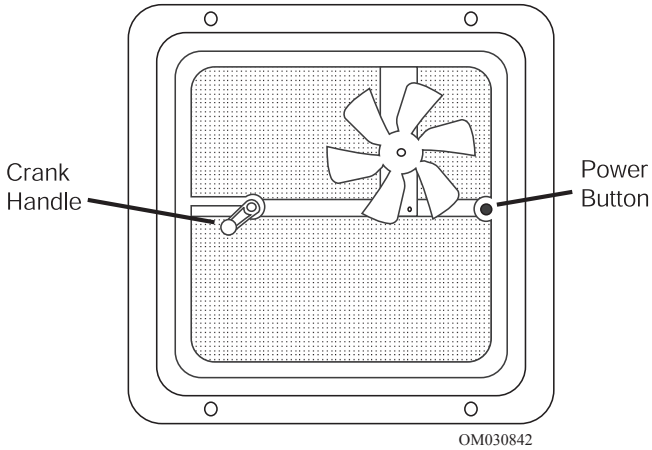


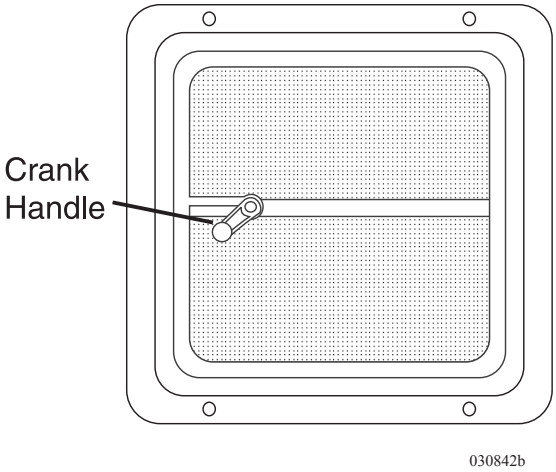

## DOOR - SLIDING

The sliding pocket door uses two rollers at the top of each door. During the life of the motorhome the sliding door may need adjusting. The sliding pocket door can be adjusted to close tight against the wall. Locate the small wrench and turn the adjusting screw upward or downward.

If, for any reason, the pocket door needs to be removed, locate the portion that is secured to the top of the pocket door and rotate the small lever outward to release the latches.

**The pocket door rollers should be lubed with just a small drop of oil once a year to help increase the life of the rollers and improve the sliding of the door.**

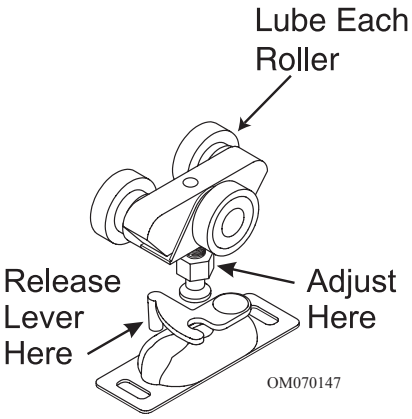

The sofa hide-a-bed will convert easily into a bed. Clear the area of obstruction and debris. The sofa comes equipped with safety belts to be worn if occupied during travel.

**Sofa to Sleeper:**

- Remove the three seat cushions to access the hide-a-bed. The seat cushions should be stored safely until the bed is converted back to a sofa.
- Release the lock on the right side of metal bar, grasp the front metal bar and lift up pulling out on the bar slightly until the leg of the bed is firmly resting on the floor.
- Fold seat belts out of the way.
- When the legs of the bed are firmly on the floor there will be another lifting bar exposed to complete the conversion process.
- Grasping and opening the lifting bar will open the bed fully. The bed is now ready for linen.

**Sleeper to Sofa:**

- Remove all bedding from the hide-a-bed.
- Grasp the foot of the hide-a-bed in the center using the metal lifting bar.
- Fold over the bottom portion of the bed that will form the seat.
- Lift the front portion of the lifting bar to raise and lower the hide-a-bed back into the sofa base.
- Position the seat belts for use.
- Replace the seat cushions.

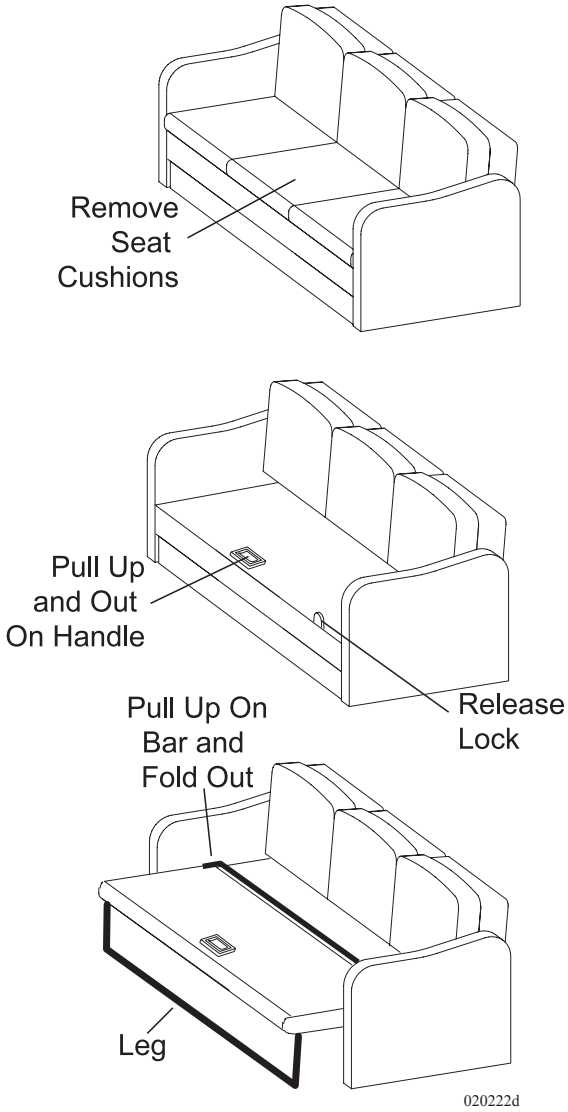

## *Easy Bed w/Drawer (Optional)*

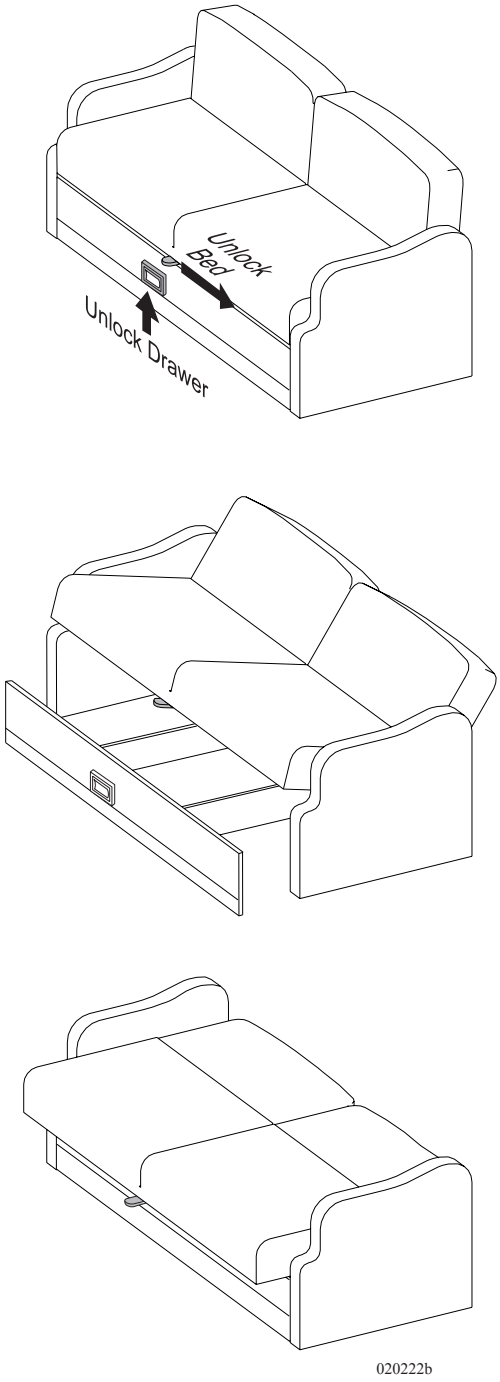


The sofa will convert easily into a bed. The sofa comes equipped with safety belts and these should be used if occupied during travel.

**Sofa to Sleeper:**

- Slide the lever forward to release the locking mechanism.
- Raise the sofa seat base until seat base and backrest form a “V” shape by lifting up from the center of sofa just below the seat cushions.
- Push down on seat base until the seat base and back-rest are flat.
- Fold seat belts out of the way.

**Sleeper to Sofa:**

- Lift the seat base up until seat and back rest are in a “V” shape.
- Push down on seat base.

**WARNING: Do Not use the sofa for transporting infants or children that require safety seats or booster seats.**

**Storage Compartment:**

**Open:** Lift the handle latch up, releasing the lock mechanism and pull the storage drawer forward.

**Close:** Push the storage drawer until the lock mechanism catches the latch.

The Air Mattress inflates and deflates in a matter of a few seconds. Inflating the mattress is accomplished by using an electric pump. The pump operates from any 120 Volt AC outlet.

**To Inflate the Mattress:**

- Open sofa and allow the mattress to lie flat.
- Unzip the corner of the mattress labeled “Air Pump Access”.
- Ensure the valve is locked securely in place.
- Remove the cap from the valve by squeezing the tabs on each side of cap.
- Place the pump into the valve and turn pump ¼ turn clockwise to lock pump into valve.
- Plug in the pump motor to inflate to a desired firmness.
- Remove the pump, reinstall the cap on the valve and zip the “Air Pump Access” cover closed. The bed is now ready for linen.

**To Deflate the Mattress:**

- Remove bedding items.
- Unzip the corner cover of the mattress labeled “Air Pump Access”.
- Press tab on the side of valve and pivot valve up to release the air in mattress.
- Once mattress is deflated allow valve to rest loosely on valve seat, DO NOT LOCK VALVE CLOSED.
- Zip the “Air Pump Access” cover closed and close the sofa.

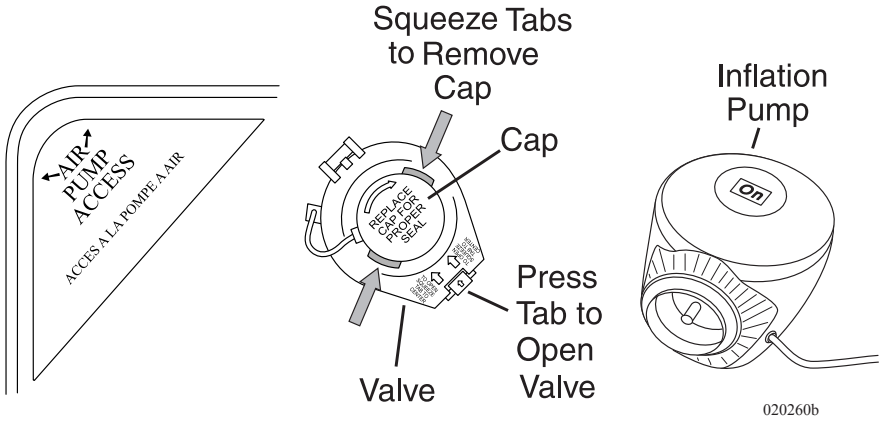

## *Electric Sofa Bed (Optional)*

The sofa will convert easily into a bed. Clear the area of obstruction. The sofa comes equipped with safety belts and these should be used if occupied during travel.

**Sofa to Sleeper:**

- Unlock latch at bottom center of sofa and pull bed extension frame out all the way.
- Lift bed extension cushion up and pull out all the way to lock into extension frame.
- Push switch on sofa arm to position back and bottom cushions flat against the bed extension cushion.

**Sleeper to Sofa:**

- Push switch on sofa arm so that back and bottom cushions are in the sofa position.
- Push in and down on the bed extension cushion to place cushion in stored position on frame.
- Push bed extension frame under sofa into locked position.
- Position seat belts for use.

## FLIP UP TABLE

**To Extend Table:**

- Lift bottom of table and push table leg lock to release the support leg.
- Raise the table top and lower support leg so that it locks in a vertical position.
- Lower table.

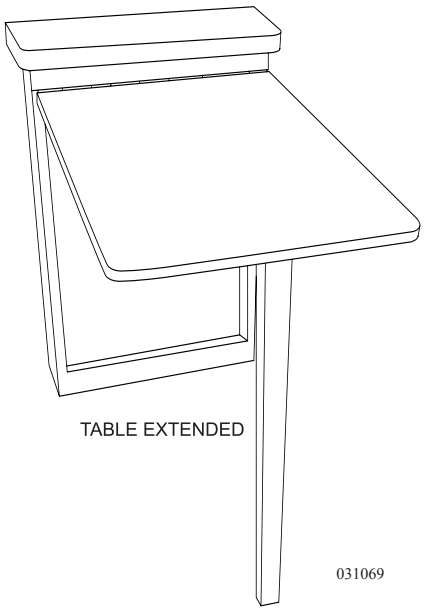

**To Store Table:**

- Lift table up and push table leg lock to release support leg.
- Fold support leg against bottom of table top so that it locks in stored position.
- Lower table top into stored position.

031068

## BOOTH DINETTE
### *Bed Conversion (Optional)*

- Lift or remove the seat cushions to permit the table to swing down into position.
- With a firm grip, lift front edge of the table approximately six inches and push table leg lock to release the support leg.
- Swing the table leg up locking the leg into the horizontal position.
- Continue lifting table until table stays are clear of retainers. Pull outward and lower table down.
- Use both seat cushions and one back cushion for a mattress. Leave one back cushion in a vertical position.

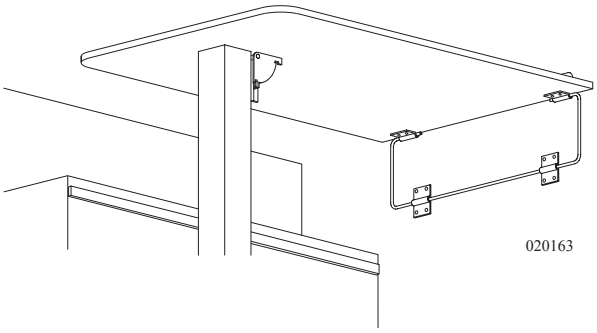

020163

**WARNING: Do not occupy the booth dinette, if not equipped with safety belts or the dining chairs while the motorhome is in motion. To avoid personal injury to occupants in case of a crash or sudden stop, chairs must be stored in an enclosed area or secured with tie down straps while the motorhome is in motion.**

### *Free Standing Table Leaf Extension*

- To add table top leaf, unlock and slide table top all the way against stop.
- Lift leaf from storage compartment and place it on rails.
- Slide top and leaf against wall.
- Reverse procedure to store table top leaf.

## STORAGE UNDER BED

To use the storage compartment located under the bed, locate and unlock the bed deck latches. Lift up the bed by the front edge of the mattress platform. Gas struts hold the mattress and platform open.

**NOTE: Do not over stress gas struts by rapidly opening or closing the bed access cover, as this action can damage the struts or mounts. In extreme cold gas struts may not hold the mattress platform in the open position.**

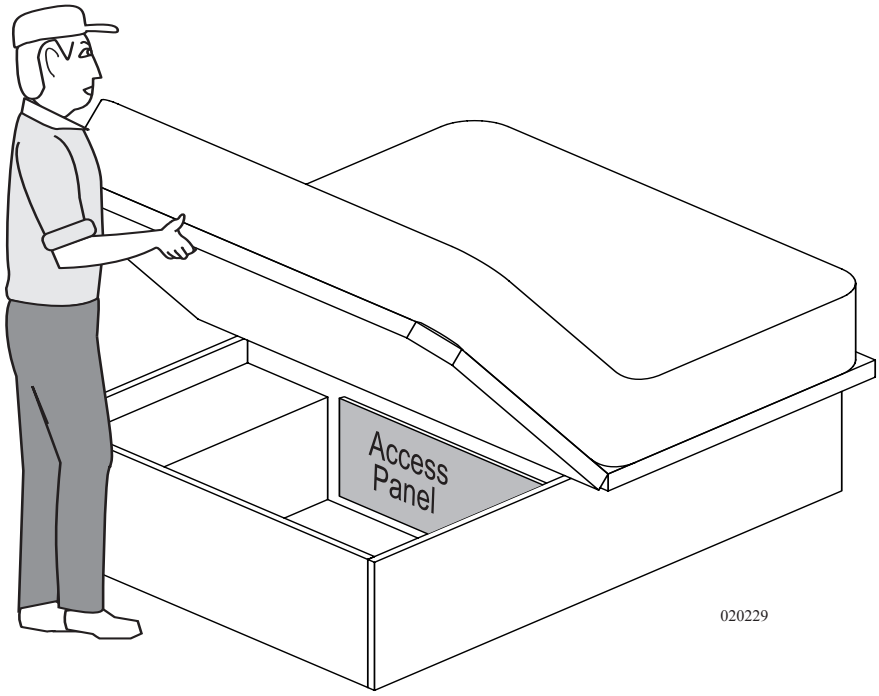

## ENTERTAINMENT SYSTEMS

The components used to make up the entertainment center are carefully selected to provide the highest quality in audio and visual enjoyment. There are several pieces of equipment, which encompass the entertainment center. The following paragraphs will discuss the operations and various components. Use the instructions given in the Video Selector Box section to use these components.

### *Video Cassette Recorder (VCR) (Optional)*

The motorhome is equipped with a standard VCR hook-up. The videocassette recorder is the same one found in most homes. The VHS Compatibility allows recording and playing back programs on standard VHS tapes. The Audio/Video Input Jacks in the front allows for quick, easy connections of additional video equipment. To play a video refer to “Video Selector Box” in this section.

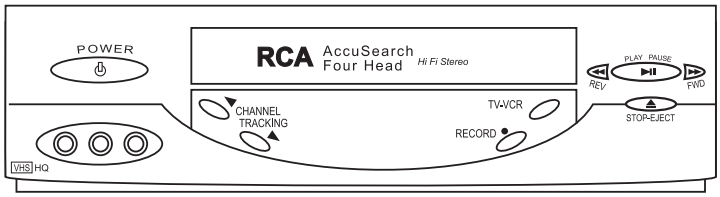


030977

### *DVD Player (Optional)*

The Digital Video Disc player is located above the driver’s seat. The DVD player operates from 120 Volt AC powered from the house electrical system. To play a DVD refer to “Video Selector Box” in this section.

**For more detailed information and operating instructions refer to the manufacturer’s manual.**

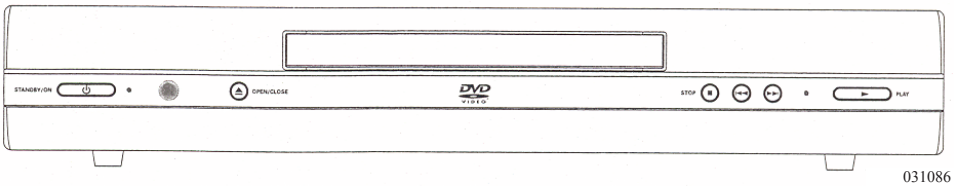


031086

### *Television (Front) with Lock-out Feature*

The main TV has a lockout circuit. Simply stated, the ignition switch controls the front TV power outlet. Only with the ignition OFF will the front TV operate. No other television set will be affected by the lock-out circuitry. The TV operates on 120 Volt AC power only. This power can be provided by shore power, the generator or the inverter. Viewing time of the front TV from the inverter depends on the state of charge of the house batteries and any additional 12 Volt DC circuitry which is being operated.

## Television Antenna

The television antenna is a manual crank up style antenna with built in electronics that use 12 Volts DC to "boost" signal strength. Signals that are weak or fuzzy can be amplified by turning on the boost switch in the passenger front overhead cabinet. The antenna and booster work together to provide the best possible picture for most situations. Certain conditions occur when no amplification is needed, and in fact may make the picture worse. The television station will send a signal that resembles the waves or rings of water from a rock thrown into a still pond. The radiating television signal can hit an object such as a mountain and come back. The result one sees in the television picture is a double image. The antenna will receive a signal from the initial pass, then receive an additional signal from the rebound resulting in a split or double image. In this case, the picture may be improved by no amplification or even lowering the antenna.

**NOTE: Moving the motorhome with the antenna in the raised position, can cause damage from tree limbs or wires.**

**WARNING: Before raising antenna make an outside, visual inspection for any obstructions or overhead electrical wires. Damage to the antenna, severe shock, personal injury or death can occur from inadequate clearance.**

**To Raise the Antenna:**

- Rotate the crank handle clockwise to raise the antenna (it is approximately 14 ½ turns).
- Pull down on the outside directional wheel and rotate the antenna until the best picture is obtained. The directional wheel is spring loaded.

**WARNING: Do not raise a TV antenna near overhead electrical wires as contact may cause serious injury or death. The motorhome must not be driven with the antenna in a raised or partially raised position. Worm gear or worm breakage may result.**

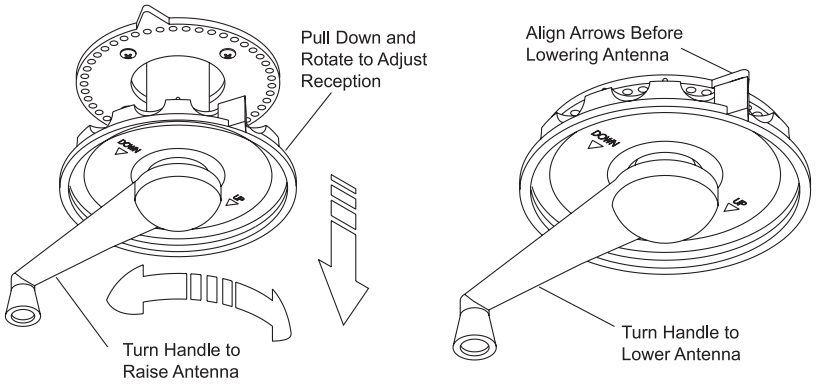


OM130024

**To Lower The Antenna:**

- Pull down on the directional wheel and align arrows together.
- Rotate the crank handle counterclockwise to lower the antenna fully into the cradle. Make an outside visual inspection to ensure the antenna is properly stowed.

**Troubleshooting the Coax Wire:**

Weak or no picture can indicate a possible shorted or open coax. The coax cable is made of two conductors. A center conductor which is usually copper and the ground which is woven or braided aluminum. The "die-electric" insulating material separates the two conductors. The ground and center conductors are to remain electrically separate from one another. When installing a metal end onto a coax cable, use care so none of the woven ground strands comes in contact with the center conductor. A continuity tester is required to test a suspected fault in a coax wire. Unscrew both ends of the suspected bad coax run, with the continuity tester check between the center conductor and the outside threaded ring. If continuity is present, the coax is shorted. To test for an open connection of a particular coax run use one test lead and touch the threaded end of the coax. With the other test lead, touch the threaded ring at the opposite end. Continuity should be present. Perform the same test procedure on the center conductor. Proper electrical coax operation should indicate continuity from the center conductor at one end to center conductor at other end. Continuity should be present between each coax terminal end. There should be no continuity between the terminal end and center conductor. Though damage does not usually occur from a shorted or open coax cable, picture quality is compromised.

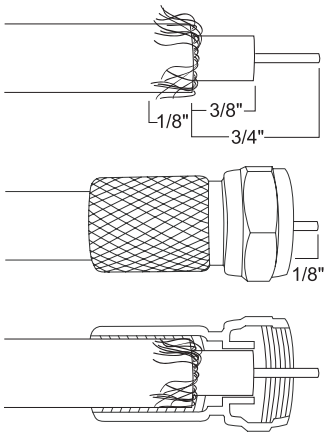

031082

## Hook-ups - TV Cable, Computer & Telephone

The motorhome is equipped with cable TV and telephone hook-ups, located in an outside compartment. For convenience, there are auxiliary outlets located at the co-pilot seat and on the optional computer desk. This connection is set up for a telephone or laptop computer.

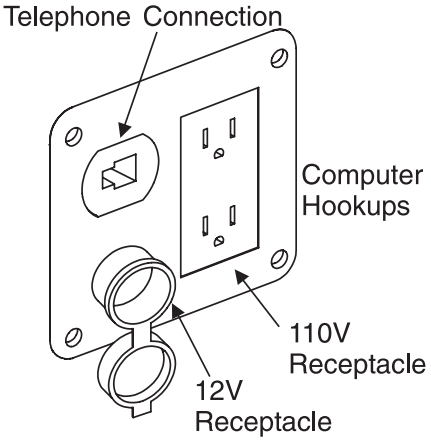

OM030804

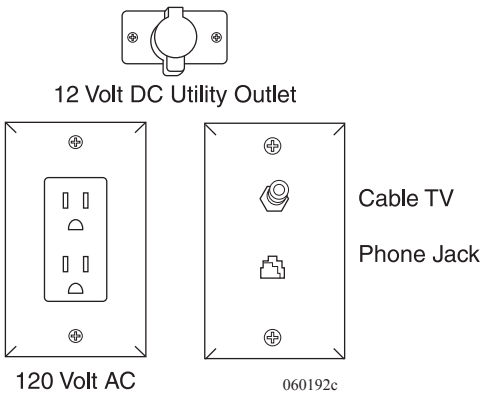

060192c

## Video Selector Box

The motorhome is equipped with a video selector box which has six inputs and four outputs.

**Features Include:**

- Push button controls allow you to send signals from any one of six different inputs to three TVs and VCR.
- Six inputs are Satellite Receiver, TV Antenna, VCR, DVD, Cable TV & Auxiliary.
- 4 Outputs: Main TV, TV2, Exterior TV and VCR.
- Built-in +12 VDC TV antenna power supply eliminates need for separate wall mounted TV antenna power supply.
- Self-resetting fuses used in antenna power supply prevent failure caused by shorted connections.
- Video switch allows for independent viewing of signals at different TVs, with a record option from VCR.

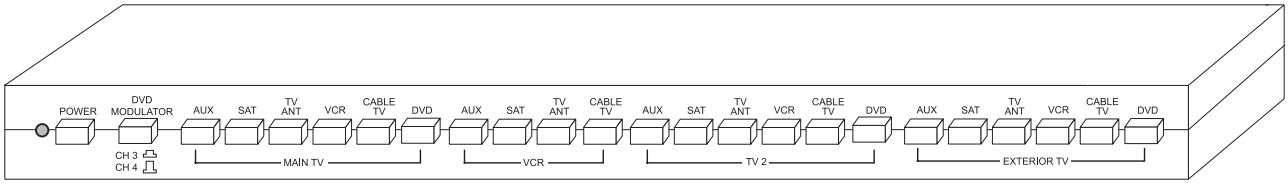


030861c

**To Watch TV Using Antenna:**

To view signals from an amplified TV Antenna, first press the TV antenna POWER button to the ON position. This provides +12 Volt power to the TV antenna amplifier located inside the antenna housing. To view the TV antenna signal on the main TV, simply press the TV ANT button located above the area marked “MAIN TV.” Follow the same procedure for TV 2 or exterior TV. Turn TV ON and select channel.

**NOTE: The picture quality from the outdoor TV antenna varies depending on the location of the TV station in relationship to the location of the TV antenna. If picture quality is degraded and you are not using an external power supply, try turning the TV Antenna Power button located on the control box OFF and ON.**

**To Watch TV Using Cable Signal:**

To view Cable TV signals on the main TV, press the CABLE TV button above the area marked "Main TV." Follow the same procedure for TV 2 or exterior TV. Turn TV ON and select channel.

**NOTE: To view Cable TV signals, you must be connected to a Cable TV input on the outside of the motorhome. Cable TV inputs are available at many of today's campgrounds.**

**To Watch TV using Satellite Signal:**

To view Satellite signals on the main TV, press the SAT button above the area marked "Main TV." Follow the same procedure for TV 2 or exterior TV. Turn TV ON and select channel 3. Use Satellite receiver to select channels.

**To Watch TV using VCR Signal:**

To view VCR signals on the main TV, press the VCR button above the area marked "Main TV." Follow the same procedure for TV2 or exterior TV. Turn TV ON and select channel 3. Turn VCR ON and insert video tape to view.

**To Watch TV using DVD Signal:**

To view DVD signals on the main TV, press the DVD button above the area marked "Main TV". Follow the same procedure for TV2 or EXTERIOR TV. Press DVD MODULATOR button to choose CH3 or CH4. Turn TV ON and select channel to match DVD MODULATOR channel chosen. Turn DVD ON and insert DVD disc to view.

**To View Auxiliary Components using TV:**

To view Auxiliary signals, such as game consoles, camcorder, etc,. on the main TV, press the AUX button above the area marked "Main TV." Follow the same procedure for TV 2 or exterior TV.

**Recording Using VCR:**

To record programming from the Antenna, Satellite Receiver, Cable TV or Auxiliary, simply press the appropriate button above the section marked VCR.

- To record programming from the TV Antenna to the VCR, press the TV ANT button above the VCR section on the switch box.
- To record programming from the Satellite Receiver to the VCR, press the SAT button above the VCR section on the switch box.
- To record programming from an Auxiliary device to the VCR, press the AUX button above the VCR section on the switch box.
- To record programming from Cable TV to the VCR, press the CABLE TV button above the VCR section on the switch box.

## *Satellite System - DSS Prewire (Optional)*

The motorhome is prewired for a roof mount DSS System. The prewire will consist of a ¾” flexible conduit, which will run from the front overhead to a spot marked on the roof. A telephone hook-up will also be provided for Pay Per View accessibility.

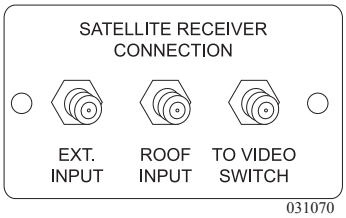


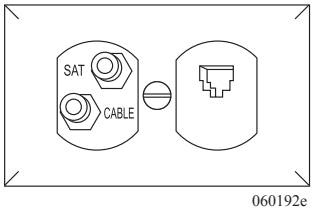


## HOME THEATRE SURROUND SOUND - DVD/CD/TV/VCR/AM & FM TUNER (OPTIONAL)

The Home Theatre Surround Sound System has several speakers located throughout the living room area. The system operates from 120 Volt AC powered from shore power or the generator. The system has a built in AM/FM tuner, ANALOG inputs, DIGITAL inputs and S-VIDEO inputs. The unit also has a remote control for ease of operation.

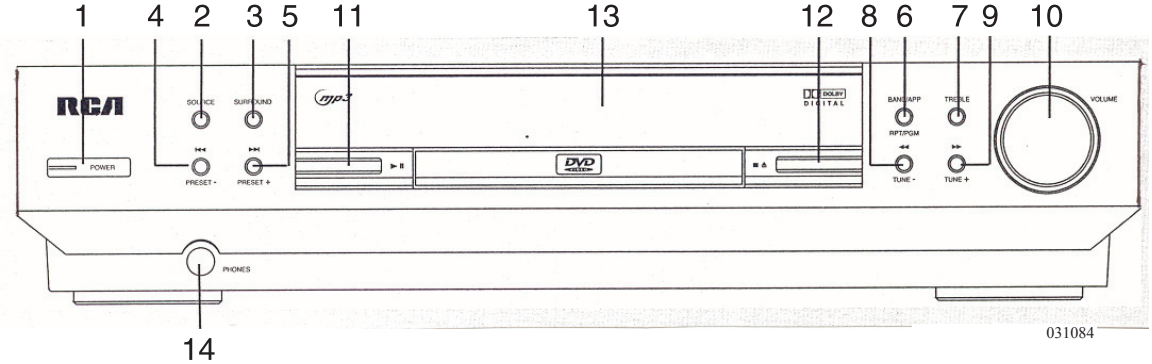


**Operation:**

**1. POWER/STANDBY**

- To turn the unit on/off. When the system is turned on, the unit will go to Standby mode, then press the SOURCE button on the unit to power the unit up in the last mode used.
- When the unit is in standby mode, press the SOURCE button to power the unit on.

**2. SOURCE BUTTONS**

- To select input source. For example, DVD/CD, VCR1 etc.
- Press and hold for delay settings

**3. SURROUND**

- Press repeatedly to select the surround sound setting or Digital Sound Processor (DSP) mode you want.
- Press and hold to activate speaker Test Tone, use the Adjustment buttons on the remote to adjust the settings.

**4. PRESET - / SKIP REVERSE**

- To move back to the beginning/previous memory location in tuner mode.
- To skip to the beginning/previous track in CD mode and the beginning/previous chapter in CD mode (only while playing).

**5. PRESET + / SKIP FORWARD**

- To go to the next preset memory location in tuner mode.
- To skip to the next track in CD mode and the next chapter in DVD mode (only while playing).

**6. BAND/APP/RPT/PGM**

- In tuner mode, press to select between radio BANDS or press and hold to enter AUTO PROGRAM mode.
- In DVD/CD mode, press to select among REPEAT options (only while playing) or press and hold to enter PROGRAM mode (only in stop mode).

**7. TREBLE**

- To adjust TREBLE, press this button and turn the volume knob to adjust level.
- Press and hold for Random function in CD/MP3 playback.
- To increase bass level, increase the subwoofer volume.

**8. TUNE - / FAST REVERSE**

- In tuner mode, press to tune down on the radio frequency or press and hold to search down.
- In CD and DVD mode, press to fast forward.
- In pause mode, press for slow forward.

**9. TUNE + / FAST FORWARD**

- In tuner mode, press to tune up the radio frequency or press and hold to search down.
- In CD and DVD mode, press to fast forward. Press repeatedly to vary the speed of fast forward.
- In pause mode, press for slow forward.

**10. VOLUME**

- Turn the knob to adjust volume level.

**11. PLAY/PAUSE**

- To play and pause DVD/CD playback.

**12. STOP/EJECT**

- To stop DVD/CD playback. Press to eject disc tray.

**13. DISPLAY**

- To display current status of the receiver.

**14. PHONES**

- Plug your headphones (not supplied) into it for your private enjoyment. Speakers will be off when phones are inserted.

## RADIOS
### *Dash*

The dash radio will control the multi-functions for the dash audio. There are many features associated with the dash radio. The tuner will hold pre-set FM stations and AM stations. Turn the radio power OFF at the dash or in the bedroom.

**NOTE: Turning the bedroom radio switch OFF will override the two dash switches.**

**Operation:**

- Turn ON the house battery disconnect switch.
- Turn ON the house battery cut-off switch, located at the entry door.
- Turn ON the radio power switch at the dash panel and bedroom.
- To turn the radio ON, push the ON button.
- To turn the radio OFF, push and hold the ON button for approximately two seconds.

**Additional and detailed information for the dash radio functions and operations can be found in the Owner's Information File Box.**

The radio is powered from 12 Volt DC. The motorhome does not need to be plugged into shore power to operate the system. Operations are performed from the front control panel.

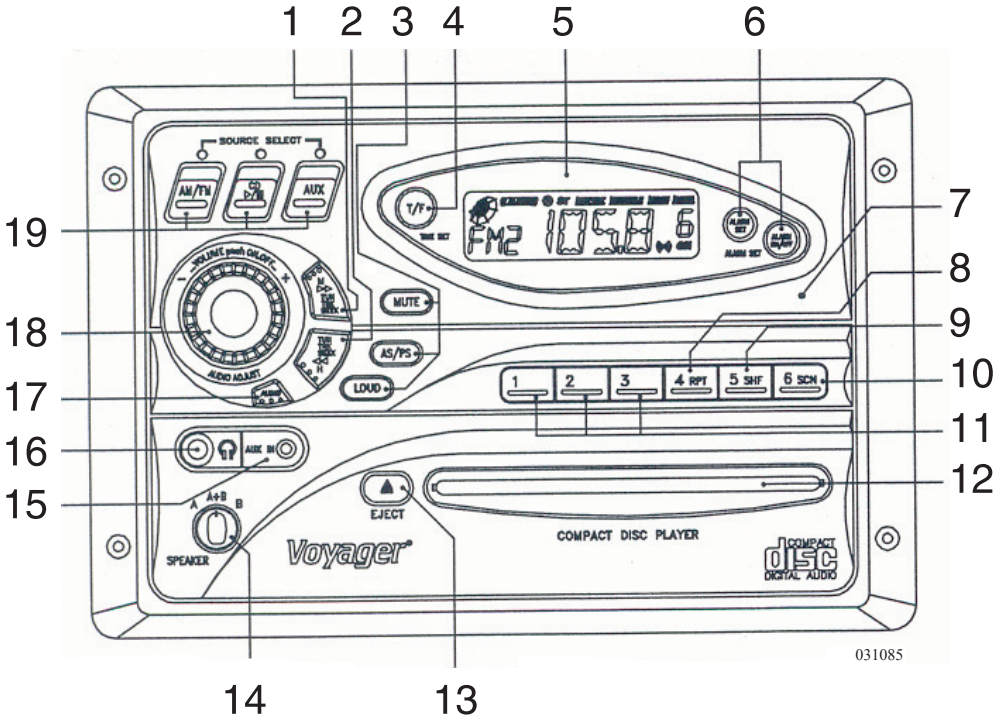


**Operation:**

**NOTE: Number in parenthesis (#) correspond with "Control Identification".**

**Liquid Crystal Display Panel:**

The liquid crystal display (LCD) panel displays the frequency, time and activated functions.

**NOTE: It is characteristic of LCD panels that, if subjected to cold temperatures for an extended period of time, they will take longer to illuminate than under normal conditions. In addition, the visibility of the numbers on the LCD may slightly decrease. The LCD readout will return to normal when the temperature increases to a normal range.**

**Tuner:**
- Turn power on by pushing the Power switch/Volume control button (18).
- Use the Source Selectors (19), select the AM/FM button.
- Use the Speaker Selector Switch (14), to choose between speaker output, headphones or both.
- Use Tuning Up (1) or Down (2) buttons to select station manually. Also, the Station Preset buttons can select stations (this will be discussed later in the manual). Push either of the seek buttons (1 or 2) to tune to the next higher or lower active station.
- Adjust Volume Control (18) to suit taste.

**CD Player:**
- Turn power on by pushing the Power Switch/Volume Control button (18).
- Insert an audio CD into the CD player (12).
- Use the Speaker Selector Switch (14) to choose between speaker output, headphones or both.
- Press the CD eject button (13) to eject any CD's that may be already in the player.
- Press the CD Play/Pause button (the same one as the CD Source Select button).
- You may change tracks by using the Track Up or Track Down buttons (1 or 2).
- To change AM/FM or Aux. inputs, press the corresponding button; to return to CD press the CD button.
- To eject the CD, press the CD eject button (13).

**CD Control Buttons:**
- The RPT button (8) repeats current track.
- The SHF button (9) randomly shuffles the tracks.
- The SCN button (10) scans the first ten seconds of each track.

**NOTE: Power can be turned on by pushing any button on the front of the radio.**

**Auxiliary Input:**
- Push Power Switch (18) ON.
- Using the Source Selectors (19), choose the button labeled "AUX".
- If there is an external source (example: CD shuttle) connected to the Auxiliary In Jacks (22) on the rear of the radio, then you can listen to your external source through the system.
- An external auxiliary source can be also used (such as a portable cassette player) through the Auxiliary Stereo Input Jack (15) on the front of the radio.

**Setting the Clock:**
- Push Power Switch (18) ON.
- Press the T/F button to display clock.
- Hold the T/F button (4) and simultaneously use the H and M buttons (1 and 2) to adjust hours and minutes.

**NOTE: The T/F also toggles between time and radio frequency on the display.**

**Setting Stations into Memory Preset:**
- This unit has the ability to set 18 FM and 12 AM stations into memory.
- To set the AM or FM station into memory, first tune to the desired station.
- Once at the desired station, press and hold preset button (8, 9, 10 or 11) you wish to program for more than 3 seconds.

**Using the Audio Adjust Button:**
- You can toggle between volume, treble, bass and balance control by pressing the Audio Adjust button (17).
- Once at the desired function, you can use the volume knob to adjust.

**Setting the Alarm:**
- Hold the Alarm Set button (6).
- Use the H and M buttons (1 and 2) to adjust hours and minutes.
- The Alarm ON/OFF button (6) activates or deactivates the alarm.

**Beep Feature:**
- Hold the Audio Adjust button to enable the beep feature (17). Lower right side of the display will display an audio symbol when this feature is turned on.
- When this feature is on, turning different features ON or OFF will produce two different tones, higher tone for ON and lower tone for OFF.
- Completely removing power from the unit will turn the beep feature OFF.

**AS/PS Button:**
This button is for Auto-Store tuning (AS) and Preset Scan Tuning(PS) (3).
- Press this button momentarily during radio operation to scan the preset station into the chosen band's memory. The unit will stop at each preset station for approximately five seconds before continuing onto the preset station. Press this button momentarily to stop preset scan operation and remain on selected station.
- Pressing this button for longer than two seconds will activate the Auto-Store Tuning feature which will automatically scan the band and enter up to six strong stations into the preset memories (the indication "AST" will flash on the display to show that the Auto-Store Tuning is in progress). After entering the stations into the memories, the unit will automatically stop at each station for approximately five seconds so each station can be heard.

**NOTE: If you have already set the preset memories to your favorite stations, activating the Auto-Store feature will erase those stations and enter the new strong stations.**

## *Citizens Band Radio - Prewire (Optional)*

A two pin connector labeled Citizens Band Radio is located behind the dash panel. It is taped along with the CB Antenna coax, which is routed to the roof mounted base. The red wire is at 12 Volt DC and is fused at two amps through the front distribution panel. The white wire is connected to the frame.

## EXTERIOR ENTERTAINMENT CENTER (OPTIONAL)

The entertainment center has a AM/FM marine stereo radio with two speakers. The stereo has conformal coated circuit board to withstand salt air and humidity along with UV stable detachable control panel and electronic tuner.

Included are 12V DC, 120V AC antenna receptacles. The locking cover should be closed and locked when the entertainment center is not in use.

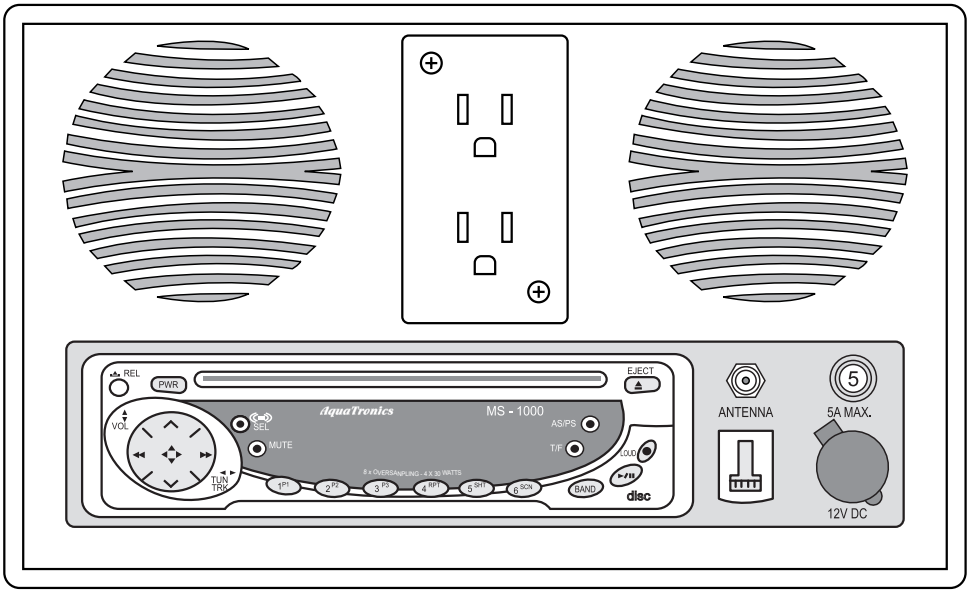


OM020154

**Function of Features:**

- **ON/OFF POWER BUTTON (PWR) -** Press this button to turn the unit on or off.

- **VOLUME/LEVEL CONTROL (VOL) -** To increase the volume level, press the up arrow button. To decrease the volume level, press the down arrow button.

- **SELECT BUTTON (SEL) -** This button is used to select the audio function (volume, treble, bass, balance, or fade) to be adjusted using the Level Control. Pressing the Select button once will set the unit for volume adjustment (“VOL” will appear on the display panel). Pressing the button additional times will select treble (“TRE” on the display), bass (“BAS”), balance (“BAL”), fader (“FAD”) or volume (“VOL”).

- **AUDIO SETTING MEMORIES (P1/P2/P3) -** Three pre-set buttons are provided on this unit to store desired audio level positions into memories which can be easily recalled. To set any of the 3 audio memories, use the following procedure:

1. Use the Select button and Level control to adjust the setting of the volume, treble, bass, balance and fader to the desired positions.
2. Press the Select button to call any of the audio functions on the display. Within 2 seconds of pressing the Select button, and while the audio function is still on the display panel, press the pre-set button (1 through 3) to be set and continue to hold it in. After approximately 2 seconds, the pre-set number ("P-1", "P-2", or "P-3") will appear on the display panel indicating that the audio levels are now set into that memory position. The settings can be recalled at any time by pressing the Select button and then the pre-set button within 2 seconds.

- **AUDIO MUTE (MUTE) -** This button is used to mute the volume from the system. By pressing the button, the indication "MUTE" will appear on the display panel and the volume will be muted. Pressing the Mute button again will return the volume level to the setting in use before the Mute function was activated.

- **AM/FM BAND SELECTOR (BAND) -** During radio operation, each momentary press of this button will change the radio band. The indication "AM1", "AM2", "FM2", or "FM3" will appear on the display panel according to your selection.

- **MANUAL UP/DOWN TUNING & AUTOMATIC SEEK TUNING (TUN) -** Each time the right arrow button is tapped, the radio will tune one frequency step higher. Similarly, each tap of the left arrow button will tune one frequency step lower. To manually tune in a station, tap the button of the appropriate direction until the desired frequency is reached. Pressing either button for longer than 0.5 seconds and then releasing will activate the Automatic Seek Tuning function. The radio will seek the next available station and stop at the frequency. The Seek function can be stopped by pressing the button again or activating any other tuning function.

- **AUTO-STORE TUNING (AS) & PRE-SET SCAN TUNING (PS) -** During radio operation, press this button momentarily to scan the 6 stations pre-set into the memories of that band. The unit will stop at each pre-set station for 5 seconds before continuing to the next pre-set station. Press the button again momentarily to stop Pre-Set Scan operation and remain on the selected frequency. Pressing the button for longer than 2 seconds will activate the Auto-Store Tuning feature which will automatically scan the band and enter up to 6 strong stations into the 6 pre-set memories.

- **STATION PRE-SET MEMORIES -** To set any of the 6 pre-set memories in each band, use the following procedure:

1. Turn the radio on and select the desired band.
2. Select the first station to be pre-set using the Manual Up/Down or Automatic Seek Tuning controls.
3. Press the pre-set button to be set and continue to hold it in. After approximately 2 seconds, the pre-set number will appear on the display panel, indicating that the station is now set into that pre-set memory position. The station can now be recalled at any time by pressing that button.
4. Repeat the above procedure for the remaining 5 pre-sets on that band and for the other 4 bands on the unit.

- **DISC SLOT -** With the label surface facing up, gently insert the disc into the slot until the soft-loading mechanism engages and disc play begins.

- **TRACK SELECT (TRK) -** These buttons are used to quickly select the beginning of a particular track. With each momentary tap of the Forward Track Select button (right arrows), the next higher track number will be selected as shown on the display panel. Similarly, with each momentary tap the Backward Track Select button (left arrows), the next lower track number will be selected.

- **CD PLAY/PAUSE SELECTOR (II) -** During disc play, press this button to temporarily stop play of the disc. Press the button again to resume play of the disc from the point at which it was stopped.

- **REPEAT PLAY SELECTOR (RPT) -** During disc play, press this button to repeat the play of the selected track ("RPT" will appear on the display panel). Play of the track will continue to repeat until the button is pressed again.

- **SHUFFLE PLAY SELECTOR (SHF) -** During disc play, press this button to play the tracks on the disc in a random shuffled order ("SHF" will appear on the display panel). The Shuffle Play mode can be cancelled by pressing the button again.

- **TRACK SCAN (SCN) -** During disc play, press this button to play the first 10 seconds of each track on the disc ("SCN" will appear on the display panel). When a desired track is reached, press the Scan button again to cancel the function and play of the selected track will continue.

- **DISC EJECT (UP ARROW) -** Disc play is stopped, the disc is ejected and the unit will change to radio operation by pressing this button.

- **TIME/FREQUENCY SELECTOR (T/F) -** This unit can be set so that either the clock time or radio frequency/CD player functions will normally appear on the display panel. Pressing the Time/Frequency Selector button when the radio frequency or CD player tack indication is shown will change the display to show the time. Pressing the Time/Frequency Selector button will change the display to show the radio frequency/CD player indication.

- **FRONT PANEL RELEASE BUTTON -** This button is used to release the mechanism that holds the front panel to the chassis. To detach the front panel, press the button so that the left side of the panel is released. Grasp the released side and pull it off the chassis. To re-attach the panel, position the right side of the panel in place first and then press the left side of the panel until the mechanism locks it into place.

## ~ NOTES ~

# *LaPalma - Water Systems*


**WATER SYSTEMS - INTRODUCTION.....247**
**MONITOR PANEL.....247**
Measurement & Calibration.....247
**SERVICE CENTER.....248**
**WATER TANK - FRESH FILL.....248**
**WATER TANK - FRESH GRAVITY FILL.....249**
**WATER - CITY HOOK-UP.....249**
**WATER PUMP.....250**
Water Pump - Troubleshooting.....251
**WATER FILTER - FAUCET.....252**
**WATER SYSTEM.....252**
Troubleshooting.....252
Faucet Screens.....253
Disinfecting Fresh Water.....253
**TANK CAPACITIES - CHART.....254**
**WASTE WATER SYSTEMS.....254**
Proper Waste Disposal.....254
What Not to Put into the Holding Tanks.....255
Waste Drain & Sewage Tanks.....255
Waste Drain Hose.....256
What to Put into the Holding Tanks -
Black Water Tank.....257
What to Put into the Holding Tanks -
Grey Water Tank.....257
Black Tank Flush.....257
**TOILET.....259**
Operation.....259
Cleaning.....259
Maintenance.....260
Drain Traps & Auto Vents.....261
**COLD WEATHER CONDITIONS.....262**
**STORAGE - COLD WEATHER.....263**
**WINTERIZING.....263**
Using Air Pressure.....263
Using Non Toxic Antifreeze.....265

## WATER SYSTEMS - INTRODUCTION

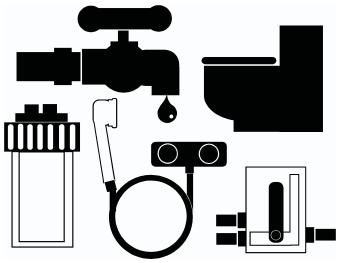

watersys.eps

This section contains information and knowledge for the operation and care of the various water systems found in the motorhome. The motorhome is equipped with a fresh water system and a waste water system(s). Optional water equipment will also be discussed, so not all information may be applicable to your motorhome. More detailed information with **CAUTION** or **WARNING** instructions for the various equipment, other than what is found in this section, can be found in the manufacturer's manual in your owner information box.

It is hard to imagine how much water is used by the average person everyday. Newcomers to a self-contained motorhome soon discover water does not last long unless consumption is drastically reduced. For example, less water can be used for showering if the shower is turned off while soaping down, then turned back on to rinse. This way a good shower uses a couple gallons of water or less. There is plenty of water to meet personal needs once habits are adjusted.

**Fresh Water System:**

The fresh water system consists of: fresh water tank, water pump, gravity fill connection, water filters and a city/fresh water connection.

Blue tubing is used for all cold water lines throughout the motorhome. Red tubing is used for all hot water lines throughout the motorhome.

Use a water hose that is marked for potable water use only. Care of the hose is a must. **After each use, drain the water hose and coil the hose neatly. Attach the ends together to keep dirt, debris and insects out of the hose.**

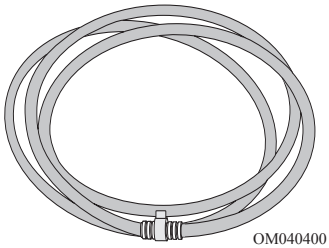

OM040400

**Waste Water System:**

The waste water system consists of: a waste holding tank (grey water), a sewage holding tank(s) (black water), flush system, toilet and drains.

**NOTE: Some model units have two toilets and multiple holding tanks.**

## MONITOR PANEL
### *Measurement & Calibration*

The motorhome is equipped with a monitor panel to aid in managing the storage tanks. The monitor panel is located in a main Status Monitor Panel in the hallway. The switch marked **TEST** is a momentary switch which requires being held down while testing the level of storage tanks. Some units will have only one storage tank. If applicable, use switch to choose Bath 1 or Bath 2 storage tank during level test. Read the scale for the desired storage tank that is to be monitored. Each scale uses colored lights along with a corresponding scale reading. The lights and scale indications are as follows:

- Green lamps indicate good or normal ranges.
- Amber lamps indicate fair or partial ranges.
- Red lamps indicate full or empty ranges (depending on the scale), which are in the critical range.

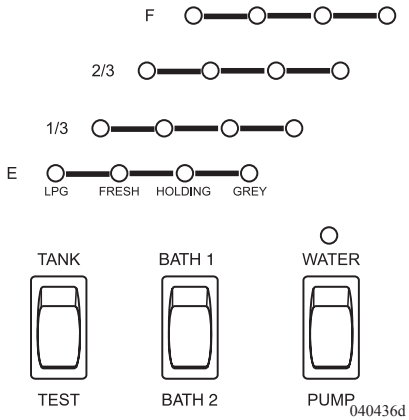


040436d

## SERVICE CENTER

The service center water controls are used for performing all tasks pertaining to water usage in the motorhome. Service center is located in an outside compartment of the motorhome.

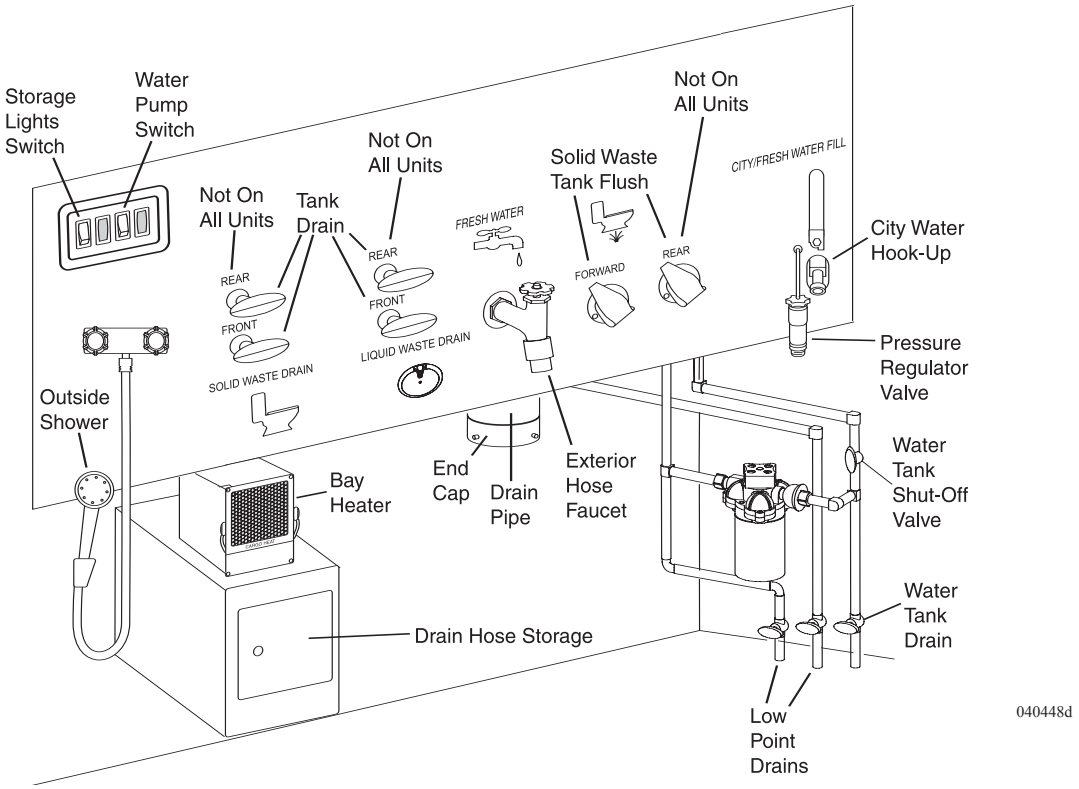


## WATER TANK - FRESH FILL

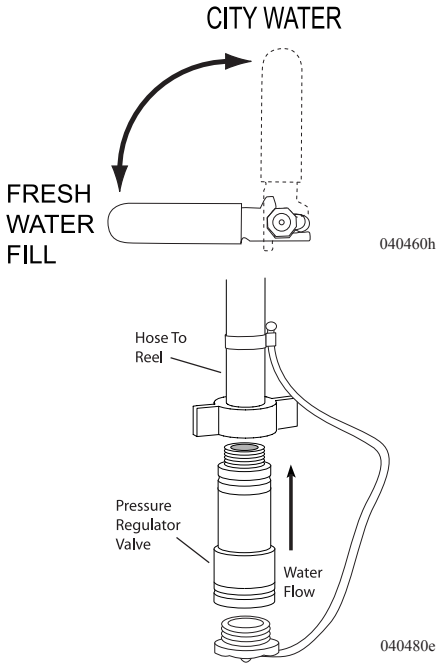


1. Check to make sure the fresh water tank drain valve, located on roadside in the service center, is in the closed position.
2. Connect the hose labeled for potable water to the water source. Install the provided pressure regulator on the fill valve. Arrow on regulator must be pointed toward valve. On a hot day the hose may expand and burst from water pressure within the water hose.
3. Remove white plug in the end of the pressure regulator.
4. Connect the water hose to the pressure regulator inlet.
5. The fill valve should be in the Fresh Water Fill position.
6. Turn on the water at the water source. The water should be audible as the fresh water tank fills.

7. Locate the monitor panel. Locate the switch marked test. The switch is a momentary switch that requires being held in position while testing the level in the fresh water tank. Read the scale as the fresh water tank is filling. When the 2/3 tank light illuminates it should not take much longer to finish filling the tank. Do not leave motorhome unattended while filling the fresh water tank. The light marked “F” should start to blink as a warning that the fresh water tank is almost full. Return to the service center. When the fresh water tank is full water will come out an overflow vent above the gravity fill cap.
8. Turn off water supply as quickly as possible.
9. Return fill valve handle to “city water.”

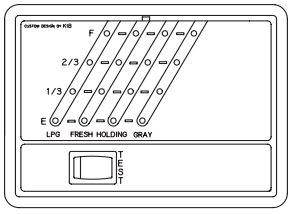

Service Center Tank Monitor (Optional)

OM040505

## WATER TANK - FRESH GRAVITY FILL

The gravity fill inlet allows fluids to be introduced directly into the fresh water tank. When dry camping water can be poured directly from a container into the fresh water tank. The gravity fill inlet can be used to pour disinfecting solution into the fresh water tank or when using potable RV antifreeze to winterize the fresh water system. Use only potable water sources, solutions and delivery systems when using the gravity fill inlet.

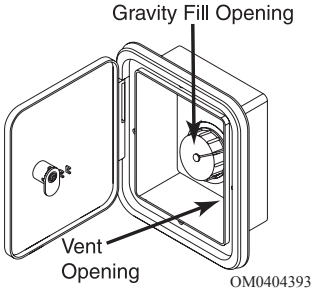

OM0404393

**Filling the Tank:**

1. Unscrew fill cap taking care to keep cap and inlet clean.
2. Insert potable water hose into inlet.
3. Fill tank until water overflows from inlet.

**NOTE: When filling tank do not leave hose unattended.**

## WATER - CITY HOOK-UP

When connecting the motorhome to fresh water, use a hose manufactured and labeled for potable water to ensure that the hose will not flavor the water.

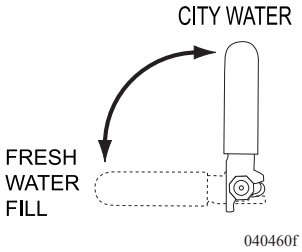

040460f

1. Install the provided pressure regulator on the fill valve. Arrow on regulator must be pointed towards valve.
2. Remove white plug from the end of the pressure regulator.
3. Connect water hose to the city water inlet.
4. Valve handle should be in the city water position.
5. Turn on water at water source.
6. The water pump can either be in the OFF position or in the ON position. It will not affect the water pump to leave it on.
7. Open each faucet, one at a time, to rid any trapped air inside the pipes.

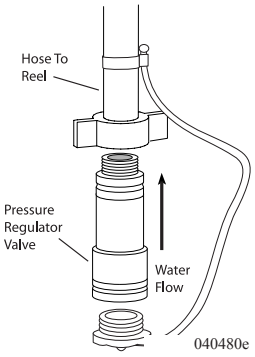

040480e

**CAUTION: Some water sources develop high water pressure, particularly in mountainous regions. High water pressure is anything over 55 psi (pounds per square inch). Excessive water pressure may cause leaks in water lines and/or damage the water heater.**

## WATER PUMP

The water pump is used to pressurize the fresh water system when not connected to city water. The water pump is totally automatic and self-priming, operating on demand as water is used.

The water pump is located in the outside control compartment of the motorhome.

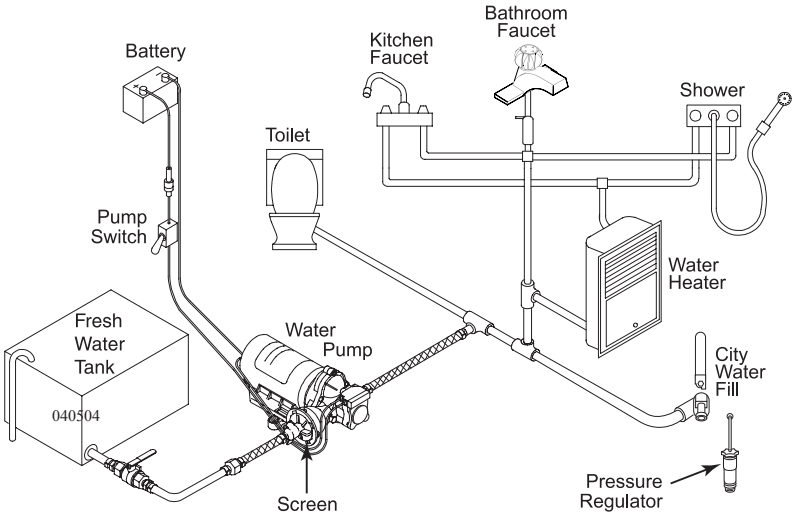


**WARNING: Before leaving the motorhome for extended periods of time (i.e. overnight or longer) be sure that the city water and all water pumps have been turned off. Damage from neglect will be responsibility of the owner and not the manufacturer.**

To operate the water pump, momentarily press the water pump switch. The light indicates the water pump is on. The remote switches are located on the system panel in the hallway and on the outside water control panel. To turn pump OFF, momentarily press the water pump switch.

Do not allow the pump to run when the fresh water supply tank is empty. Continued operation with a dry tank may open an electrical circuit and/or damage the water pump.

**To Start Pump After Unhooking City Water Supply or First Time use Proceed as Follows:**

- Fill the fresh water tank.
- Open all valves and faucets except the drain valves. This includes hot and cold water valves, all faucets and the shower.
- Turn the water pump on. Wait for the water lines and the hot water tank to fill.
- Close each faucet when it delivers a steady stream of water (cold water faucets first).

Vibration induced by road conditions can cause the plumbing or pump hardware to loosen. Check for system components that are loose. Many symptoms can be resolved by simply tightening the hardware. Check the following items along with other particulars of the system.

**The Water Pump Will NOT Start/Blows the Circuit:**

- Check the electrical connections, fuse, breaker, main switch and ground connection.
- Is the motor hot? The thermal breaker may have triggered. It will reset when cool.
- Is the voltage present at the switch? Bypass the pressure switch.
- Does the pump operate? Check the charging system for correct voltage and check the pump for the proper ground connection.
- Look for an open or grounded circuit or motor.
- Check for seized or locked diaphragm assembly (water frozen).

**The Water Pump Will NOT Prime/Sputters (No Discharge/Motor runs):**

- Is the strainer clogged with debris?
- Is there water in the tank, or has air collected in the hot water heater?
- Is the inlet tubing/plumbing sucking in air at plumbing connections (vacuum leak)?
- Check for proper voltage with the pump operating.
- Look for debris in the pump inlet/outlet valves or dry/swollen valves.
- Check the pump housing for cracks or loose drive assembly screws.

**The Water Pump Will NOT Shut-off/Runs When the Faucet is Closed:**

- Make sure the fresh water tank fill valve is completely closed.
- Check output side (pressure) plumbing for leaks and inspect for a leaky toilet(s) or valves.
- Look for loose drive assembly or pump head screws.
- Are the valves or the internal check valve held open by debris or is the rubber swollen?

**The Water Pump is Noisy or Rough in Operation:**

- Check for plumbing which may have vibrated loose.
- Does the mounting surface multiply noise (flexible)?
- Check for mounting feet that are loose or compressed too tight.
- Look for loose pump head to motor screws (three long screws).
- Is the motor with the pump head removed? Is noise coming from the motor or pump head?

**The Water Pump is Rapid Cycling:**

- Look for restrictive plumbing/flow restrictors in the faucets or shower heads.

## WATER FILTER - FAUCET

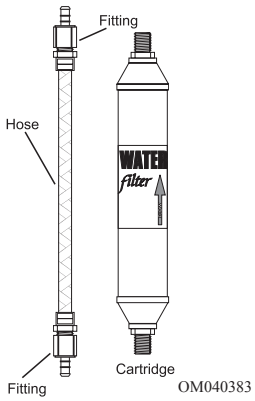


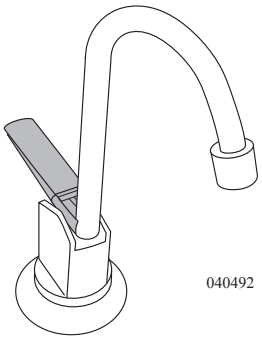


The motorhome is shipped with a diverter hose in place of the in-line water filter. To initially install a water filter or to replace a water filter, use the procedures as follows:

- Locate the water filter diverter hose in the galley sink area.
- Remove the top and bottom fittings from either the hose or filter.
- Connect top and bottom fittings to the filter to purify the system.
- Store diverter hose for use when winterizing the water system.

A fresh replacement cartridge is needed when the flow of water from the faucet becomes slow. The life of the filter depends upon incoming water conditions and water consumption.

As water passes through the water filter, dirt particles are trapped in the tiny pores of the micro-pure coating on the filtering element inside the cartridge. As the cartridge removes the impurities from the water, its microscopic pores slowly permeate and the amount of water flowing from the cartridge gradually decreases.

When the flow of water from the water filter becomes too slow for convenience it requires servicing. If the cartridge is not changed the flow will eventually stop. Even when a decreasing water flow does not demand the cartridge be replaced, it is recommended the filter be replaced at least once a year for continued reliable performance from the purification system.

**NOTE: Change the filter at least once a year.**

## WATER SYSTEM *Troubleshooting*

Water system problems and leaks usually fall into two categories: system problems and problems caused by improper use or lack of attention. These problems usually stem from improper winterizing, poor maintenance, road vibration and campsite water pressure variations.

Check all plumbing connections for leaks at least once a year. If the water pump runs when a faucet is not open, check for a water leak. Be sure the tank(s) drain valves are closed. If the system(s) continues to leak take the motorhome to an authorized dealer for service.

## Faucet Screens

Fresh water sources will vary by location. Build up lime deposits or debris on the faucet screens will restrict or plug the flow of water coming from the faucets. All faucet screens should be checked and cleaned every two weeks of use.

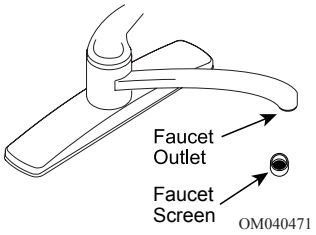


- Faucet screens are normally located on the outlet side of the faucet and held in place with a threaded collar.
- Remove screen from faucet.
- Clean screen using a small soft brush and a de-liming solution.
- Reinstall screen and check water flow.

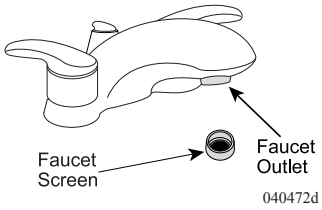


## Disinfecting Fresh Water

Disinfecting the water system with chlorine bleach (superchlorination) protects you and your family from bacteriological or viral contamination from any common water source.

**Disinfect the Water System:**

- If the motorhome is new.
- If the motorhome has not been used in a long time.
- Every **three** months.

**NOTE: The gravity fill is used to perform the task. Remove cap off the gravity fill. Add the solution to the fresh water tank(s). When finished, secure the gravity feed cap.**

**Use Following Procedure to Disinfect Water System:**

- Remove water filter element and replace with diverter hose.
- Prepare a chlorine bleach solution using 1 gallon water and ¼ cup of chlorine bleach. Use 1 gallon of solution for every 15 gallons of tank capacity. Example: Add 2-2/3 gallons solution to a 40 gallon tank. Add 4-2/3 gallons solution to a 70 gallon tank. Add 6-2/3 gallons to 100 gallon tank. This mixture puts a 50 ppm (parts per million) residual in the water system, and acts as a quick-kill dosage for harmful bacteria, viruses and slime-forming organisms. Concentrations higher than 50 ppm may damage the water lines and/or tanks.
- Turn the water pump OFF.
- Drain the fresh water tank. Water tank drain is located in the outside water control compartment. Close the drain and poor the solution into the fresh water tank using the gravity fill and a funnel.
- Turn the water pump ON. Open each faucet, in turn, and run the water until you smell a distinct chlorine bleach odor. Do not forget the hot water, tub and shower faucets.

- Allow the system to stand for four hours.
- Drain the system and flush with fresh water. The water tank and low point drains are located in the outside water control compartment. Flush with fresh water repeatedly, until the water system no longer smells or tastes like chlorine bleach.
- Install new water filter.

## TANK CAPACITIES - CHART

| 2004 Vacationer Specifications | 33PBD | 34SBD | 34PBD | 34PDT | 36PED | 36WDD | 36DBD | 37PCD | 37PCT |
|---|---|---|---|---|---|---|---|---|---|
| **Tank Capacities** | | | | | | | | | |
| Water Heater | 10 gal. | 10 gal. | 10 gal. | 10 gal. | 10 gal. | 10 gal. | 10 gal. | 10 gal. | 10 gal. |
| Grey Tank | 42 gal. | 40 gal. | 42 gal. | 42 gal. | 54 gal. | 54 gal. | 42 / 39gal. | 45 gal | 45 gal |
| Black Tank | 42 gal. | 42 gal. | 42 gal. | 42 gal. | 45 gal. | 45 gal. | 42 / 39gal. | 54 gal | 54 gal |
| Fresh Tank | 60 gal. | 60 gal. | 60 gal. | 60 gal. | 60 gal. | 60 gal. | 60 gal. | 60 gal | 60 gal |
| LP Tank * | 24 gal. | 24 gal. | 24 gal. | 24 gal. | 24 gal. | 24 gal. | 24 gal. | 24 gal. | 24 gal. |

**Actual filled LP capacity is 80% of listing due to safety shut off required on tank.*

**NOTE: This chart reflects product specification available at the time of printing. Therefore any floor plans thereafter may not be reflected in the chart. All other information contained throughout the manual will still apply.**

**NOTE: All tank capacities are estimated based upon calculations provided by the tank manufacturers and represent approximate capacities. The actual "usable capacity" may be greater or less then the estimated capacities based upon fabrication and installation of the tanks.**

## WASTE WATER SYSTEMS

### *Proper Waste Disposal*

Most State Parks have strict regulations about discharging wastes except into authorized disposal systems. Dumping raw sewage from toilet(s) holding tanks, except at authorized dumping stations, is universally prohibited.

Most National, State and private parks have either a central dump facility or campsite hook-up for sewage. Many of the modern rest areas along the interstate now have dump stations available. You will find a list of dumping stations from coast to coast in Woodall's Campground Directory, Trailer Life's RV Campgrounds and Services Directory, Rand McNally's Campground and Trailer Park Guide, Good Sam Park Director (Good Sam Club), and other similar publications. Some major oil companies offer dump facilities at selected stations. With a little planning you will find few inconveniences in proper and legal disposal of holding tank waste.

## What Not to Put into the Holding Tanks

- Do not use strong or full strength detergents to deodorize and disinfect. Use odor control chemicals made especially for holding tanks.
- Do not put automotive antifreeze, ammonia, alcohol or acetone in holding tank. Some chemicals will dissolve plastic.
- Do not put large table scraps in the tanks. They could stick in or damage the valve seals.
- Do not flush facial tissues, sanitary napkins or other non-dissolving items into the system. Chemically treated for strength, the tissue will not dissolve like toilet paper. Special holding tank tissue is available at most RV supply stores. White toilet paper dissolves faster than colored paper.

**CAUTION: Do not use any products that contain petroleum distillate or ammonia in place of RV odor controlling chemicals. Petroleum distillate or ammonia will damage the ABS plastic holding tanks and seals.**

**NOTE: Never dispose of sanitary supplies or other non-dissolving items into the system. Facial tissue, wet strength tissue, paper towels or an excessive amount of toilet tissue can create clogging in the holding tank system.**

## Waste Drain & Sewage Tanks

The waste drain system provides adequate and safe storage and/or discharge of waste materials. The drain system uses ABS plastic piping and fittings connected to sinks, shower, toilet and holding tanks draining to an outside termination. The motorhome should be reasonably level for optimum operation of the systems. The wastewater holding system consists of a wastewater holding tank (grey tank). The grey water tank stores the sink, shower and clothes washer drain water. A sewage holding tank (black tank) stores waste from the toilet only.

Drain valves and a tank flush system dispose waste through a common termination. Each holding tank has a separate drain valve dumping the waste water (grey water) and sewage (black water) through a common single discharge outlet. The tank drain valves are located in the service center on the roadside of the motorhome. Use the water monitor panel to observe tank levels. When ready to drain the tanks, drain the sewage tank first. Next, flush the black tank with the flush system. Drain the grey water tank. Using this sequence helps flush solids from the sewer hose. When traveling, it is recommend both holding tanks be empty or less than half full.

## Waste Drain Hose

A flexible three inch sewer hose attaches between the termination drain and the shore facility. Sewer hoses usually come in 10 or 20 foot lengths. The shore fitting for the sewer hose may be a three or four inch pipe, which could be male or female thread. Another possibility may be a four inch pipe, with no threads, covered by a metal plate. There are many configurations. Different style adapters are available to fit most configurations. Hose ladders may also be purchased to support the hose.

It is important that the hose remains secure. Always tighten clamps and restraining devices before use. Lay the hose inline between the termination outlet and the shore fitting. Restrain the hose to prevent movement during use. Wear protective and/or disposable gloves when handling the sewer hose.

**To Attach the Hose:**

1. Remove termination cap. Align coupler tangs with termination tabs. Twist coupler clockwise 90º locking coupler to termination outlet.
2. Attach the other end of the hose to the drain service. Restrain hose to prevent movement during use.
3. Open the liquid waste drain water valve.

**NOTE: Close the liquid waste drain water valve 24 hours prior to departing to allow the tank to fill with liquid to help in the dumping process.**

The solid waste drain water valve remains closed until the tank is full or until time of departure. This will help prevent accumulation of solids. Use the outside faucet or shower attachment for washing or rinsing.

**NOTE: Lubricate the O-ring on the sewer hose adapter periodically with silicone spray. Use care when connecting the sewer hose adapter to the termination outlet in cold weather**

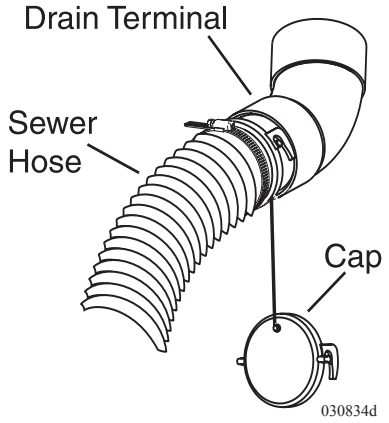


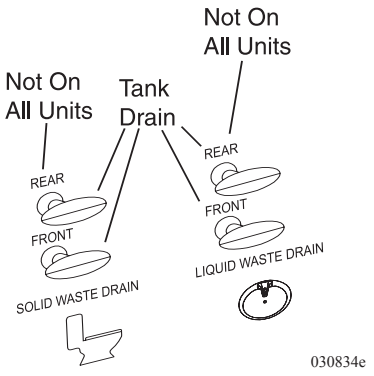


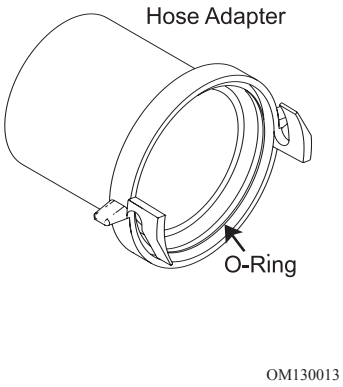

## What to Put into the Holding Tanks - Black Water Tank

Before using the toilet, treat the sewage holding tank with water mixed with an odor-controlling chemical. These chemicals are readily available at most RV supply stores. Pour the chemicals into the holding tank through the toilet. Add approximately three gallons of water to the holding tank first. Next, mix the chemicals, in accordance with the manufacturer instructions, with approximately one gallon of water. Pour mixture through toilet to the holding tank. Be careful not to spill the chemical on your hands, clothing, toilet bowl or carpet as it can cause a permanent stain. Extremely hot weather areas may require adjusted amounts of chemical to help with odor control. Repeat the chemical pre-charge to the holding tank each time the tank is cycled.

**CAUTION: Do not use any products that contain petroleum distillate or ammonia in place of RV odor controlling chemical. Petroleum distillate or ammonia will damage the ABS plastic holding tanks and seals.**

## What to Put into the Holding Tanks - Grey Water Tank

The grey water waste tank stores the sink, shower and clothes washer drain water. No chemical is required in this holding tank; however, a waste holding tank can produce odors. A reduced mixture of chemicals can help with odor control.

Ensure that there is enough liquid in the holding tanks prior to dumping the waste holding tanks. This provides a smooth flow through the valve, drain pipe and drain hose. When cycling the tank with sufficient liquid, a swirling action should remove accumulated solid wastes along with the waste liquid. Empty the sewage tank weekly to prevent stagnation and overfilling.

## Black Tank Flush

The motorhome comes equipped with a power flush system to aid in cleaning the holding tank. The power flush nozzle, located in the black tank, helps reduce solid build-up. Use the tank flush each drain cycle. Failure to thoroughly rinse the tank each drain cycle may result in solids accumulating and a clogged spray nozzle.

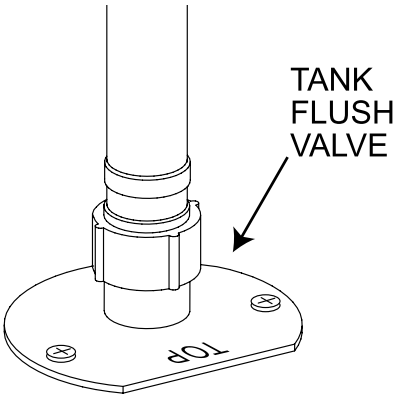


OM040470

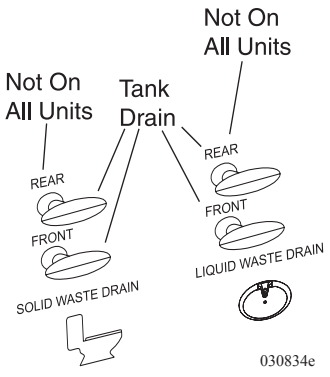


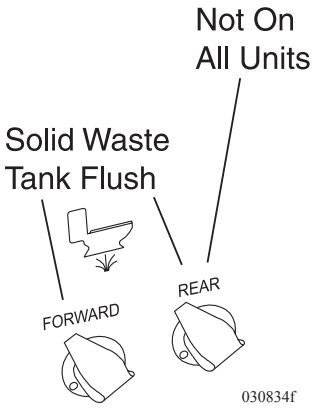


**Dumping the Tanks:**

1. When preparing to dump the solid waste tank, first close the liquid waste water valve.
2. Fill the liquid waste tank to at least 50% by running water in the shower or sinks.
3. Use the monitor panel to observe tank fluid levels. When the liquid waste tank is 50% full stop filling the tank.
4. Open the solid waste water valve. Allow the solid waste tank to drain.
5. Use the tank flush system.
6. Connect a non-potable water hose, with pressure regulator, to the flush system fitting located in the service center.
7. Turn on the faucet allowing water to rinse the solid waste tank at least three minutes. Never operate the system unattended. Ensure the water flows freely though the drain hose.
8. When completed turn off the faucet and close the solid waste water valve.
9. Open the liquid waste water valve. The water in the liquid waste tank flushes any remaining solids from the hose. With the liquid waste water valve open, run two gallons of water down any drain to flush the liquid waste tank. The liquid waste valve remains open until the next drain cycle or departure.

**WARNING: Never operate the flush system unattended. Flooding may occur. Use the tank flush system each time the holding tanks are cycled. Failure to routinely use the flush system will result in a clogged spray nozzle. Turn off the water supply when finished flushing the tank.**

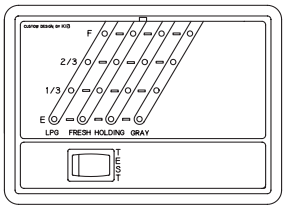


Service Center Tank Monitor (Optional)

OM040505

10. If preparing for travel, close all valves. Undo any restraining devices from the hose. Disconnect the hose from the termination outlet by rotating the fitting counterclockwise 90º.
11. Raise hose and drain using hand over hand method working hose towards shore fitting. Rinse the hose with outside facility and repeat the hose drain process.
12. Remove the hose from shore fitting. Install hose in carrier and lock door. Secure the termination cap (required by law in some states).
13. If desired, add chemicals to the tanks to control odor. Follow the chemical manufacturer's directions.

**NOTE: Dump the solid waste tank before driving.**

## TOILET
### *Operation*

The toilet operates from either the fresh water tank or city water supply. The water pump must be turned on or the city water connected. The toilet flushes directly into a sewage holding tank (black water).

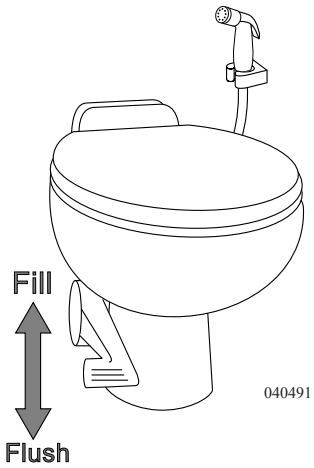


**NOTE: To prevent accumulation of solids below toilet, add several gallons of water to the holding tank before use.**

**CAUTION: Most chemical mixtures for holding tank odor control are poisonous. Follow the product manufacturer's directions and warnings when using any holding tank additive.**

- Using foot, lift up the flush lever to add water to the bowl. Generally, more water is required only when flushing solids.
- To flush the toilet, push the lever all the way down until the sewage leaves the toilet.

Water flow pressures vary at different locations; therefore, holding the flush lever down for several seconds may be required. Release the flush lever by allowing it to snap back, which permits positive sealing around the flush ball. A small amount of water should remain in bowl.

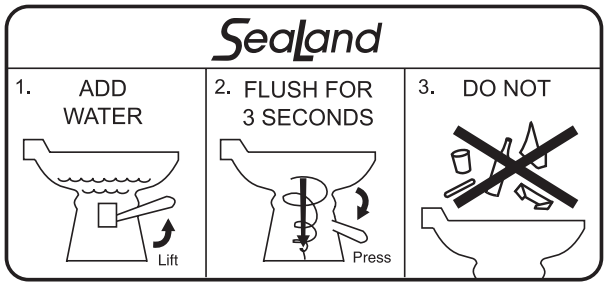


040416

**NOTE: Holding flush lever down longer than necessary results in excessive water usage.**

- To operate the remote mounted hose sprayer, hold the flush lever up or push the flush lever down. Press the handle on the sprayer to wash trim and bowl.

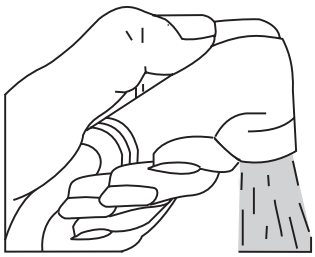

OM040397

**NOTE: Never dispose of sanitary supplies or other non-dissolving items into the toilet. Facial tissue, wet strengths issue, paper towels or an excessive amount of toilet tissue can clog the tank or termination valve.**

### *Cleaning*

The toilet should be cleaned regularly for maximum sanitation and operational efficiency. Clean the toilet bowl with a mild bathroom cleaner. Do not use chlorine or caustic chemicals, such as drain opening types, as they will damage the seals.

Clean out the system by flushing several gallons of fresh water through with one cup of dry laundry detergent. Add odor control deodorant, in the amount specified for your holding tank capacity, after cleaning and every few days during use.

To find leaks, check behind or under toilet. Take four or five sheets of toilet tissue and wipe all the seams and water line connections. Start at the top of the unit and work downward. When the tissue comes in contact with leaking water it will immediately change texture.

**NOTE: If the motorhome is in storage for six months it is a good idea to spray silicone on the toilet valve and work it back and forth. Perform this maintenance monthly (silicone will evaporate in about 30 days).**

**Checking for leaks:**

- Back of toilet: check water supply line connection.
- Between closet flange and toilet: Check screws for tightness. If leak continues, remove toilet and check flange height. Adjust, if necessary to 7/16" above floor. Replace flange seal if damaged.
- Poor flush: A good flush should be obtained within 2 to 3 seconds. If problem persists remove the water supply line and check flow rate. The flow rate should be at least ten quarts (9.5 liters) per minute.
- Bowl will not hold water: Check for foreign material in valve blade groove in the flush drain.

## Drain Traps & Auto Vents

Sinks, shower and clothes washer drains incorporate a water trap or "P-trap" and auto vents to prevent waste water holding tank odor from entering the motorhome. These P-traps are usually within 54" of a vent tee. These traps must have water in them to block odors. During storage water can evaporate and allow odor into motorhome. If odor is detected run water into sinks, shower and clothes washer to fill drain traps. The auto vent by design is to assist in the flow of water in the drain lines. They enable a smooth flow of water in the drain without creating a vacuum.

If the auto vent is stuck in the open position, grey odors may enter the motorhome. Auto vents double as "clean outs" in case the line has to be “snaked” out.

**NOTE: Most chemical mixtures for holding tank odor control are poisonous. Follow the product manufacturer's directions and warnings when using any holding tank additive.**

**NOTE: During cold weather antifreeze must be added to the drain traps.**

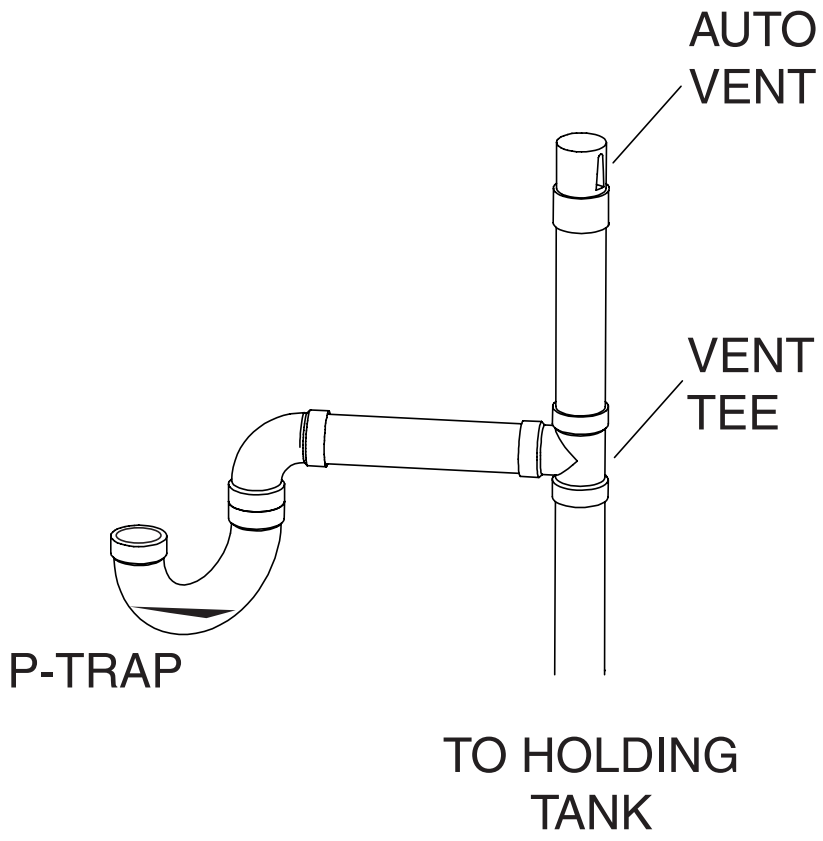


OM070152

## COLD WEATHER CONDITIONS

The motorhome is not designed for extended use in below freezing (32°F/0°C) weather. There are precautionary measures that can be taken for extended cold weather use.

Interior water lines, fixtures, and drains above the floor are normally protected from moderate freezing temperatures as long as the furnace is operating. Cold temperatures can adversely affect water systems below the floor level because the LP-Gas furnace heat does not provide heat to these components. A supplement 12 Volt bay heater and thermal snap disc are located in the water service bay. The System Heat switch on the monitor panel operates the bay heater and should be turned on when ambient temperature approaches 44ºF (+/- 6ºF) and freezing temperatures may occur.

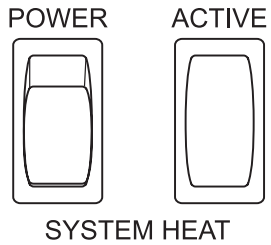

OM040437

**System Heat Operation:**

1. Turn the Systems Heat switch ON to supply power to the snap disc thermostat.
2. When the bay temperature reaches 40ºF (+/- 6ºF), the snap disc thermostat will close. The bay heater and the systems heat Active light will turn on. The heater will continue to operate until bay temperature reaches 55ºF (+/- 6ºF). The bay heater and Active indicator light will turn OFF.

**NOTE: The bay heater consumes about 20 Amps when operating. House battery power can be quickly consumed. It is recommended to hook to shore power when using Systems Heat.**

**Storing the Motorhome in Cold Weather Conditions:**

If the motorhome is stored where freezing temperatures may occur, drain the domestic fresh water loop completely of water. When draining the domestic fresh water system begin with draining the fresh water tank by opening the point drain lever for the fresh tank and allowing the water to drain.

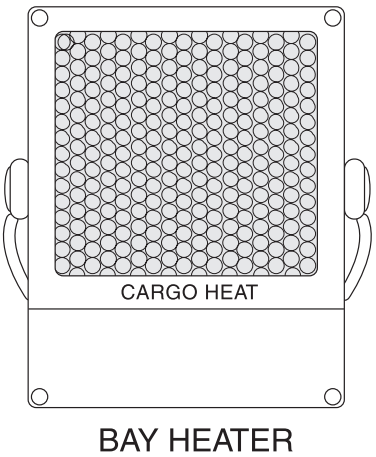

OM030981

**NOTE: Icemaker, water filters, water purifies and water heaters all use domestic water and should be drained and stored in accordance with the manufacturer's recommendation for winterization.**

## STORAGE - COLD WEATHER

If the motorhome is stored where freezing temperatures may occur, drain the domestic fresh water loop completely of water. The method chosen to winterize the motorhome and water lines is up to the motorhome owner. The lines can be air blown to remove standing water or the lines can be filled with an approved FDA RV antifreeze. Either way, all interior and exterior faucets need to be opened and closed, one at a time, to be checked. All low point drains should be opened and the holding tanks emptied.

**NOTE: Ice makers (if applicable), water filters, washer/dryer (if applicable) and water heaters all use domestic water and should be drained and stored in accordance with the manufacturer's recommendation for winterization.**

## WINTERIZING
### *Using Air Pressure*

To use air pressure to winterize the motorhome you will need access to an air compressor and an adapter to connect the air line to the water system. Adapters can be found at any RV supply store. When hooked to the water lines the pressure should not exceed 40 psi. Higher pressure can damage the lines.

1. Remove water faucet filter cartridge and replace filter with diverter hose (see FAUCET WATER FILTER). Diverter hose comes with motorhome and will be stored inside. With diverter hose installed it creates a bypass in the water lines.
2. Drain the fresh water tank and lines by opening the tank drain valve and the low point drain valves located in the outside water control service compartment of the motorhome.
3. Let all water drain. Turn the pump on and allow it to run so that all the water is cleared out of the pump and water tank. Turn the pump off. Close the water tank shut off valve.
4. Remove water heater drain plug and open pressure release valve located in the outside water heater access compartment.
5. After the water is drained, hook an air hose to the city water connection located on the water control panel in the outside service compartment and turn the air on. Do not exceed 40 psi in the water lines and faucets.
6. When no further water can be seen coming out of the drains, move water heater bypass valve to BYPASS setting located next to water heater. Replace the water heater drain plug and close the pressure release valve. Open all faucets (including the outside spigot) one at a time to clear water from the faucet supply lines. Do not forget to drain the shower.
7. If applicable, winterize the washer/dryer (See Winterizing the Washer/Dyer).

8. Flush toilet until the water has stopped running.
9. If applicable remove ice maker valve outlet line located in the outside refrigerator access compartment. Cycle ice maker several times to clear water from inlet line and valve. Reconnect ice maker valve outer line.
10. Shut off air, unhook the air hose and close the city water connection.
11. You will need 1 gallon of RV antifreeze to protect various water drain lines in the motorhome. Pour 1 pint into both the kitchen and bath shower drains. Pour 2 pints into the bath sink drain, with some of the antifreeze going into grey tank to protect the drain valve. Open the toilet bowl valve, pour another 3½ pints into the toilet, letting the antifreeze run into the black tank to protect the valve located there. Pour the last pint of antifreeze into the toilet after you have closed the toilet bowl valve. Use a soft cloth to wipe out the sinks and shower (after the antifreeze is poured in) to protect the surfaces from stains.
12. Leave the low-point drains open until the motorhome is used again.

**WARNING: When draining the low water drain lines and the water heater be sure the water is not hot. Hot water from the lines can burn or injure skin.**

## Using Non Toxic Antifreeze

If you choose to fill the water lines with antifreeze, you will need 5 gallons of FDA RV winterizing antifreeze.

1. Remove water faucet filter cartridge and replace filter with diverter hose (see FAUCET WATER FILTER). Diverter hose comes with motorhome and will be stored inside. Diverter hose installed creates a bypass in the water lines.
2. Drain the fresh water tank and lines by opening the tank drain valve and the low point drain valves located in the outside water control service compartment of the motorhome. Position the water tank fresh water valve in the “Fresh Water Tank” setting.
3. Let all the water drain. Turn the pump on and allow it to run so that all the water is cleared out of the pump and water tank. Turn the pump off.
4. Remove water heater drain plug and open pressure release valve located in the outside water heater access compartment.
5. After the water is drained, move water heater bypass valve to BYPASS setting located next to water heater. Replace the water heater drain plug and close the pressure release valve.
6. Close the fresh water tank drain valve and the low point drain valves.
7. Close the water tank shut off valve.
8. Install a hose to the city water hook up and drop the other end of hose into the antifreeze container.
9. Turn ON the system water pump and operate each faucet individually until a small amount of antifreeze is present.
10. Close the faucets.
11. If applicable, winterize the washer/dryer (see WINTERIZE THE WASHER/DRYER).
12. Open the shower faucets and flush toilet to allow a small amount of antifreeze to run into the holding tanks.
13. Use a soft cloth to wipe out the sinks and shower to protect surface from antifreeze stains.
14. Exterior faucet should be opened and closed using the same procedures as the interior faucets.
15. If the motorhome is equipped with an ice maker, remove the valve outlet line located in the outside refrigerator access compartment. Cycle ice maker several times until antifreeze is present.
16. Turn water pump off.
17. Disconnect the power supply line affecting water pump operation.

**WARNING: You should use only non-toxic RV antifreeze that is specifically made for potable water systems. Automotive antifreeze, if ingested, can cause blindness, deafness or death. It is recommended that this procedure be done by a qualified RV service technician familiar with motorhomes, such as the authorized selling dealer.**

**De-winterization:**

For de-winterization, open the water tank shut off valve if applicable. Close water tank and low point drains and fill the fresh water tank with water. Reconnect the power supply line for the water pump. Turn water pump on and operate all faucets, one at a time, until clear water is present. If applicable, cycle icemaker several times until fresh water is present and reconnect valve outlet line. Install new water faucet filter. Fill water heater with water.

## ~ NOTES ~

## ~ NOTES ~

# *LaPalma - LP-Gas System*

**LP-GAS SYSTEM.....271**
**LP-GAS DETECTOR.....272**
Testing .....273
Alarm.....274
Maintenance.....274
**LP GAS TANK - MEASUREMENT.....275**
Tank Capacities - Chart .....275
**LP-GAS EMERGENCY PROCEDURES - CHECKLIST.....276**
**LP-GAS TANK.....276**
Operation .....276
LP-Gas Tank Filling .....278
**LP-GAS FUNDAMENTALS .....278**
**LP-GAS REGULATOR .....280**
**LP-GAS HOSE INSPECTION .....282**
**LP-GAS CONSUMPTION.....283**
**LP-GAS DISTRIBUTION LINES .....284**
**LP-GAS SAFETY TIPS .....285**

## LP-GAS SYSTEM

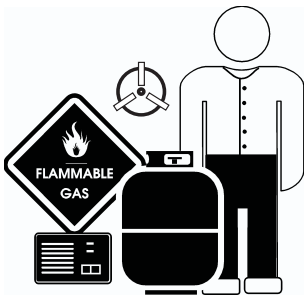


LP2

The LP-Gas System section contains information and knowledge for the operation and care of the various Liquefied Petroleum (LP-Gas) system equipment found in the motorhome. The motorhome is equipped with several appliances and various equipment which are capable to operate on LP-Gas. Some items discussed may not be applicable to all motorhomes. More detailed information with **CAUTION** or **WARNING** instructions for the various equipment, other than what is found in this section, can be found in the manufacturer's manual in the owner's information box.

All components for the motorhome LP-Gas systems are approved for use in recreational vehicles by a nationally recognized testing laboratory. When properly handled, LP-Gas is a clean-burning dependable fuel for heat producing components. The LP-Gas tank mounted in the motorhome contains liquid petroleum gas that is under high pressure. As the fuel is used, liquid gas vaporizes and passes through the tank valve to a regulator that automatically reduces pressure. Low-pressure gas is then distributed to components through a pipe manifold system.

Component lighting problems are commonly caused by an improperly adjusted gas regulator. Do not attempt to reset the regulator. Adjustments need to be made by a dealer or an authorized service person.

In higher elevations or extreme cold weather (10° F/-21° C or lower) a shortage of LP-Gas may be experienced. Usage can be modified by running only one component at a time. For example, turn off the furnace while using the range. If LP-Gas is going to be used in higher elevations or cold climates for a long period of time, have an authorized service person adjust the LP-Gas regulator for these conditions.

Have the LP-Gas system checked by an authorized dealer at least once a year, and thereafter before every extended trip. Although the manufacturer and the dealer test the system carefully for leakage, travel vibrations can loosen fittings.

Leaks can be easily found by applying a leak detector solution on all connections. Leaks can usually be repaired by tightening the fittings. If not, shut off the main gas valve at the tank. Immediately see an authorized dealer for repairs. Hand tighten the tank valves only. Do not use a wrench or pliers as over tightening may damage valve seats and cause leaks. If a leak is suspected (which can be easily identified by the odor of rotten eggs or sulfur) never light a match, have an open flame or use any spark producing equipment or appliance.

**WARNING: LP-Gas is highly volatile and extremely explosive. DO NOT use matches or a flame to test for leaks. Use only approved LP-Gas leak testing solution for leak detection. Unapproved solutions can damage copper tubing and brass fittings. Never attempt to adjust LP-Gas regulators. Only qualified personnel should perform any maintenance or repair to the LP-Gas system.**

## LP-GAS DETECTOR

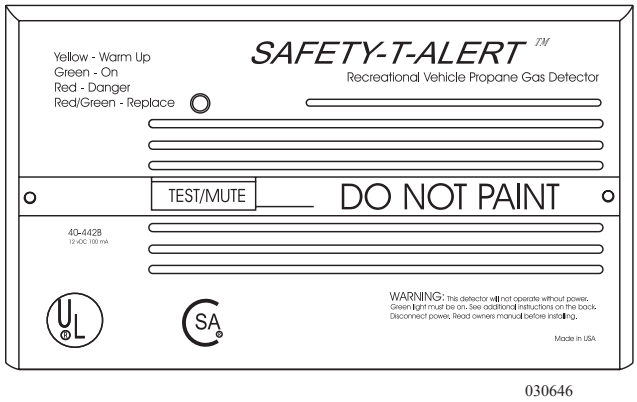


The LP-Gas detector is required safety equipment in RVs. American National Standards Institute (ANSI) A119.2 - Fire & Life Safety 3-4.8 LP Gas Detectors states "An LP Gas detector must be installed in any RV that contains an LP Gas appliance and an electrical system. The LP Gas detector must be listed as suitable for use in recreational vehicles under the requirement of UL 1484 Residential Gas Detectors, and installed according to the terms of its listing."

The detector senses both LP-Gas and methane gas. Liquefied Petroleum (LP) Gas is heavier than air; methane gas is lighter than air. LP-Gas will settle to the lowest point, generally the floor of the motorhome. Methane gas will rise. The gas detector is also sensitive to other fumes such as hair spray, of which most contain butane as the propellant. Butane, like propane, is heavier than air and will settle to the floor level where it will be detected. Sulfated batteries (rotten egg odor) will also sound the alarm. When this occurs, reset the detector to stop the alert sound.

**About the LP-Gas Detector:**

It is important to be aware of the difference between a gas leak versus gas escaping from an unlit, open burner. Pure propane vapors from a leaking pipe or gas fitting are heavier than air and will build up their heaviest concentration at the leak and float down until they mix with air. Gas from open burners is intentionally mixed with air to induce burning and will dissipate into the air. When mixed with air, the gas becomes only marginally heavier than air and will expand outward. If a gas burner is left on, the area around the burner, range, and adjoining counter space will be combustible and can cause injury and damage if ignited. This condition will exist for an extended time period and eventually the gas will reach the detector's location and be detected.

**NOTE: The LP detector only indicates the presence of propane gas at its sensor. Combustible levels of propane gas may be present in other areas. This detector is intended for the detection of propane gas ONLY.**

The LP-Gas detector is not tested to detect other types of gas. However, other volatile gases (nuisance gases), most of them flammable in various concentrations, may cause the detector to alarm. Some products that may cause the detector to alarm are alcohol, liquor, kerosene, gasoline, deodorants, colognes, propellants used in spray cans and cleaning solvents. In some cases vapors from glues and adhesives used in the manufacturing of the motorhome may also cause the detector to alarm for several months after the date of manufacture. If it is determined that the detector has false alarmed because of the above mentioned nuisance gases, reset the detector and air out the motorhome with fresh outside air.

Take precautions to be sure one of these nuisances has not masked an actual gas alarm condition. The detector draws less current than one instrument panel lamp. The detector will operate to detect gas until the battery is drained down to 7.0 Volts. The detector must be supplied with a voltage higher than 7.0 Volts, for it to operate properly. If the power source is disconnected, or if the power is otherwise interrupted, the detector will not operate.

The LP-Gas leak detector has a self-check circuit which runs at all times while the detector is powered. In the event that the circuitry fails, a failure alarm will sound and the operating indicator will cease to light.

**LP-Gas Detector Operation:**

Upon first application of power the LED will flash yellow for three minutes while the detector is stabilizing. At the end of the start cycle the LED will turn Green, indicating full operation. If the detector senses unsafe levels of gas it will immediately sound an alarm. The gas detector operates on 12 Volt DC, with a current draw less than 1/10th of one amp.

**CAUTION: The detector will not alarm during the three minute warm up cycle.**

## *Testing*

Press the **TEST** switch any time during the warm up cycle or while in normal operation. The LED should flash red and the alarm should sound. Release the switch. This is the only way the detector should be tested. The test feature checks full operation of the detector.

**WARNING: Test the operation of this detector after the motorhome has been in storage, before each trip and at least once per week during use.**

## Alarm

The **red** LED will flash and the alarm will sound whenever a dangerous level of propane or methane gas is detected. The detector will continue to alarm until the gas clears or the **Test/Mute** switch is pressed.

**Procedures to Take During an Alarm:**

1. Turn off all gas appliances, (stove, heaters, furnace), extinguish all flames and smoking material. Evacuate, leave doors and windows open.
2. Turn off the primary valve on the LP tank.
3. Determine and repair the source of the leak. Contact a qualified service professional if additional repairs are necessary or if the source of the leak cannot be determined.

**CAUTION: Do Not re-enter until the problem is corrected.**

**WARNING: Do not operate the remote LP disconnect switch during an alarm. This may cause a spark that can ignite the fuel. Turn off the primary LP valve on the LP tank.**

**Potential Sources of LP Gas Leaks When Operating the Motorhome:**

- Cooktop Burners
- Oven
- Furnace
- Refrigerator
- Water Heater
- Defective Regulator
- Defective LP-Gas Connection
- Portable Propane Powered Equipment

**Alarm Mute:**

Press the **Test-Mute** button when the detector is in alarm.

1. The red LED will continue flash and the alarm will beep every 30 seconds until the gas level has dropped to a safe level.
2. The LED will flash green until the end of the Mute cycle.
3. If dangerous gas levels return before the end of the Mute cycle, the alarm will beep four times and return to phase 1.
4. After two minutes the detector will return to normal operation (solid green) or resound the alarm if dangerous levels of gas remain in the area.

**Fault Alarm:**

Should the microprocessor sense a fault in the gas detector, a fault alarm will sound twice every 15 seconds. The LED will alternately flash **red to green** and the **MUTE** switch will not respond to any command. The gas detector must be repaired or replaced.

## Maintenance

1. Vacuum the dust off the detector cover weekly (more frequently in dusty locations) using the soft brush attachment of the vacuum.
2. Do not spray cleaning agents or waxes directly onto the front panel. This action may damage the sensor, cause an alarm or cause a detector malfunction.

## LP-GAS TANK - MEASUREMENT

Two methods can be used to monitor the amount of fuel in the LP-Gas tank. A small gauge is located on the LP-Gas tank. This non-adjustable gauge provides a quick view of the tank capacity. The monitor panel in the hallway also measures the LP Gas level of the tank. To check the LP tank level, push test button on the display panel. Lights on panel will turn on in sequence indicating level of tank. The lights and scale indications are as follows:

- Green lamps indicate good or normal ranges.
- Amber lamps indicate fair or partial ranges.
- Red lamps indicate full or empty ranges (depending on the scale), which are in the critical range.

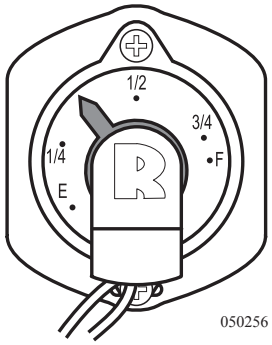

*LP Tank Gauge*

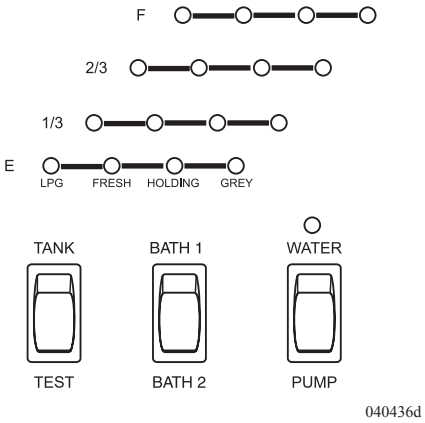


### *Tank Capacities - Chart*

| 2004 Vacationer Specifications | 33PBD | 34SBD | 34PBD | 34PDT | 36PED | 36WDD | 36DBD | 37PCD | 37PCT |
|---|---|---|---|---|---|---|---|---|---|
| **Tank Capacities** | | | | | | | | | |
| Water Heater (Atwood) | 10 gal. | 10 gal. | 10 gal. | 10 gal. | 10 gal. | 10 gal. | 10 gal. | 10 gal. | 10 gal. |
| Grey Tank (Amerikart) | 42 gal. | 40 gal. | 42 gal. | 42 gal. | 54 gal. | 54 gal. | 42 / 39gal. | 45 gal. | 45 gal. |
| Black Tank (Amerikart) | 42 gal. | 42 gal. | 42 gal. | 42 gal. | 45 gal. | 45 gal. | 42 / 39gal. | 54 gal. | 54 gal. |
| Fresh Tank (Amerikart) | 60 gal. | 60 gal. | 60 gal. | 60 gal. | 60 gal. | 60 gal. | 60 gal. | 60 gal. | 60 gal. |
| LP Tank * (Manchester) | 24 gal. | 24 gal. | 24 gal. | 24 gal. | 24 gal. | 24 gal. | 24 gal. | 24 gal. | 24 gal. |

**Actual filled LP capacity is 80% of listing due to safety shut off required on tank.*

**NOTE: This chart reflects product specification available at the time of printing. Therefore any floor plans thereafter may not be reflected in the chart. All other information contained throughout the manual will still apply.**

**NOTE: All tank capacities are estimated based upon calculations provided by the tank manufacturers and represent approximate capacities. The actual "usable capacity" may be greater or less then the estimated capacities based upon fabrication and installation of the tanks.**

## LP-GAS EMERGENCY PROCEDURES - CHECKLIST

If you smell gas (a rotten egg or sulfur smell) at any time, perform the following steps immediately:

- Shut off gas appliances.
- Manually turn off the primary shut-off valve at the LP-Gas tank.
- Do not attempt to operate any electric switch as this can produce a spark and ignite the gas.
- Open windows and doors.
- Evacuate the motorhome. Stay clear of the surrounding area.
- Keep open flames, spark producing devices and smoking material out of the area.
- Contact a qualified service technician to find the source and repair the gas leak.

**WARNING: A fire or explosion from ignited gas or gas fumes can seriously injure person(s) or cause death.**

## LP-GAS TANK *- Operation*

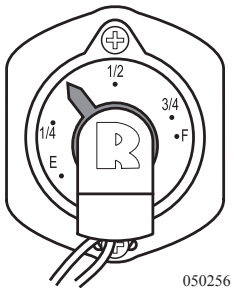


LP-Gas exists in both liquid and vapor within the LP-Gas tank. A "Full" tank is approximately 80% liquid. The pressure inside the tank varies with the temperature of the liquid. All tanks are required to be equipped with a pressure relief device. The purpose of the relief valve is to release gas or liquid caused by being overpressurized. The gauge at the tank, when full, will only read 3/4 full. The monitor panel is adjusted to indicate **"FULL"** at this point.

When storing portable LP-Gas tanks that are not connected to an LP-Gas system, install an approved plug in the tank outlet holes to prevent leaks. Do not transport or store LP-Gas tanks, gasoline or other flammable liquids inside the motorhome.

**WARNING: Do not store or transport empty LP-Gas tanks, portable tanks, gasoline or other flammable liquids inside the motorhome. Keep open flame and spark producing materials away from the LP-Gas area. Shut off all appliances and LP-Gas tank valve (located on side of LP-Gas tank underneath the motorhome) when the motorhome is in storage. If this warning is ignored a fire or explosion could result.**

**CAUTION: Pressure inside LP-Gas tanks can reach over 200 psi when exposed to direct sunlight. A high pressure safety relief valve will purge excess high pressure if necessary. LP-Gas will stop vaporizing as the LP-Gas tank temperature approaches -40º F. Appliances that consume large amounts of LP-Gas, such as the water heater or furnace, will need to be operated in sequence in extremely cold environments.**

**NOTE: The information is not a complete guide for the use of LP-Gas tanks or appliances. In cold climates keep fuel levels above 50% in order to keep vaporization of LP-Gas at the highest level.**

**Tank Operation:**

- Manually open the primary shut-off valve located on the LP-Gas tank.
- Turn off the manual primary shut-off valve on the LP-Gas tank when the motorhome is in between trips.
- Hand tighten the manual primary shut-off valve. Do not use a wrench or pliers to close the valve.
- The manual primary shut-off valve is designed to be closed by hand, over tightening may permanently damage the valve seat.

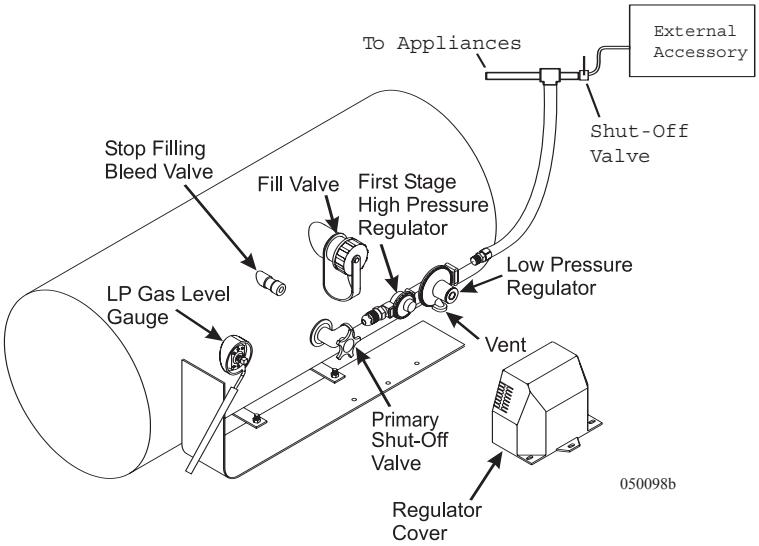


**Exterior Gas Line Hook-Up Prep:**

LP-Gas hook-up is for LP Accesories and is to be used on external components only. A LP-Gas quick disconnect fitting and flexible hose should be used to connect accessories to the line hook-up. Fitting should be installed by a qualified agency as defined in the national fuel gas code. (NFPA 54).

Every time accessory is used check for gas leaks on all connections, use a liquid dish detergent to 10 parts water. Agitate solution until bubbles form, then apply to all fittings and accessory control valve. If leak is detected, turn gas off at main LP tank and contact a qualified service center for parts.

QUICK DISCONNECT FITTING

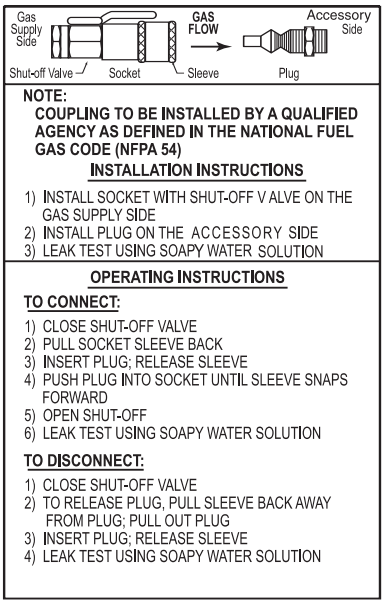

## LP-Gas Tank Filling

*Woodall's Campground and Trailer Guide* and other publications list refueling stations. Many travel parks sell LP-Gas. Shut off the pilot lights, appliances and igniters before filling the LP-Gas tank to prevent a fire or explosion. Have a trained service person fill the LP-Gas tank.

The LP-Gas tank fill is located in the LP-Gas tank access outside compartment. Caution the service technician, if the tank is new and being filled for the first time, to purge any air from the tank before filling. When the tank is filled to the proper level there is space available for the conversion of liquid into gas. If a tank is over-filled it may vent pressure. When this happens you may detect a strong rotten egg odor near the tank and/or hear a hissing noise.

**WARNING: Turn off all pilot lights and appliances while filling the LP-Gas tank to prevent a fire or explosion.**

## LP-GAS FUNDAMENTALS

| Capacity in Pounds | Capacity in Gallons | Capacity in BTU's |
|---|---|---|
| 5 | 1.18 | 107,903 |
| 10 | 2.36 | 215,807 |
| 11 | 2.59 | 237,387 |
| 20 | 4.72 | 431,613 |
| 30 | 7.08 | 647,420 |
| 40 | 9.43 | 863,226 |

The above capacities allow for 20% vapor space on each cylinder.

*Data taken from the National Fire Prevention Association (NFPA). Pamphlet #58-1998*

| CONVERSIONS | |
|---|---|
| | |
| Gallons to Liters | 1 Gallon = 3.785 Liters |
| Fahrenheit to Celsius | F° - 32 / 1.8 = C° |
| 11 inch Water Column | = 6 1/4 Ounces Per Square Inch Pressure |
| 27.7 inch Water Column | = Pound Per Square Inch Pressure |

**Basic Facts About LP-Gas**

- LP-Gas detectors are a federal requirement on all LP-Gas equipped recreation vehicles.
- LP-Gas is a by-product produced by refining oil.
- Odor is added to LP-Gas after the refining process.
- Each liquid gallon of LP-Gas produces 1,502 BTU (British Thermal Unit).
- Temperature effects pressure of LP-Gas. Internal tank pressure can exceed 200 psi.
- Tanks or valves contain pressure relief valves. The relief valve opens at 125% above tank rating.
- LP-Gas stops vaporizing at -44ºF.
- Standard LP-Gas operating pressure is 11" of Water Column or approximately 6¼ ounces per square inch.
- An inch of Water Column is a measurement of applied pressure to one side of a U-tube ½ filled with water at sea level. The amount of pressure required to raise the water level 11", represents 11" of Water Column.

**NOTE: The information is not a complete guide for the use of LP-Gas tanks or appliances. In cold climates keep fuel levels above 50% in order to keep vaporization of LP-Gas at the highest level.**

| LP-GAS STATISTICS | |
|---|---|
| | |
| Pounds Per Gallon | 4.24 |
| Specific Gravity of Gas | 1.5 |
| Specific Gravity of Liquid | 0.504 |
| Cubic Feet Gas Per Gallon of Liquid | 36.38 |
| Cubic Feet Gas Per Pound | 8.66 |
| BTU Per Gallon | 91,502 |
| BTU Per Pound | 21,548 |
| Dew Point in Degrees Fahrenheit | -44º |
| Vapor Pressure at 0ºF | 31 |
| Vapor Pressure at 70ºF | 127 |
| Vapor Pressure at 100ºF | 196 |
| Vapor Pressure at 110ºF | 230 |
| Flash Point in Degrees Fahrenheit | 842º |

## LP-GAS REGULATOR

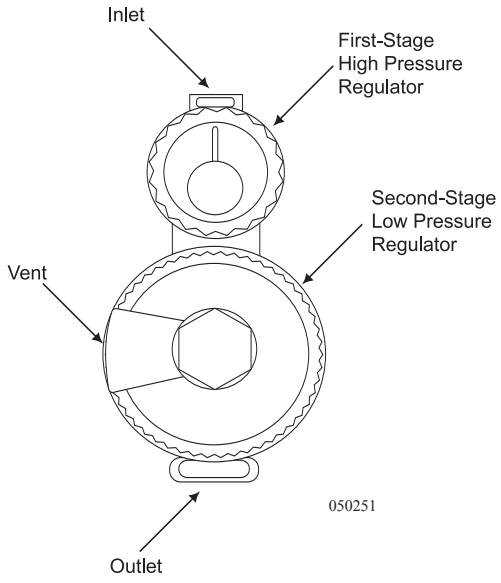


LP-Gas is compressed into liquid form in the tank. Only the vapor is used during combustion by an appliance. As vapor is removed from the tank, the remaining liquid will vaporize to maintain pressure that is removed during consumption. This process will continue until there is no liquid remaining in the tank.

Temperature affects action of the liquid to vaporize. If temperature of the liquid is - 44º F. the liquid remains stable with tank pressure about 0 psi. If liquid temperature is 100º F. the liquid quickly vaporizes with tank pressure about 200 psi. Vapor pressure must remain relatively consistent regardless of temperature so that appliance heat output remains stable. Vapor pressure regulation is performed by the regulator.

The regulator is the heart of the LP-Gas system. The regulator reduces vapor pressure so that it is safe to use. The regulator on the motorhome is a two-stage regulator. The first stage regulator reduces tank pressure down to a range of 10-13 psig (pounds per square inch gauge). The second stage further reduces pressure down to a working pressure of 0.4 psig (11 Inches of Water Column or about 6¼ ounces psi.). The regulator has a vent that allows the internal diaphragm to move with atmospheric pressure change. It is important to keep the vent clean and clear of obstructions or corrosion. If the vent becomes clogged, pressure from LP tank could cause erratic pressure regulation. If there is any corrosion, contact a qualified LP-Gas service technician. The regulator is mounted so that the vent faces downward. If the vent becomes clogged clean it with a toothbrush.

Under normal atmospheric conditions an LP regulator will not freeze, nor will the LP-Gas. Vapor passing through the regulator will expand and cool condensing moisture in the gas. The moisture will freeze which can build up and partially or totally block the vent. The possibilities of freeze up are greatly reduced with the two stage regulator.

**To Prevent Freeze Up:**

1. Ensure the LP tank is totally free of moisture prior to filling.
2. Ensure the tank is not overfilled.
3. Keep the valve closed when the tank is empty.
4. If a freeze up occurs, have an LP-Gas distributor purge the tank.
5. Have the LP-Gas distributor inject methyl alcohol in the tank.

Damage to the regulator can occur when the tank is overfilled. The regulator is designed to work with vapor only. This is why the tank is filled to only 80% of its liquid capacity. The other 20% allows for vaporization of the liquid. The primary vapor valve is located in the vapor section of the tank. In an overfilled tank, liquefied petroleum can fill the regulator. As the liquid vaporizes, it can freeze the diaphragm. High tank pressure on a frozen diaphragm can cause a rupture resulting in erratic pressure regulation. This is why it is important to have the LP-Gas pressure checked for proper pressure and accurate regulation during appliance operation. Erratic pressure regulation dramatically effects furnace output, water heater recovery time and refrigerator operation on LP-Gas.

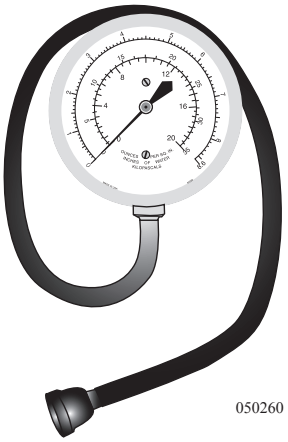

*Manometer Gauge*

**Manometers:**

The manometer is the best way to accurately determine LP-Gas pressure. There are two different styles of manometers, a gauge and a U-tube. Gas pressure is measured in Inches of Water Column. This is the amount of pressure applied to one side of a U-shaped tube half filled with water. The amount of pressure needed to raise the column of water 11” represents 11” of Water Column.

**WARNING: Do not attempt to adjust the regulator, it is preset at the factory. If adjustments need to be made it requires special equipment. Failure to follow these instructions may result in a fire or explosion and cause severe personal injury or death. Do not operate any LP-Gas appliance until the LP-Gas pressure is checked and a leak down test is performed!**

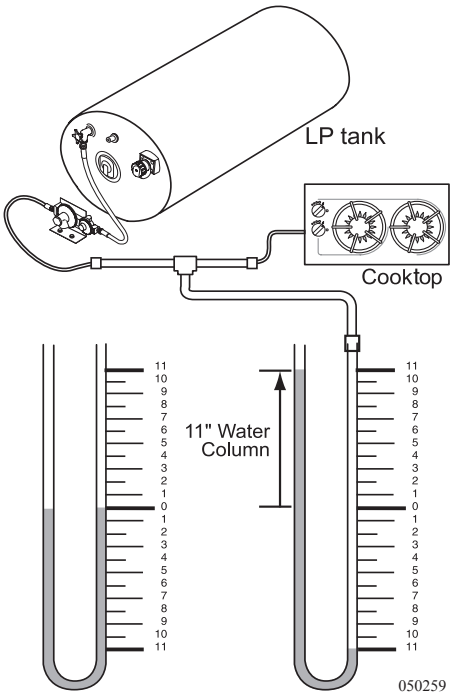

*Example of Operation U-Tube*

## LP-GAS HOSE INSPECTION

It is suggested by the hose manufacturer that the Liquid Propane Gas (LP-Gas) supply hoses used on the motorhome be subject to regular inspections. As a guideline, we suggest that all flexible LP lines connecting the slide-out, appliances, or tanks be inspected in the spring and fall of each year by a qualified RV technician.

According to the manufacturer, the inspections should consist of the following procedures and be performed when the hose is not under pressure:

1. **Inspect** the outside cover of the hose for blistering, abrasion or cuts and end coupling slippage. Cuts in the hose cover, which expose or damage the reinforcement, are cause for replacement. Hose strength is controlled by the plies of the reinforcement and, for this reason; damage in this area cannot be tolerated. Small cuts, nicks, or gouges in the cover that do not go completely through the cover will not be cause for replacement of the hose.

**NOTE: Pricking of the cover in the manufacture of this type of hose is common and necessary for satisfactory hose performance. Consequently, the uniformly pricked cover should not be viewed with alarm.**

2. Damage to the textile reinforcement or wire braid is cause for hose replacement. Wire braid reinforced hose, which has been kinked or flattened, so as to permanently deform the wire braid in the un-pressurized state, shall be removed from service.
3. Blistering or loose outer cover is cause for hose replacement.
4. Examine end couplings for slippage. Slippage is evidenced by the misalignment of the hose and coupling and/or the scored or exposed area where slippage has occurred. Any evidence of slippage is cause for hose replacement.
5. It is important that if a damaged LP-Gas hose is found, the source of the damage be determined and corrected prior to the replacement of the LP-Gas hose.

**NOTE: Only a qualified RV technician should complete replacement of LP-Gas components.**

It is also suggested, that the flexible LP-Gas supply lines on your recreational vehicle be replaced every ten (10) years. The manufacturer of the LP-Gas supply lines recommended this schedule after performing extended testing and have determined that the failure rate may rise after this period of time. The motorhome manufacturer recommends following these guidelines to assure your continued safety and the dependable use of your recreation vehicle.

## LP-GAS CONSUMPTION

Each gallon of LP-Gas produces 91,502 BTU's of heat. One 27 gallon tank produces two million BTU's. Total consumption depends on the rate of usage by each appliance and the operating time. The stove and heating systems typically use the most gas. With sub-freezing temperatures and high winds, consumption by the furnace can be very high. Check the tank level often in cold weather.

**Determine Fuel Consumption:**

To determine approximately how many hours an LP-Gas appliance will operate on one gallon of LP use the following formula:

- LP-Gas appliances are rated in Input BTU (British Thermal Unit). The rating is usually stamped or printed on a tag affixed to the appliance. For example: Input rating of the appliance is 10,000 BTU's.
- One gallon of LP-Gas produces 91,502 BTU's.
- Divide the amount of BTU's of one gallon of LP-Gas (91,502) by the rating on the appliance in this example 10,000. Net continuous operation time for one gallon of LP-Gas for this appliance would be approximately 9.2 hours.

| TYPICAL APPLIANCE BTU RATINGS |
|---|
| **Water Heater** |
| 6 gallon - 8,800 BTU |
| 10 gallon - 10,000 BTU |
| **Funace** |
| 40,000 BTU |
| **Cooktop** |
| 9,000 BTU - Front |
| 6,500 BTU - Rear |
| 7,100 BTU - Oven |
| **Refrigerator** |
| 2-Door - 1,500 BTU |
| 4-Door - 2,200 BTU |

The above formula can be useful when trying to determine the approximate length of time a tank of LP-Gas will last. Generally, LP-Gas appliances do not operate continuously. An example would be the typical cycling of the furnace or water heater.

**Determining how long a tank of LP-Gas will last:**

- Combine the BTU input totals of all appliances and the approximate length of time these appliances operate per day.
- Multiply the number of liquid gallons in the LP tank by 91,502.
- Divide the total of BTU's of the LP tank by the total number of BTU's the appliances consume. This will equal the approximate number of hours of operation before refueling.

**WARNING: LP-Gas is highly volatile and extremely explosive. Never use matches or open flame to test for leaks. Use only approved LP-Gas leak testing solution to test for leaks. Unapproved solutions can damage copper tubing and brass fittings. Never attempt to adjust LP-Gas regulators without the use of proper equipment. Improper LP-Gas regulator adjustment will affect the performance of LP-Gas operated appliances. Incorrect flame or explosion can occur. Only qualified personnel should perform any maintenance or repair to the LP-Gas system.**

## LP-GAS DISTRIBUTION LINES

A primary manifold black steel pipe running throughout the motorhome distributes LP-Gas to secondary lines. All secondary lines leading to gas appliances are made of copper tubing with flared fittings. If any lines rupture do not attempt to splice them. Always run a new line. We recommend gas distribution work be performed by an authorized dealer or an authorized service technician. When removing or servicing a gas appliance, manually close the primary shut-off valve located on the side of the LP-Gas tank. This will prevent dangerous gas leakage that could result in an explosion and possible serious injury. If you suspect a gas leak, get the system inspected and repaired by a qualified service technician as soon as possible.

**INSPECTION: Inspect the rubber flexible lines, twice a year, for abrasions, tears, kinks or other signs of damage.**

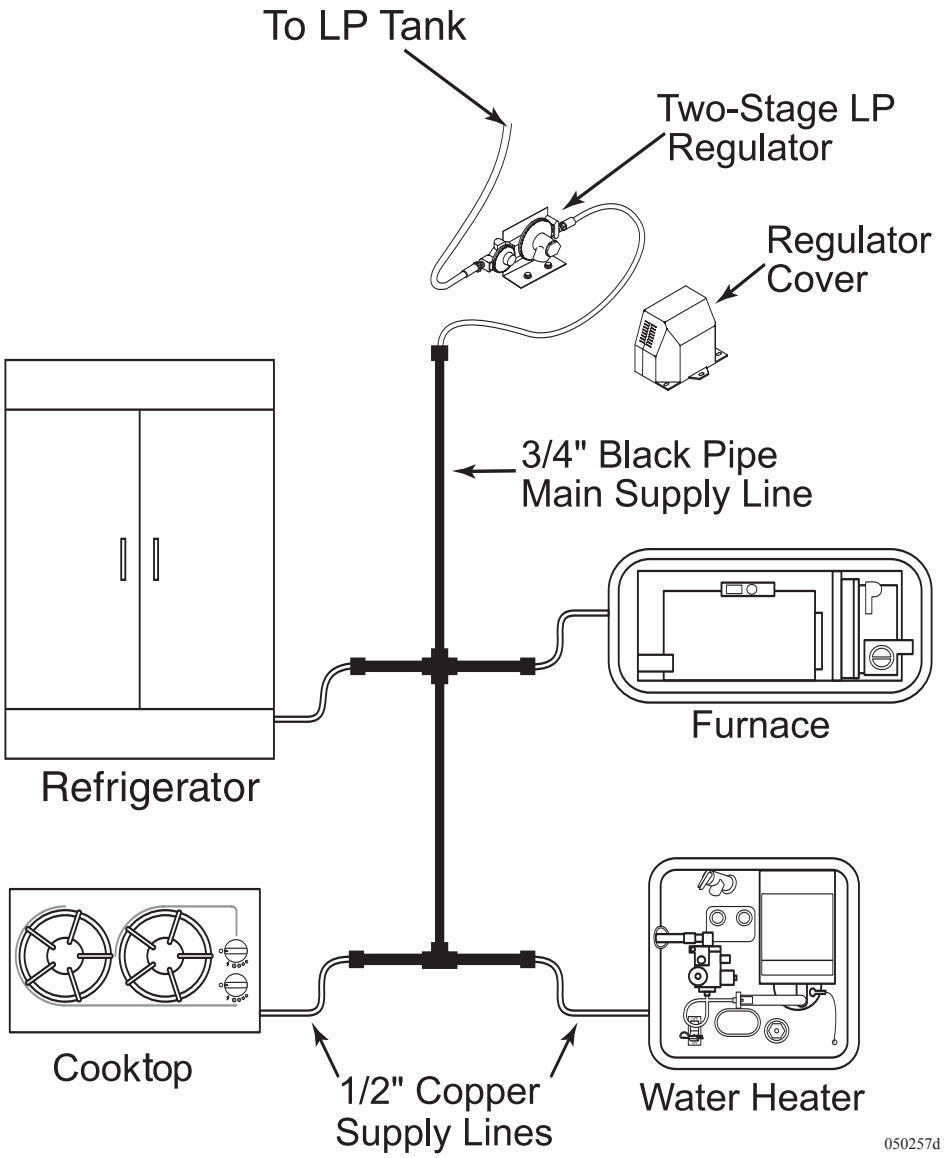

Liquid Propane gas is one of the safest and most reliable fuels available on the market if it is handled properly. LP-Gas, however, does have a great "explosive potential" if handled improperly. Danger is minimized by becoming familiar with and following a few safety precautions, and by learning how to properly operate LP-Gas appliances. Use of LP-Gas requires the responsibility to enforce extra safety measures.

The motorhome is equipped with many LP-Gas operated appliances because it is a convenient and efficient source of fuel. LP-Gas appliances must be operated and maintained in accordance with the product manufacturer's instructions.

The National Propane Gas Association (NPGA) has a special service program offered called GAS® (Gas Appliance System) Check. The GAS® Check program is aimed at educating the users in the association about the convenience of propane use with safety and peace of mind. For information on the NPGA Gas® Check program, call (630) 515-0600 or visit www.npga.org.

**LP-Gas Tanks and Cylinders:**

Tanks are built to American Society of Mechanical Engineers (AMSE) Code. The cylinders are built to DOT (Department of Transportation) Code. The major difference between cylinders and tanks is in required testing and inspection procedures and in the construction of the containers. Both tanks and cylinders are required to undergo pressure testing and inspections; however, the procedures for how they are tested and inspected differ.

The difference between the two codes are that the valves, fittings and brackets are located only on the ends of the DOT cylinders; however, on the ASME tanks they may be located on ends, as well as the sides. There is also a difference in how the tanks are rated. Required tank ratings are in gallons (ASME ratings) or pounds (DOT) water capacity. The Federal DOT (Department of Transportation) regulations require periodic inspections and re-qualifications of cylinders.

American Society of Mechanical Engineers (AMSE) tanks or bulk containers are generally used in the motorhomes and motorized products. These tanks are permanently mounted on the unit.

An alloy steel two-piece welded brazed tank is used on all towable products. The marking on the collar, DOT 4BA240, identifies the DOT specifications and service pressure. Other pertinent information included on the collar is the water capacity (WC) and the tare weight (TW), both which are measured in pounds, and the Manufacture date (one of the most important items). There is a required 12 year re-qualification. The final piece of information is for the Dip Tube (DT) length. This is part of the overfill protection and maximum liquid allowance in the cylinder.

**Maintenance and Safety Tips for the LP-Gas Refrigerator and the Propane Furnace:**

- Have the refrigerator, furnace and venting inspected annually by an authorized service center.
- Before firing up the refrigerator, or using the propane gas furnace for the first time each season, have the venting system checked for blockage. Insects may have built nests that will obstruct flow.
- At the first indication of incomplete combustion (yellow flame instead of a blue flame or soot is present) contact a service technician immediately. Improper combustion can cause carbon monoxide buildup, which is potentially fatal!

**Maintenance and Safety Tips for the Propane Range:**

- Burner flame should be a blue color, indicating complete combustion. If not, have the unit serviced by a qualified technician.
- Do not cover the oven bottom with foil. Air circulation will be restricted.
- Never use gas ranges or ovens for heating purposes.
- Always have pot handles turned inward.
- Ensure children understand never to turn or play with the knobs on the front of the propane gas range.

**Maintenance and Safety Tips for the Propane Water Heater:**

- Test the operations of the temperature and pressure relief valve. Maintain setting at no more than 210° F. to reduce the chance of hot water scalding.
- Keep flammable substances away from the water heater. Do not store items close as this may block the airflow the water heater needs to operate properly.
- At the first indication of incomplete combustion (yellow flame instead of a blue flame or soot is present) call a service technician immediately. Improper combustion can cause carbon monoxide buildup, which is potentially fatal!

## ~ NOTES ~

## ~ NOTES ~

# LaPalma - Electrical Systems


**ELECTRICAL SYSTEMS - INTRODUCTION .....291**
Converter (55 Amp Only) .....291
Shore Power.....292
Generator .....292
**DC 12 VOLT SYSTEM.....292**
**BATTERY CUT-OFF SWITCH.....293**
**BATTERY DISCONNECT.....294**
House .....294
Chassis .....294
**SHORE POWER HOOK-UP.....294**
**TRANSFER SWITCH.....297**
**GENERATOR - 120 AC.....298**
Generator Exercise .....299
**30 AMP DISTRIBUTION PANEL.....300**
Fuses & Circuits .....300
**50 AMP DISTRIBUTION PANEL (OPT).....301**
House 110 AC Panel .....301
Energy Management System .....302
House 12 Volt.....305
12 Volt Distribution Panel - Outside.....305
**INVERTER - 130 WATT (OPT) .....306**
**INVERTER/CONVERTER - 1500 WATT (OPT) .....307**
Battery Charging.....307
Remote Panel .....308
Battery State Indicator .....309
Circuit Breakers .....309
Stand-By Mode .....309
Power Shore.....310
Charge Cycles .....310
Pass-through Relay .....310
Programming the Inverter .....311
Temperature Sensitive Charging.....311
**12 VOLT DISTRIBUTION PANEL - FRONT.....312**
Ford Chassis .....312
Workhorse Chassis .....314
Circuit Breakers .....315
Tools of the Trade .....316
Knowing When to Say No .....316
**BATTERY - HOW IT WORKS.....317**
Battery Types .....317
Battery Maintenance .....318
Testing the Batteries .....319
Battery Maintenance .....320
Seven Reasons Why Batteries Fail .....321
Battery Voltage & Current .....322
Battery Charge Time & Consumption Rate .....323
**WORKHORSE GAUGES .....325**
**FORD GAUGES.....328**
**SWITCHES.....330**
**CONTROLS.....331**
**CENTER CONSOLE PANEL .....336**
**STEERING WHEEL (FORD CHASSIS) .....336**
Cruise Controls .....336
Tilt Steering .....337
Wiper/Washer Operation .....337
Turn Signals & Headlight High/Low Beams .....338
Overdrive Lock-out Switch.....338
Hazard Flasher.....338
**SMART STICK WORKHORSE CHASSIS.....339**
Operation .....339

## ELECTRICAL SYSTEMS - INTRODUCTION

The standard electrical system of the motorhome consist of 120 Volt AC and 12 Volts DC (direct current) systems. The motorhome 120 Volt AC system can be operated from two different power sources. Shore power is the most efficient and should be used whenever possible. The on-board generator has a limited amount of 120 Volts AC output power. This can be used when shore power is unavailable.

The motorhome 120 Volt AC is equipped with a UL listed power cord, a UL listed circuit breaker panel, transfer switch, convertor and generator package. Additionally a 50 amp upgrade, inverter package and energy management package can be installed.

Input power to the motorhome is supplied from two different sources: shore power cord or the on board generator. The selection of the power source being used is done automatically by the use of an automatic electrical switching device known as a transfer switch.

**WARNING: The electrical system is engineered and tested for complete safety. Circuit breakers and fuses protect the electrical circuits from overloading. If you plan modifications or additions to the electrical system, we strongly recommend consulting your dealer for assistance to ensure continued integrity and safety of the electrical system. Please note that any modifications may void the warranty.**

## *Converter (55 Amp Only)*

The power converter is designed to provide a filtered 12 Volt DC power to the lighting and appliance circuits. It will also recharge and maintain the unit's house battery. The power converter is virtually maintenance free. There are some tests which can be performed to ensure the power converter is functioning properly.

- The output on terminals should read 13.6 Volts DC +/- .3 Volts.
- Inspect the fuses to ensure they are not blown.
- The power requirement for the converter is 120 Volts AC.

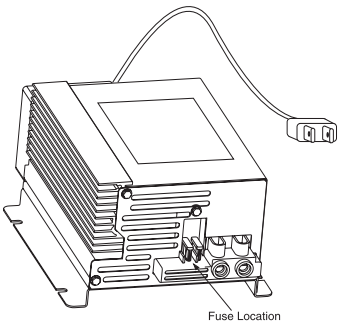

Typical View of Converter
OM060087.eps

If the converter output is correct, but the battery is not charging, there may be a problem with an open wire between the converter and battery.

If the fuses are blown, the battery was connected in reverse. It only takes one second of reverse connection to blow the fuse.

If the power requirement for the converter is met, the fuses are good, and there is no output from the converter, the converter is bad and will need to be replaced.

## *Shore Power*

The AC system power requirement for the motorhome is 120/240 Volt AC single phase. This can be either 20 amp, 30 amp or 50 amp service. Ensure the power distribution panel is configured to handle the load. If shore power service is available connect the motorhome to the shore power source using the supplied shore power cord. The shore power cord plugs into the shore power source and can be "dog boned" to the smaller receptacles. The motorhome shore power cord is located on the road side of the motorhome and is permanently attached.

**NOTE: In many instances 50 amp shore service is not available and care will have to be used when operating the appliances and using the outlets so as not to overload the shore power service being used.**

## *Generator*

The generator can be selected for use when AC shore power is not available. The motorhome's on-board generator has limited 120 Volt AC power output capabilities. The generator's maximum amount of output power is specified in watts, which is calculated at an elevation of 500 feet above sea level. The figure will decrease with a higher altitude. Temperature also affects total maximum output. Fuel consumption is based upon a percentage of AC electrical load applied to the generator. While using the generator care will have to be taken when operating appliances and outlets so as not to overload the generator. The generator is fueled from the main fuel tank.

## DC 12 VOLT SYSTEM

A majority of the lighting and appliances are designed to operate from 12 Volt DC (direct current) power. This is why the batteries play such an important role in the function of the motorhome. There are exceptions with appliances such as the microwave or television. The chassis functions (engine, transmission, dash air, etc.) are also 12 Volt DC.

With the all technological advancements taking place in the past several years, manufacturers have now incorporated electronics into these systems. It is important to keep the 12 Volt system(s) in good working order. These systems, with their incorporated electronics, are voltage sensitive. Some items can be damaged if the DC voltage is not maintained within the designed specifications.

There are two separate 12 Volt systems. One is the chassis system, the other is the house system. These two systems, for the most part, are separate from one another. The house system does not operate engine functions, as the engine system does not operate house functions. Each system will supply 12 Volt DC power to the 12 Volt distribution panels. The 12 Volt panel that services a majority of the chassis system functions is located outside on the front firewall. Another panel is located inside under the dash in the driver's area. The 12 Volt panel for the house is located in the roadside storage compartment. The panel located in the bedroom services the house interior functions, such as the interior lighting and appliances. You should become familiar with these panels and the items they operate.

The two different systems, engine and house, have their own set(s) of battery(s). The engine battery supplies 12 Volt DC power to the chassis distribution panels. The panels contain mostly engine system fuses and wiring, such as headlights, taillights, dashboard functions, gauges, etc. The house battery(s) supplies 12 Volt DC power to the house distribution panels. The panels contain fuses for the house, interior lighting and appliances such as the furnace and the water heater.

Each panel electrical circuits may be protected by fuses, fusible link cartridges, circuit breakers or a combination of these devices.

## BATTERY CUT-OFF SWITCH

The battery cut-off switch is located inside and next to the entry door. This switch controls the 12 Volt DC power to the domestic fuse panels. When the switch is ON power is supplied to all interior DC lighting and DC operated appliances. Some appliances will require both DC and AC power to operate, such as the roof air conditioner. This switch is helpful when dry camping and can be used to conserve house battery power. Refrigerator and inverter operation are unaffected by the operation of this switch. When turned off, this switch will not stop all parasitic loads.

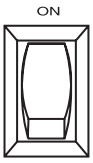

OM060107C

## BATTERY DISCONNECT
### *House*

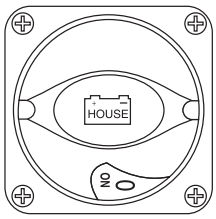


060077b

The main house battery disconnect switch, located in the battery compartment, turns the battery power supply on or off. The domestic battery disconnect switch shuts off the 12 Volt DC power to the following items: domestic fuse panel in the bedroom, domestic fuse panel in the front run box and the domestic power supply in the rear run box(s). Turn the main battery disconnect switch off when the motorhome is going to be stored or before performing electrical maintenance on the motorhome. If possible, leave the motorhome plugged into an AC source with the battery disconnect switch on. This will help prevent the possibility of dead batteries. Use of the battery cut-off switch at the entry door will not turn off all DC electrical items or other parasitic loads. Small (parasitic) loads are present on the house battery. Some are federal mandated items such as the LP-Gas detector.

**NOTE: If an AC source is not available and the motorhome is not going to be used or is stored more than 48 hours it is recommended to turn the battery disconnect switch off.**

### *Chassis*

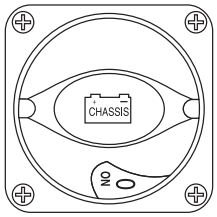


06077c

The main battery disconnect switch, located in the roadside compartment in front of entrance door, turns the DC power on or off to the chassis fuse boxes. Most chassis and engine functions are interrupted when the battery disconnect is turned off. Some electronic items require a constant power source for memory retention, such as the dash and CB radios. Some electronic components of the engine and transmission require a constant power source. Turn the main battery disconnect switch off when the motorhome is going to be stored or performing electrical maintenance.

## SHORE POWER HOOK-UP

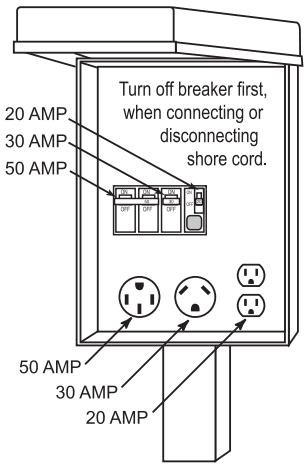


OM020125

The power requirement for the motorhome is 50 Amp 120/240 Volt AC single phase. The shore cord is stored in the roadside compartment. If 50 Amp shore power service is available, all that is necessary is connect the supplied shore power cord. If 50 Amp service is not available, electrical adapters will be required.

**CAUTION: Avoid flash damage to the electrical system contacts. Before hooking up to shore power, starting the generator or using the inverter make sure all the appliances are off.**

**WARNING: Keep fingers away from metal contacts of the shore plug end. Avoid standing in water when making electrical connections. Serious electrical shock and personal injury can occur. To avoid the risk of an electrical shock, turn the circuit breaker off for the power supply outlet before making the shore power connection.**

**CAUTION: Do not remove cover from shore power supply to troubleshoot electricity to the motorhome. Serious personal injury or death may occur. If there is no power to the motorhome inform the park manager. It is the park manager's responsibility to fix any problems with the park's shore hook up.**

**Plugging in the Shore Cord:**

- Located in the roadside compartment is the shore power cord.
- Unscrew the deck plate and extend a sufficient amount of cable through the deck plate to reach the socket.
- Align cord end with socket terminals. Insert and rotate end clockwise ¼ turn locking end into socket.
- If 50 Amp service is not available, install the proper electrical adapters to the cord.
- Always turn off the shore power breaker to the power supply outlet before connecting or disconnecting the shore cord. This will prevent an accidental shock and flashing of electrical contacts.
- Make the connection to the outlet and turn the shore power breaker on. The transfer switch should make an audible click.

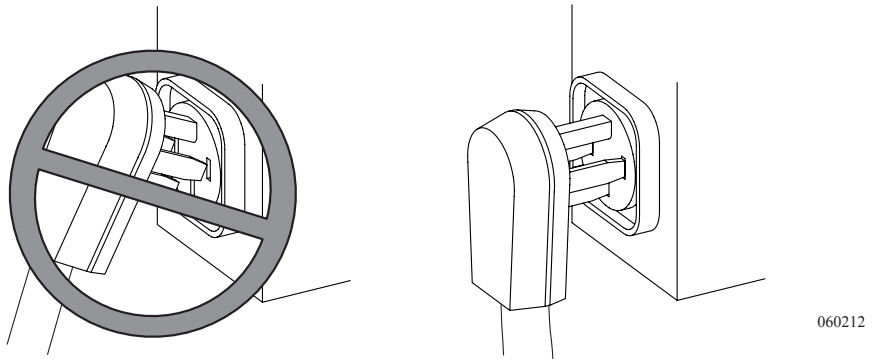


Incorrect Method  Correct Method

After connecting the motorhome to shore power, wait approximately one minute for the inverter/charger or converter to "stabilize" charging of the batteries before starting air conditioners or other large AC loads. In the instance 50 Amp service is not available, use caution not to overload the supplied shore service breaker. Operate appliances and outlets in sequence rather than all at the same time.

**Disconnecting the Shore Cord:**

- Turn off all AC appliances. This will prevent accidental shock and flashing of electrical contacts when disconnecting.
- Turn off the shore power breaker.
- Grasp housing of electrical cord. Without touching electrical contacts, work cord out and away from socket.
- Straighten, clean and store cord.

**Power Supply:**

Different amperage supplies vary greatly in the amount of available current.

- The continuous amount of current through a breaker or fuse is only 80% of its rated capacity.
- 50 Amp 220 Volt AC shore power service consists of two power supply conductors, a neutral and a safety ground. The 50 Amp breaker simultaneously limits each power supply conductor to no more than a short-term maximum of 50 Amps for each conductor. The 50 Amp 220 Volt service actually provides 80 continuous amps.
- Use care when hooked to anything less than 50 Amp shore service. Shore power service less than 50 Amps consists of one power supply conductor, a neutral and a safety ground. 30 Amp shore service is limited to 24 continuous amps. 20 Amp shore service is limited to 16 continuous amps.

**Electrical Adapters:**

There are many different electrical adapters available to suit a variety of needs. Only UL approved adapters should be used. The most common adapter is a 50-30 Amp adapter to adapt the 50 Amp shore cord to a 30 Amp shore power outlet. Always install the adapter to the cord prior to making the connection to the outlet.

Another common adapter is a 30 to 15 Amp adapter. This type of connector adapts the 30 Amp shore cord to a 20 Amp shore power outlet.

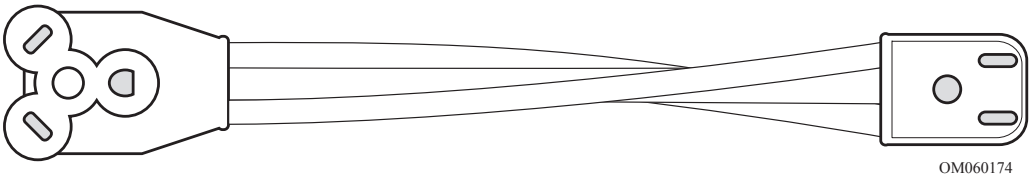


**CAUTION: If shore power service is limited to 15 or 20 Amps, use of light duty extension cords and electrical adapters will create a voltage loss through the cord and at each electrical connection. Line voltage loss and the resistance at each electrical connection can be a hazardous combination. Damage to sensitive electronic equipment may result!**

**CAUTION: Avoid the risk of electrical shock or component damage by disconnecting from shore power during electrical storm activity. Use the inverter or start the generator if AC power is needed.**

**NOTE: Shown below are the three types of shore power outlets most commonly used.**

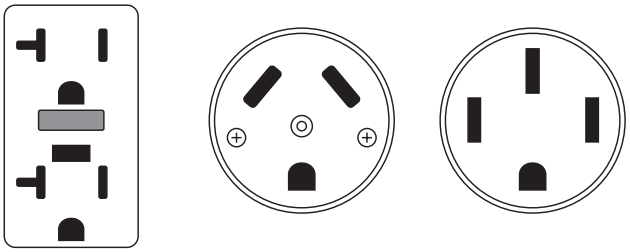

20 AMP Outlet 30 AMP Outlet 50 AMP Outlet

OM060092.eps

## TRANSFER SWITCH

The transfer switch automatically transfers AC power from the shore power cord or generator through the transfer switch to the 110/220 Volt AC breaker panel. When using the generator as the power source, the transfer switch has a time delay built into it before transferring power to the AC breaker panel. This allows the generator time to warm up before applying an AC load. When operating the generator while hooked to shore power, the transfer switch automatically selects generator power as priority over shore power.

**NOTE: The shore cord is NOT electrically connected to the generator. When the generator is operating, the electrical contacts of the shore cord are not electrically energized.**

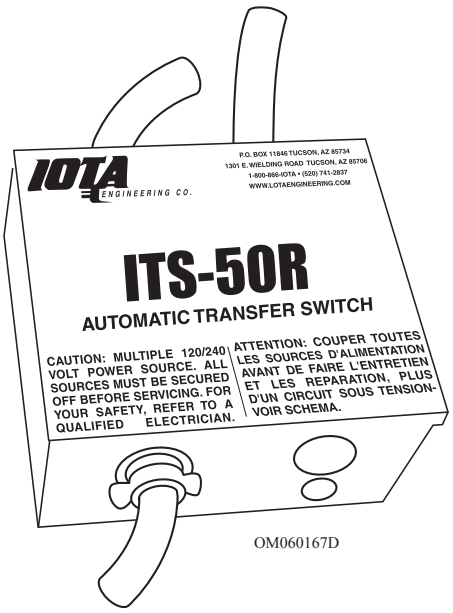


OM060167D

## GENERATOR - 120 AC

The 120 Volt AC gasoline generator is located in a service compartment on the roadside of the motorhome. The generator may stop running before the chassis fuel tank is completely empty. This is a safety feature to prevent the motorhome from running completely out of fuel.

**Starting the Generator:**

The generator is controlled by either a remote switch on the dash or a switch located on the generator. To start the generator shut off all 120 Volts AC appliances and equipment. Push the start switch and hold until the generator is running, then release the switch. The dash switch is lit when the generator is running. Normally the generator will start running within five seconds. If it fails to start after cranking for 10 seconds, release the switch and wait 30 seconds before cranking again. If the generator fails to start after five attempts, allow the starter motor to cool down for five minutes before cranking again.

**Stopping the Generator:**

Turn off all 120 Volt AC appliances and equipment and run the generator for at least three minutes before turning it off. This allows lubricating oil to carry heat away from the combustion chamber and bearings. To stop the generator push the switch to the stop position for approximately one second and then release it.

**For in-depth information regarding low oil shut-down protection, circuit breaker locations and maintenance procedures, refer to the manufacturer's brochure in the Owner's information file.**

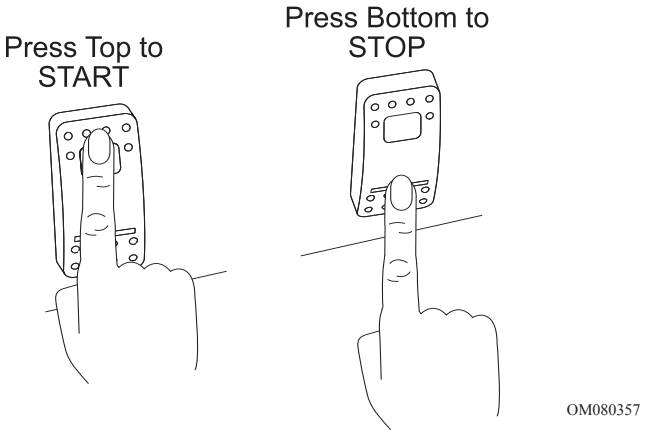

**WARNING: When the motorhome is parked, position the dash air conditioner vent control in the OFF position to prevent exhaust gases from entering the motorhome. The engine exhaust contains carbon monoxide, which is an odorless and colorless gas. Carbon monoxide is poisonous and can cause unconsciousness and/or death. Inspect the exhaust system thoroughly before starting the generator. Do not block the exhaust pipe or situate the motorhome where the exhaust may accumulate either outside, underneath, or inside the motorhome or any nearby vehicles. Operate the generator only when safe dispersion of exhaust can be assured. Monitor the outside conditions to be sure that the exhaust continues to disperse safely.**

**WARNING: When parking near high grass, be sure that the hot exhaust does not come into contact with the grass, it could be a fire hazard. Hot exhaust pipe or hot exhaust gases can ignite the grass.**

**CAUTION: An exhaust extension adds weight and stresses the generator exhaust system. Damage to the exhaust piping or exhaust manifold can result, allowing Carbon Monoxide gases to accumulate under or leak into the motorhome.**

## *Generator Exercise*

If use of the generator is infrequent, “exercise” the generator once a month by operating it at approximately half the maximum rated output for two hours. This “exercise” will help promote better starting, more reliable operation and longer engine life. This procedure drives off moisture, relubricates internal engine parts, replaces the old stale fuel with a fresh supply, and promotes removing oxides from the electrical switches and contacts.

**NOTE: Avoid short run periods of the generator set. Run the generator set under a load for a minimum of one-half hour.**

## 30 AMP DISTRIBUTION PANEL
### *Fuses & Circuits*

The 12 Volt house contains fuses (located in the bedroom cabinet) that protect the electrical circuits. These fuses are the standard automotive type. When a fuse is "blown," the wire in middle of the plastic case will be burnt. A broken, bad or "blown" fuse must be replaced with a fuse of the same rating and type. Use of a fuse with a different rating or type will defeat the circuit protection provided by that fuse and could result in damage to the motorhome's electrical system.

**Fuse Assignments are as Follows:**

1. Bath Lights/Vents - 15 Amp Fuse
2. Dinette/Porch/Rt. Overhead - 15 Amp Fuse
3. Bedroom/ODS Lights - 15 Amp Fuse
4. Kitchen/Left Overhead, Stove Vent (Opt Vent - 15 Amp Fuse)
5. Ceiling Lights - 15 Amp Fuse
6. Furnace - 15 Amp Fuse
7. Monitor Panel - 15 Amp Fuse
8. Slide-out - 15 Amp Fuse
9. Radio - 5 Amp Fuse

**Circuit Breaker Assignments are as Follows:**

**Left Side**
- 50 AMP MAIN
- Front Air Conditioner
- Rear Air Conditioner

**Right Side**
- Converter, Bedroom TV, Dining Room
- Bathroom, Kitchen, Refrigerator, TV, VCR
- Water Heater
- Microwave

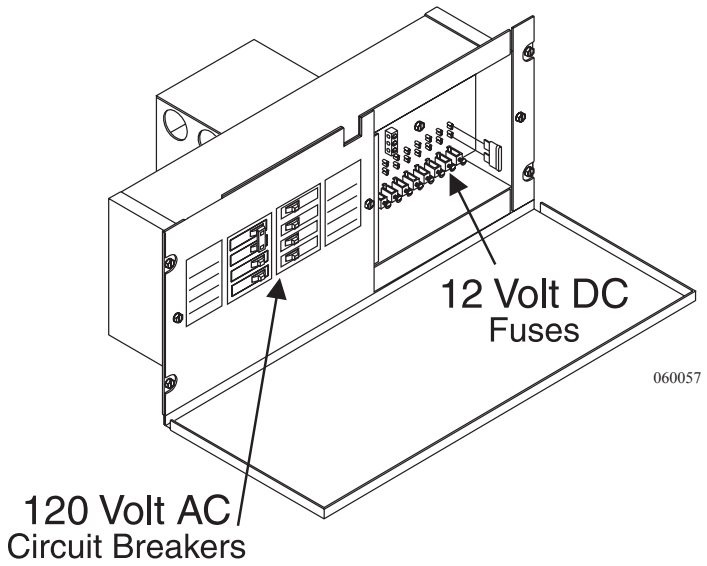

## 50 AMP DISTRIBUTION PANEL (OPTIONAL)

### *House 110 AC Panel*

The AC distribution panel is located in the bedroom. The main AC panel 120 Volt circuit breakers receive power from the transfer switch, which is powered by either shore power or the on board generator. Power is introduced into the panel to the 50 Amp MAIN breaker first, followed by power being fed into the individual branch circuit breakers. The panel label describes the breaker layout and the item, outlet or appliance to which they pertain.

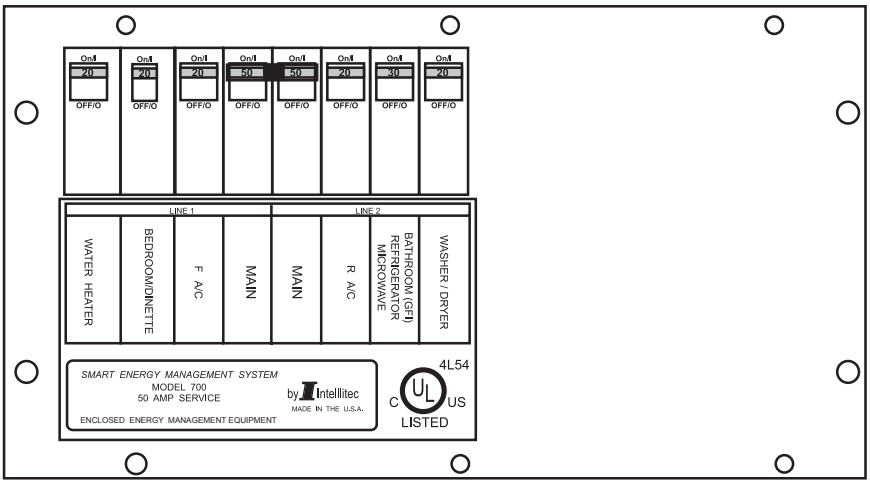


OM060101.eps

**WARNING: This panel contains high voltage which can cause serious injury or death. Before beginning any work or testing procedures involving the electric panels, or any of the branch circuits, be sure the motorhome is unplugged from shore power and the generator is not running. Certain testing procedures can require the AC power to be on. Only qualified personnel or personnel with electrical backgrounds should attempt any testing procedures.**

Branch circuit breakers supply AC power to the different items or “loads.” An electrical load is any item or device that will use current when supplied with an electromotive force. Should a breaker “trip” from over current use, or a short circuit condition, the load to which the breaker is supplying the electromotive force should be reviewed or disconnected to determine the cause of the trip. If no cause is found, or not readily apparent, reset the breaker by toggling the breaker to the OFF position, then back to ON. Should the breaker trip again after the load is reapplied it may indicate a fault with that particular load. Do not continue to reset breaker until the problem has been diagnosed and corrected.

Breaker current ratings are current set points in which the breaker is designed to operate. The internal configuration of the circuit breaker is designed to trip when excess current is drawn through the breaker. The trip action of the circuit breaker can occur within milliseconds due to the speed at which electricity can travel. Breaker ratings are set to operate on a continuous

load at 80% of the breaker's rated capacity. For example: A breaker with a 20 amp rating will handle a continuous load of 16 amps. This designed set point is when an inductive load is applied, such as when an electric motor turns on. As the motor starts to spin, current consumption may momentarily exceed the rated capacity of the breaker. As the electric motor comes up to operating speed the electric motor's current consumption will fall. The AC current load then falls back into the breaker's rated 80% set point. This electric principle should be kept in mind when using anything other than 50 amp shore service and using appliances with electric motors. When using outlets care should be considered when applying loads such as electric motors, heaters, coffee makers, toasters, hair dryer or other large current consuming loads. If the current rating of a load is not known it is usually stated on most electrical items. The rating will either be in amps or watts. Current ratings stated on electrical items will change slightly with voltage fluctuations. As voltage increases current consumption decreases. As voltage decreases current consumption increases. This may explain why in some instances items operated at borderline voltage to current tolerances may seem fine in one location but problematic in another.

**NOTE: To calculate watts to amps simply divide the watt figure by the voltage of which the item operates from. For example: The electrical item is rated at 1370 watts. Divide that by the operating voltage of 115 volts which equals 11.913 amps. Use this formula to calculate load to current supply ratio.**

## *Energy Management System*

The Energy Management System is easily identified by the remote display panel located inside motorhome.

The 50 Amp Smart EMS consists of two elements: the display panel and the bedroom distribution panel. The distribution panel, located in the bedroom, is a completely self-contained 120/240 Volt power distribution and energy management system intended to be used in recreational vehicles. Housed in a sheet metal enclosure with removable front panel, the panel provides circuit protection for all the 120 Volt AC loads in the motorhome and a system of energy management to minimize the over-loading and tripping of circuit breakers.

**Circuit Breakers:** The distribution panel offers slots for eight single or dual, standard 120 Volt circuit breakers. Two of these breakers, located in the two center stab positions, must be a 50 Amp unit that act as a main input protection for each of the lines supplying the remainder of the branch breakers (up to 12).

**Energy Management:** The 50 Amp Smart EMS automatically senses available power to the motorhome, determining whether it is connected to a 120 Volt AC - 30 Amp shore power source, 50 Amp shore power source or generator source. Depending upon available power, the EMS controls the operation of 6 possible loads as indicated on the distribution panel. These may be any type load, but are typically heavier loads; those whose use can be "postponed until a time when current is available for use. If the available power source is 120 Volt AC - 30 Amp shore power, the EMS attempts to keep the total 120 Volt current draw to less than 30 Amps.

**Operation:** If 120 Volt AC is not available at the distribution panel L1 or L2 outputs, the system shuts itself off. This feature is intended to prevent the system from drawing current from the +12 Volt DC battery supply when not in operation.

When 120 Volt AC power is applied, the system automatically powers up and determines the nature of the power source.

If the generator is running, 120 Volt AC will be present at the distribution panel L1 and L2 inputs. In this mode the energy management feature is disabled and all control relay contacts are closed, energizing all of the controlled loads. The control module sends a signal to the display panel causing the load meter to display actual load current, the GEN SET service indicator to light and all power status indicators to light.

If 120 Volt AC is present at the distribution panel L1 and L2 inputs, the system will assume that 120 Volt AC, 30 Amp shore power is available and enable the energy management feature. **If only 20 Amp service is available the user must select the 20 AMP service mode by momentarily pressing the 20/30 Amp select switch on the Control Panel.** Initially, all relay contacts are closed and the total current is monitored. If the total current should exceed the service limit, the system will turn off the first load in the shedding table, calculating the amount of current that was removed, which is the value for that load. This value is placed in memory. If the current remains above the service limit, the system will turn off the next load in shedding table. Again calculating the amount of current that was removed and placing this value, which is the value of that load, in memory. The system continues to turn off loads until the total current falls below the service limit or all of the six controlled loads have been shed. Through this process the system has "learned" the amount of current that each particular load draws. This feature compensates for the differences in current draw over a range of line voltage and ambient temperature, by re-learning the load each time it is turned off or "shed."

The 50 Amp Smart EMS now waits until the total current is lower than the service limit and enough current is available (as compared with the amount in memory for the last load shed) before turning that load back on. This assures that there is sufficient current to operate the load.

**NOTE: There is a two minute minimum delay period after a load is shed before the load will be turned on again to prevent air conditioners from turning on with a head pressure.**

**Three Hour Averaging:** The RVIA (Recreational Vehicle Industry Association) in conjunction with the NEC (National Electrical Council) have established rules regarding the rating of electrical systems and the use of energy management systems. One of these rules requires that, if any energy management system is used, the average total load current for the system over a 3 hour period be limited to 80% of the service rating. For that reason the 50 Amp EMS calculates the average running current for the system, and if it exceeds 80% of the service rating, the EMS sheds loads to reduce the average current below that limit.

For example, if a system operating under 120 Volt AC, 30 Amp service has been running at the 30 Amp limit for three hours, the EMS will change its shedding threshold to 24 Amps and turn off loads until the 24 Amp limit is attained. If the user selects the 20 Amp service mode this limit will translate to 16 Amps. Because the EMS calculates a running 3 hour average, if the average load current drops below the limit the system will restore power to loads based on their impact on the limit. If the system is in the averaging mode the decimal point at the lower right corner of the load meter display on the display panel will illuminate.

**Display Panel:** The display panel connects to the distribution panel located in the bedroom. Six power status LED's indicate power is applied to those loads. These LED's are on when the power is applied. The load meter has a two digit display to indicate the amount of current actually being drawn by all the appliances in the motorhome.

Four service type LED's indicate the source for 120/240 Volt AC power. Three of these sources are automatically detected and indicated by the EMS, namely: Gen Set Service, 50 Amp Service and 30 Amp Service.

**The 20 Amp service mode is not automatically detected and the operator must manually select the 20 Amp mode when 20 Amp service is available.** The service select button allows the current threshold to be set to either 30 Amps or 20 Amps, to match the incoming service.

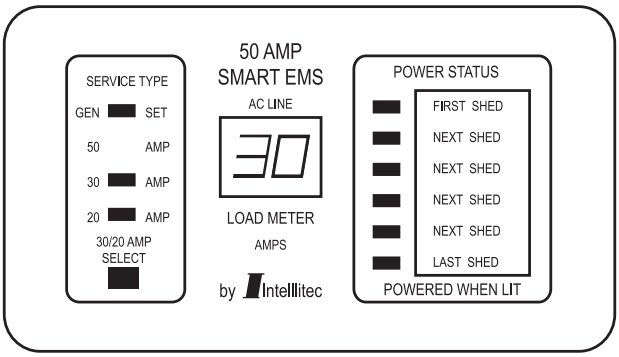


OM060082.eps

## House 12 Volt

The 12 Volt house contains fuses (located in the bedroom overhead cabinet) that protect the electrical circuits. These fuses are the standard automotive type. When a fuse is “blown,” the wire in middle of the plastic case will be burnt. A broken, bad or “blown” fuse must be replaced with a fuse of the same rating and type. Use of a fuse with a different rating or type will defeat the circuit protection provided by that fuse and could result in damage to the motorhome’s electrical system.

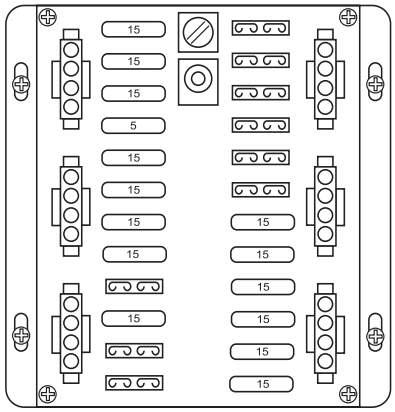


| # | Color | Amp | Circuit |
|---|---|---|---|
| 1 | Blue | 15 | Closed Bathroom |
| 2 | Yellow | 15 | Ceiling/Porch Lt |
| 3 | Green | 15 | Bedroom Lts |
| 4 | Violet | 15 | Vent |
| 5 | Red | 15 | Ceiling Lts |
| 6 | Red | 15 | Power Awning |
| 13 | Gray/Black | 15 | Rear Radio (Opt) |
| 14 | Brown | 10 | Rope Light (Opt) |
| 15 | Orange | 5 | Open Bathroom |
| 16 | Gray | 15 | Furnace |
| 17 | Red | 15 | Monitor Panel |
| 18 | Gray | 15 | Dash Radio |
| 19 | Green | 15 | Rear Road S/O (Opt) |
| 20 | Black | 15 | Rear Curb S/O (Opt) |
| 21 | Violet/Black | 15 | Ext. Radio (Opt) |
| 22 | Green/Black | 15 | 110V Water Heater Relay |
| 23 | Gray/Black | 15 | Kit/Furnace (Opt) |

## 12 Volt Distribution Panel - Outside

The distribution panel (12 Volt DC) is located inside the front roadside compartment. Fuse assignments are listed on a fuse label attached to the inside cover of the front distribution panel. When replacing fuses always replace with the same size as listed for a particular location. Fuse sizes shown are maximum fuse size allowable. Installing fuse sizes other than those listed can cause electrical wiring to become overloaded and create hazardous situations.

P/N 03212843

| | FUSE NO. | DESCRIPTION | MAX FUSE SIZE |
|---|---|---|---|
| | | CHASSIS | |
| C401 (F) | 4-1 | STEP MOTOR | 25 |
| | 5-2 | STEP SWITCH | 7.5 |
| | 6-3 | AIR LEVELING | 15 |
| | 3-4 | CHASSIS READ OUT | 3 |
| | 2-5 | AIR LEVELING | 15 |
| | 1-6 | AIR LEVELING | 15 |
| C402 (D) | 4-7 | AIR HORNS | 15 |
| | 5-8 | STEP COVER | 15 |
| | 6-9 | SUNVISOR | 5 |
| | 3-10 | CB RADIO/TEMP | 15 |
| | 2-11 | PWR WINDOW DRV DR | 15 |
| | 1-12 | GAS DLR | 15 |
| | | IGN #2 | |
| C403 (D) | 4-13 | DASH A/C | 20 |
| | 5-14 | JACK/ANT WARNING | 5 |
| | 6-15 | TV/LEVEL LOCK OUT | 7.5 |
| | 3-16 | MIRROR HEAT | 15 |
| | 2-17 | MIRROR MOTORS | 15 |
| | 1-18 | FIRE PLACE | 15 |
| | | RELAY FUSE | |
| C415 (F) | 1-59 | IGN LOCK OUT | 10 |
| | 2-60 | IGN LOCK OUT | 10 |
| | 3-61 | SIDE DOCKING | 15 |
| | 6-62 | REAR DOCKING | 15 |
| | 5-63 | FOG LIGHTS | 15 |
| | 4-64 | DRIVING LIGHTS | 15 |
| | 65 | MARKER LIGHTS | 10 |

| | FUSE NO. | DESCRIPTION | MAX FUSE SIZE |
|---|---|---|---|
| | | IGN #1 | |
| C404 (F) | 4-19 | STEP/ISO SENSE | 7.5 |
| | 5-20 | LEVELING JACKS | 15 |
| | 6-21 | SPARE | 2 |
| | 3-22 | SLIDE-OUT RELAY | 15 |
| | 2-23 | SPARE | 15 |
| | 1-24 | SPARE | 15 |
| | | ACC #1 | |
| C405 (D) | 2-25 | REAR VISION | 5 |
| | 1-26 | POWER GEAR JACKS | 5 |
| | 4-27 | ADJUSTABLE PEDALS | 10 |
| | 7-28 | SPOT LIGHT | 15 |
| | 8-29 | ACCESSORY | 15 |
| | 9-30 | AIR DUMP | 15 |
| | 6-31 | AIR LEVELING | 15 |
| | 3-32 | FOG LAMPS | 15 |
| | | NON SWITCHED HOUSE 12 VOLT | |
| C412 (F) | 4-66 | RADIO MEMORY | 10 |
| | 5-67 | REFER | 5 |
| | 6-68 | SOLAR PANEL | 15 |
| | 3-69 | SECURITY SYSTEM | 10 |
| | 2-70 | SNAP DISC | 5 |
| | 1-71 | HOUSE READ OUT | 3 |
| | | CIRCUIT BREAKERS | |
| | | INTERIOR FUSE PANEL | 50 |

| | FUSE NO. | DESCRIPTION | MAX FUSE SIZE |
|---|---|---|---|
| | | SWITCHED HOUSE 12 VOLT | |
| C406 (F) | 4-33 | DRV POWER SEAT | 15A c.b. |
| | 5-34 | PASS POWER SEAT | 15A c.b. |
| | 6-35 | STORAGE LIGHTS | 15 |
| | 3-36 | SERVICE LIGHT / LP SOL | 7.5 |
| | 2-37 | SPARE | 15 |
| | 1-38 | SPARE | 15 |
| C407 (F) | 2-39 | SPARE | 20 |
| | 1-40 | BAY 12 V RECEPT | 15 |
| | 4-41 | SPARE | 5 |
| | 7-42 | RES SVC LTS/BLOCK HTR | 15 |
| | 8-43 | RANGE | 3 |
| | 9-44 | PWR TOILET | 15 |
| | 6-45 | STEPWELL LIGHTS | 15 |
| | 3-46 | SPARE | 15 |
| C408 (F) | 4-47 | LP/CO DETECTOR | 3 |
| | 5-48 | FREEZER | 15 |
| | 6-49 | DRV S/O PWR #1 | 15 |
| | 3-50 | PASS S/O PWR | 15 |
| | 2-51 | DRV S/O PWR #2 | 15 |
| | 1-52 | PASS S/O PWR BED/LAV | 15 |
| C409 (D) | 4-53 | MAP LIGHT | 7.5 |
| | 5-54 | 12VOLT COMP RECEPT | 15 |
| | 6-55 | AUX START | 5 |
| | 3-56 | DASH FANS | 15 |
| | 2-57 | SPARE | 7.5 |
| | 1-58 | SERV LT/AUX 12V PWR | 15 |

THIS FUSE LABEL COVERS STANDARD AND OPTIONS THAT ARE ASSOCIATED WITH THIS FUSE PANEL.
CHECK YOUR BUILD ORDER TO SEE HOW YOUR COACH IS EQUIPPED.

080427d

## INVERTER - 130 WATT (OPTIONAL)

When the inverter is turned ON and shore power or generator power is not used, inverter operates on power from the house battery. The inverter is located in a front overhead compartment. The inverter supplies AC power to the television and VCR. Use of the inverter operating from the house battery will greatly increase battery power consumption.

The inverter has a 120 AC cord plugged into a 120 AC receptacle. When shore power or generator power is present the inverter automatically turns OFF and 120 AC power is routed directly to the inverter outlet. The outbreaker protects the inverter from over heating and short circuit.

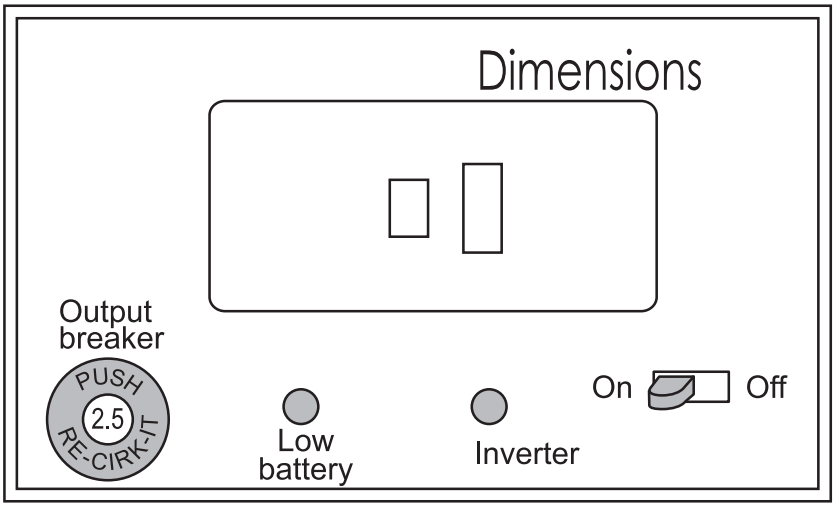


080410

**Operation:**

- Battery power must be greater than 11 Volts for inverter to operate.
- Push slide switch to the ON position. The green LED will be illuminated.
- The red Low Battery light will be illuminated when the battery drops below 10½ Volts and the inverter will turn OFF.
- The inverter should be turned OFF when not in use.

## INVERTER/ CONVERTER - 1500 WATT (OPTIONAL)

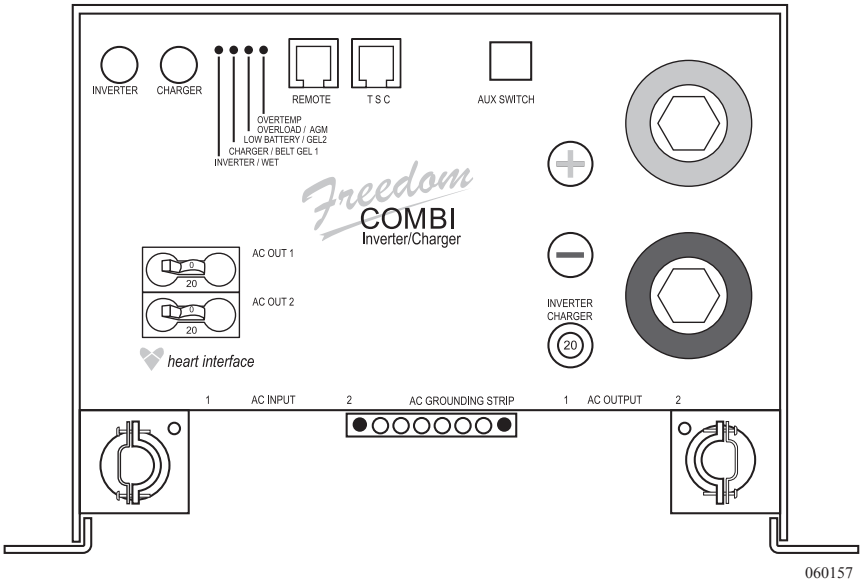


The inverter performs two functions: Changing DC battery power to AC electrical power and charging the batteries when hooked to shore power or operating from the generator. Use the inverter to supply AC power when shore power is not available and the generator is not going to be used as a secondary AC power source. The inverter supplies AC power to most receptacles, the television and microwave. It is important to remember that using the inverter quickly consumes house battery power. Turn off the inverter when not in use to conserve house battery power. The remote control is used to change the variable settings.

**To turn Inverter On:**

• Press the switch marked **INVERT** on the remote panel.

### *Battery Charging*

The inverter will automatically begin charging when AC power is supplied from shore service or the generator. The charger uses a three-stage cycle to charge the batteries. If desired the charger may be turned off.

**To turn the charger OFF or back ON:**

• Press the switch marked "**CHARGE**" on the remote panel.

**INFORMATION: Complete detailed instructions and guidance can be found in the Owner's Information File Box. Please refer to the information booklet provided from the manufacturer.**

## Remote Panel

The remote panel monitors the inverter status and is used to change variable settings. The panel uses LED lights to monitor values when hooked to shore power, inverting or in the set-up mode.

**LED indications when hooked to Shore Power:**
- DC Volts represents DC output voltage at the inverter.
- DC Amps represents the amount of DC charge current.

**LED indications when Inverting:**
- DC Volts represents DC battery voltage at the inverter.
- DC Amps represents the amount of DC discharge current.

**LED indications when in Set-up Mode:**
**(Press and hold SET-UP for five seconds):**
- DC Volts represents the amount of Amp Hours of the battery bank.
- DC Amps represents the amount of load (measured in watts) needed to activate the inverter.
- Incoming AC Breaker Amps represent battery type and operating temperature.

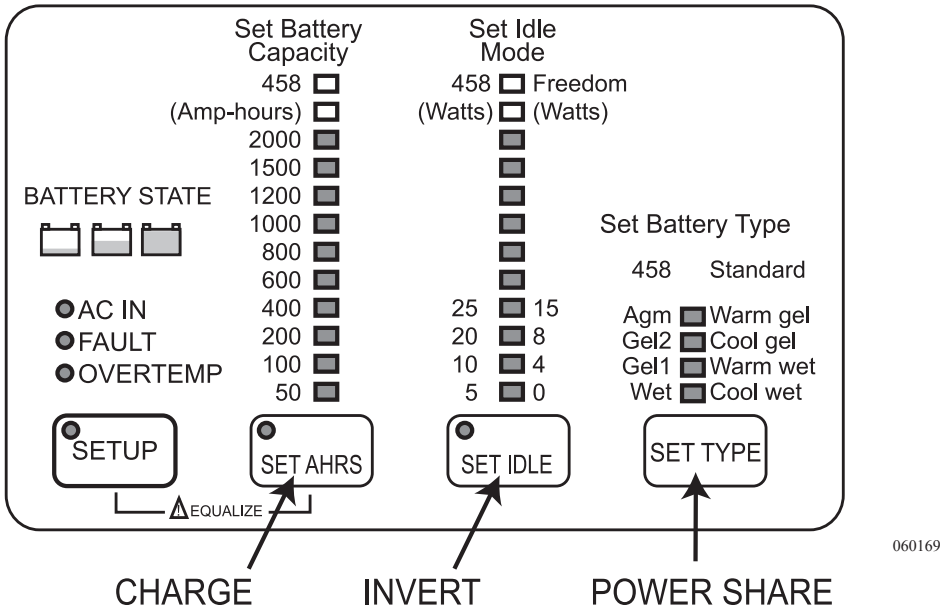

## Battery State Indicator

The battery state indicator performs two functions. When not hooked to shore power the Battery State indicator displays the approximate state of charge of the house batteries. When connected to shore power or operating from the generator, the lamps indicate what part of the charge cycle the inverter is in.

**(A) Red = Bulk Charge**

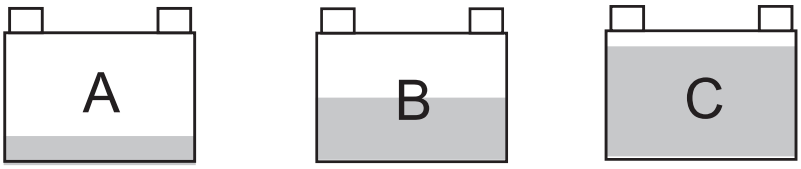


battery state

**(B) Yellow = Accept Charge**

**(C) Green = Float Charge**

## Circuit Breakers

**Battery Charger Circuit Breaker:**
The circuit breaker for the charger is located on the front of the inverter. The breaker is a re-settable breaker in case an over current or short circuit condition occurs within the Battery Charger circuitry.

**AC Out Circuit Breakers:**
Two branch circuit breakers are located on the front of the inverter. One of the branch circuit breakers supplies AC power to various receptacle. The other breaker supplies AC power to the microwave.

## Stand-By Mode

The inverter may be placed in "**STAND-BY**" when hooked to shore power or operating from the generator. If AC power discontinues, the inverter activates automatically. When AC power resumes, the inverter will go back to **STAND-BY** mode. **STAND-BY** mode is indicated by the **INVERT** status light flashing once every two seconds when hooked to shore power or operating from the generator.

**To enable or disable this feature:**
• Press the **INVERT** button.

**NOTE: Remember to disable stand-by mode when not in use. It may run down the house batteries.**

## Power Shore

Setting the Power Share amps can limit the amount of AC power available to the internal charger. Battery charger draw can exceed 20 AC Amps. When hooked to anything less than 50 Amp service it may be necessary, depending on other AC loads, to adjust the Power Share amps to avoid overloading the shore power breaker.

**NOTE: Limiting the amount of useable current for the charger increases the amount of time necessary to charge the batteries.**

## Charge Cycles

The time it takes to fully charge the batteries varies greatly. It can take several hours or even days, depending on the inverter's settings and state of charge of the batteries. The charge cycle is done in three steps:

- **First step is "BULK" charge.**
  The "bulk" charge will bring the DC voltage up high, initially between 14.2 - 14.5 Volts DC, depending on conditions. The length of the bulk charge cycle depends on the condition of the battery, loads and other factors. When the battery voltage attains 14.2 - 14.5 Volts DC, the charger begins the next cycle.

- **Second step is the "ACCEPT" cycle.**
  The voltage in this cycle is the same as the bulk charge cycle 14.2 -14.5 Volts DC. The length of the absorb cycle will vary with state of charge of the batteries.

- **Final step is the "FLOAT" charge cycle.**
  Approximately 80% of the charging has been completed at this time. The float charge voltage is generally around 13.3 - 13.7 Volts DC. The last 20% of the charge cycle of the batteries typically takes the most amount of time. The charging cycle is initiated each time the inverter is disconnected or reconnected to AC power. Repeated charging cycles in succession can lead to boiling of the batteries.

## Pass-through Relay

Incorporated in the inverter is a double pole "pass-through" relay that trips when AC power is supplied to the input terminals. This relay transfers AC power through the inverter to the two circuit breakers located on the front of the inverter. The two breakers supply AC power to various outlets and the microwave. When AC power is supplied to the inverter, the internal battery charger will "ramp up" battery charge voltage. A 20 second time delay allows charge stabilization before pass through AC power is supplied to the breakers.

## Programming the Inverter

The inverter uses a battery temperature sensor to adjust charge voltage. When the battery temperature rises the sensor sends this information to the inverter to decrease charge voltage. Voltage compensation with temperature variation is necessary to keep charge voltage at optimum values. The sensor is secured to the terminal of the battery.

## Temperature Sensitive Charging

Battery Capacity and Idle Mode are adjustable. The program mode must be entered to change a setting.

**To Enter the Programming Mode:**

- Press and hold the **SETUP** button for five seconds. LED lamps will change from **green** to **red**.
- If a setting change does not occur within five seconds, the remote returns to the user menu.
- Use the Remote Owner's Manual to cross-reference the LED lights to their respective indication.

**Idle Mode:**

Setting the **IDLE** mode controls the threshold (in watts) that turns the inverter on from search mode. The adjustment range is 5 to 100 watts. The factory setting is five watts. Press the **INVERT** button to change the settings.

**Battery Capacity:**

Setting the proper battery capacity tailors the internal charger to optimum values. The Factory setting is 400. Press the **CHARGE** button to change the settings.

## 12 VOLT DISTRIBUTION PANEL -FRONT
*Ford Chassis*

The chassis fuse boxes are placed in two locations. One panel is located inside the motorhome under the dash panel. The box located under the dash is referred to as the **Central Junction Box.**

The other panel is located outside, mounted on the front firewall. This box is referred to as the **Power Distribution** or the **Battery Junction Box.**

### Central Junction Box:

| Fuse Position | AMPS | Circuits Protected |
|---|---|---|
| 1 | 20 | Right Turn Signal Relay Coil, Left Turn Signal Relay Coil, Right Turn Indicator, Body Builder Right Rear Turn/Stop Feed, Body Builder Turn/Stop Feed. |
| 2 | | NOT USED |
| 3 | | NOT USED |
| 4 | 15 | Interior Lamp Relay |
| 5 | 10 | Accessory Feed #1 |
| 6 | 10 | Trailer LH Turn/Stop Lamp |
| 7 | 15 | Blower Motor Relay |
| 8 | | NOT USED |
| 9 | 20 | Trailer Tow Electrical Brake Controller Feed, Body Builder Right Rear Turn/Stop Feed, Body Builder Feft Rear Turn Stop Feed, Body Builder Stoplamp Feed |
| 10 | 5 | Instrument Cluster, Hydromax Lamp |
| 11 | 30 | Windshield Wiper/Washer Module, Wiper Feed |
| 12 | 10 | Trailer Tow Right Stop/Turn Feed |
| 13 | 10 | 4 WABS Module |
| 14 | 10 | Instrument Cluster, Hydro-Max Monitor, Warning Chime Module, Transmission Control Switch |
| 15 | 15 | LH Turn Relay |
| 16 | 20 | Body Builder Battery Feed |
| 17 | 5 | Body Builder Radio Feed |
| 18 | | NOT USED |
| 19 | 5 | DRL On-Off Relay |
| 20 | | NOT USED |
| 21 | 15 | RH Turn Relay |

| Fuse Position | AMPS | Circuits Protected |
|---|---|---|
| 22 | | NOT USED |
| 23 | | NOT USED |
| 24 | | NOT USED |
| 25 | 10 | Body Builder Right Headlamp (Low Beam) |
| 26 | 10 | Shift Lock Acutator, Speed Control Servc |
| 27 | | NOT USED |
| 28 | | NOT USED |
| 29 | | NOT USED |
| 30 | | NOT USED |
| 31 | 10 | Body Builder Left Headlamp (Low Beam) |
| 32 | 10 | Digital Transmission Range (DTR) Sensor (Reversing Lamp Feed) |
| 33 | | NOT USED |
| 34 | | NOT USED |
| 35 | 20 | Headlamp High Beam, High Beam Indicator |
| 36 | | NOT USED |
| 37 | | NOT USED |
| 38 | 10 | Body Builder Accessory Feed #2 (Run) |
| 39 | | NOT USED |
| 40 | | NOT USED |
| 41 | 10 | Headlamp Switch, Dimmable Light, Body Builder Feed, Instrument Cluster Illumination |
| 42 | | NOT USED |
| 43 | | NOT USED |
| 44 | | NOT USED |

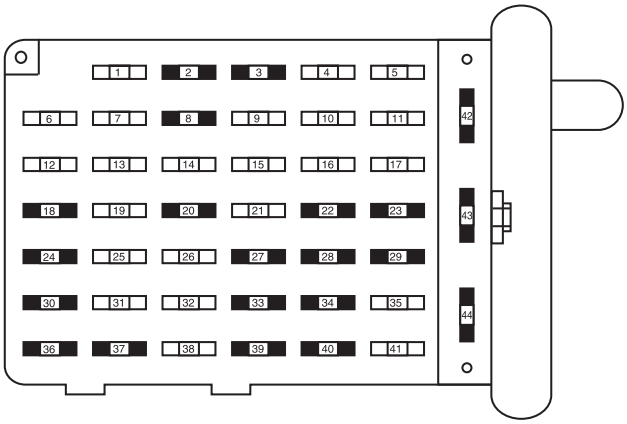


OM080224.eps

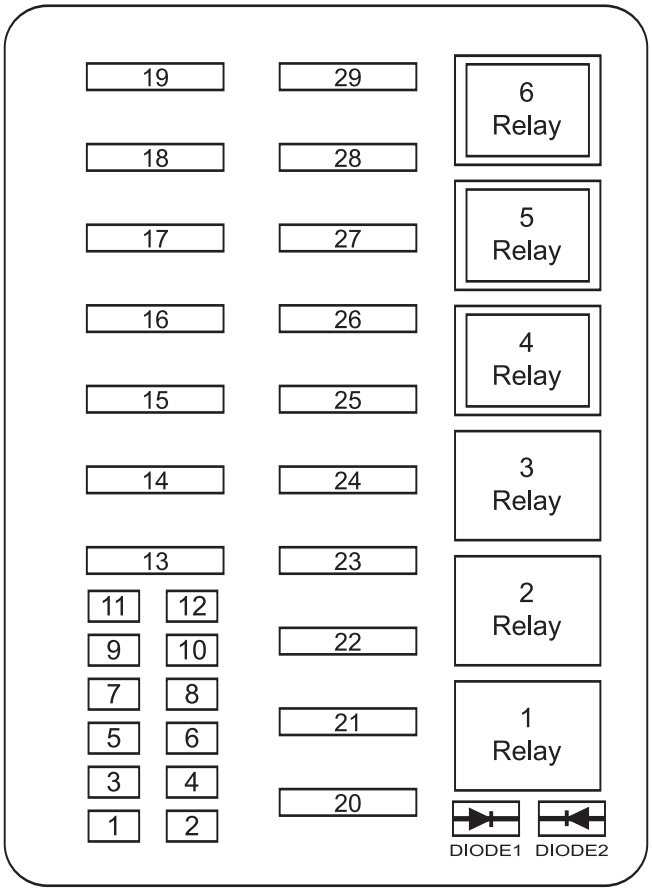


080225b

| # | Circuit | Fuse |
|---|---|---|
| 1 | Power Brake Assist Module | 5* |
| 2 | A/C System | 10* |
| 3 | 4R100 Transmission, Vapor Management Valve Solenoid, Heated Exhasut Gas Oxygen (HEGO) Sensors | 20* |
| 4 | Powertrain Control Module Memory | 5* |
| 5 | Powertrain Control Module Power Fuel Pump Relay Coil, Fuel Injectors, Mass Air Flow Sensor with IAT, A/C System Relay Coil | 15* |
| 6 | Parklamp Feeds, Instument PanelFuse #41, Warning Chime Module, Trailer Tow Running Lamp Relay Coil, 1/P Dimmer Module | 20* |
| 7 | Starter Relay Coil, BB Neutral Sense | 15* |
| 8 | Stoplamp Switch (Logic): Brake Pressure Switch, Power Brake Assist Module***, Speed Control Module, Powertrain Control Module, ABS Module, Brake Shift Interlock Actuator | 10* |
| 9 | Alternator | 5* |
| 10 | Daytime Running (DRL) Lamps | 20* |
| 11 | Ignition Coils, Radio Capacitors #1 and #2, Powertrain Control Module Relay | 30* |
| 12 | Trailer Tow Running Lamps Feed, Trailer Tow Backup Lamps Feed, IP-Backup Lamp Feed | 20* |
| 13 | Trailer Tow Electrical Brake Controller Feed | 30** |
| 14 | Instrument Panel Battery Feed (Fuse #9,15,21) | 60** |
| 15 | Not Used | |
| 16 | ABS Module | 60** |
| 17 | Not Used | |
| 18 | Horn Feed | 20** |
| 19 | Not Used | |

| # | Circuit | Fuse |
|---|---|---|
| 20 | Powertrain Control Module Relay | 40** |
| 21 | Fuel Pump Motor | 20** |
| 22 | Diagnostic Tool Connector, Cigar Lighter Feed | 20** |
| 23 | Blower Motor Feed | 40** |
| 24 | Instrument Panel Battery Feed (Fuses #4, 10,16) | 40** |
| 25 | Ingnition Switch Feed (Instrument Panel Fuses # 1, 5, 7, 11, 13, 14, 17, 19, PBD Fuses # 7,9,11) | 50** |
| 26 | Ignition Switch Feed (Instrument Panel Fuses #5, 11, 17, 26, 32, 38) | 60** |
| 27 | Multifunction Switch (Headlamps) | 30** |
| 28 | Not Used | |
| 29 | Power Brake Assist Motor*** | 60** |
| Relay 1 | Daytime Running Lamps ON/OFF Relay | |
| Relay 2 | Fuel Pump Relay | |
| Relay 3 | Horn Relay | |
| Relay 4 | A/C System Relay | |
| Relay 5 | Blower Motor Relay | |
| Relay 6 | Powertrain Control Module Relay | |
| Diode 1 | Powertrain Control Module Diode | |
| Diode 2 | Park Brake Diode | |

** Mini Fuses ** Maxi Fuses *** Vehicle with Hydromax Brake Assist Only*

| HIGH CURRENT FUSE VALUE AMPS | COLOR CODE |
|---|---|
| 20A PLUG-IN | YELLOW |
| 30A PLUG-IN | GREEN |
| 40A PLUG-IN | ORANGE |
| 50A PLUG-IN | RED |
| 60A PLUG-IN | BLUE |

060094

# WORKHORSE FUSES & CIRCUIT BREAKERS

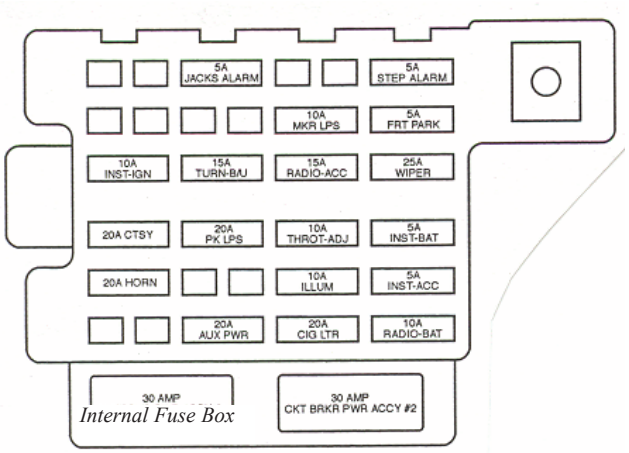


*Internal Fuse Box*

080454

| Name | Circuits Protected |
|---|---|
| HORN | Horn Relay |
| CTSY | Dome & Courtesy Lamps (Body Builder) |
| INST - IGN | DRL Relay, DRL Control Module, Cluster, Audio Alarm, Check Tire |
| AUX PWR | Body Builder |
| PK LPS | Headlamp Switch (Park, Marker and Tail Lamps) |
| TURN - B/U | Turn Signal Switch, Park/Neutral Position & B/U Lamps |
| JACKS ALARM | Jacks Alarm |
| CIG LTR | Cigarette Lighter (Body Builder) |
| ILLUM | Instrument Panel Cluster, Audio Alarm, Body Builder Feed |
| RADIO -ACC | Body Builder Radio |
| MKR LPS | License Lamps, Body Builder Marker Lamps |
| RADIO - BAT | Body Builder Radio |
| WIPER | Body Builder Wipers |
| FRT PARK | Front Park Lamps |
| STEP ALARM | Step Alarm |
| PWR ACCY #1 | Body Builder |
| PWR ACCY #2 | Body Builder |
| INST - BAT | Cluster - Check Tire |
| INST - ACC | Cluster |
| THROT - ADJ | Throttle Adjust |

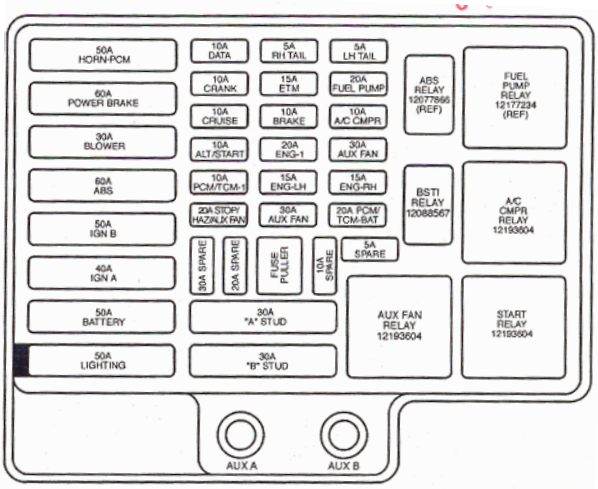


*External Fuse Box*

080455

| Name | Circuits Protected |
|---|---|
| PCM/TCM - BAT | Powertrain Control Module, Transmission Control Module |
| AUX FAN | Auxiliary Fan |
| STOP/HAZ | ABS Brake Switch, Turn Signal Switch, Audio Alarm/Auxiliary Fan |
| ENG - RH | Cylinder 2,4,6,8 Injectors and Coils |
| ENG - LH | Cylinder 1,3,5,7 Injectors and Coils |
| PCM/TCM - 1 | Powertrain Control Module, Transmission Control Module |
| AUX FAN | Auxiliary Fan |
| ENG - 1 | EVAP Canister Sol, Mass Air Oxygen Sensors |
| ALT/START | Alternator, Park/Neutral Position & B/U Lamps |
| A/C CMPR | A/C Compressor Relay |
| BRAKE | ABS Module, ABS Brake Switch |
| CRUISE | Cruise Control Switch |
| FUEL PMP | Fuel Pump Relay |
| ETM | Electronic Throttle Module |
| CRANK | Crank Request to PCM |
| LH TAIL | LH Tail Lamps |
| RH TAIL | RH Tail Lamps |
| DATA | Data Link |
| "B" STUD | Body Builder |
| "A" STUD | Body Builder |
| LIGHTING | I/P External Fuseblock, Headlamp Switch, Data Link Fuse (Eng) |
| BATTERY | I/P External Fuseblock, Stop/Hazard Fuse (Eng) |
| IGN A | Ignition Switch Starter Relay |
| IGN B | Ignition Switch |
| ABS | ABS Module |
| BLOWER | HVAC Blower |
| PWR BRK | Power Brake |
| HORN - PCM | Eng Fuse Block, Horn Fuse (I/P External) |

Breaker current ratings are current set points in which the breaker is designed to operate. The internal configuration of the circuit breaker is designed to trip when excess current is drawn through the breaker. The breaker will heat up from the excess current causing the breaker to trip. The trip action of the circuit breaker can occur within milliseconds due to the speed at which electricity can travel. Breaker ratings are set to operate on a continuous load at 80% of the breaker's rated capacity. For example: A breaker with a 20 Amp rating will handle a continuous load of 16 Amps. This designed set point is when an inductive load is applied, such as when an electric motor turns on. As the motor starts to spin current consumption may momentarily exceed the rated capacity of the breaker. As the electric motor comes up to operating speed the electric motor's current consumption will fall. The AC current load then falls back into the breaker's rated 80% set point. This electric principle should be kept in mind when using anything other than 50 Amp shore service and using appliances with electric motors. When using outlets care should be considered when applying loads such as electric motors, heaters, coffee makers, toasters, hair dryer or other large current consuming loads. If the current rating of a load is not known it is usually stated on most electrical items. The rating will either be in amps or watts. Current ratings stated on electrical items will change slightly with voltage fluctuations. As voltage increases current consumption decreases. As voltage decreases current consumption increases. This may explain why in some instances items operated at borderline voltage to current tolerances may seem fine in one location but problematic in another.

**NOTE: To calculate watts to amps simply divide the watt figure by the voltage of which the item operates from. For example: The electrical item is rated at 1370 watts. Divide that by the operating voltage of 115 Volts which equals 11.913 Amps. Use this formula to calculate load to current supply ratio.**

## Tools of the Trade

One of the most widely used tools used for testing a 12 Volt problem is the test light. Test lights come in a host of varieties such as a light bulb with a probe and ground clip to the more elaborate electronic ones that measure a wide scale of voltages and perform a variety of functions. A VOM or Volt Ohm Meter is used to perform a multitude of tests when exact values are needed for evaluation. These meters come in an analog or digital format. Either of these two testing tools may be used, depending upon personal preference. If a 12 Volt light is not working the test light may be better suited for this. In the case of a charging system problem the meter may be the tool of choice. In any situation the testing tool is an invaluable piece of equipment when it comes to determining an electrical problem.

## Knowing When to Say No

Should it become necessary to use testing tools take certain precautions and consider three things. First, recognize when the problem is beyond your skill level. Nothing will create more mayhem than being armed with tools and going in an unknown direction. Good intentions have led to major problems. The second item to keep in mind is if something will cause more grief by being dealt with now than if it were left alone and repaired by a professional at a more convenient time. How many times have you said to yourself, “This will only take a few minutes,” only to find it is taking an entire day and you wished you had not touched it? The third item to consider is whether or not the current situation may be potentially dangerous if left to be repaired at a more convenient time?

**NOTE: Check all related fuses before assuming you have encountered an electrical problem or situation. Spare fuses should be kept on hand, and can be purchased from most auto parts stores. A fuse description label is on the distribution panel cover.**

**WARNING: If a fuse blows replace the fuse with the same amperage rating and type. Installing higher amperage fuses can damage the wiring or the item the fuse is protecting, or may cause a fire. If the fuse repeatedly blows after replacing it do not continue to replace it. Have the problem diagnosed and corrected by a qualified technician.**

## BATTERY - HOW IT WORKS

Batteries come in different sizes, types, amp hours, voltages and chemistries. There are nearly as many descriptions of battery types and how they should be used as there are people willing to offer advice on them. Although it is not possible to cover batteries in their entirety, there are guidelines that can be followed to ensure that the batteries are well maintained.

The operation of the battery is based on a chemical reaction. The battery is a container of lead plates, insulators and a solution of distilled water and sulfuric acid. The solution, when mixed together, is known as "electrolyte."

The 12 Volt battery is actually six batteries in one case. When charged, each cell has a voltage of 2.1 Volts. When six cells are hooked together this makes a 12.6 Volt battery (fully charged).

Electrons are stored on the negative plates. When a load (eg. a light bulb) is put between the positive and negative terminals, the electrons move from the negative plate to the positive plate through the "load" and then back to the ground terminal. At this time the sulfuric acid leaves the water and adheres onto the plates of the battery. The electrolyte solution keeps the electrons from flowing while the battery is in the "at rest" position.

Charging the battery moves the sulfuric acid back into solution with the distilled water. A battery left in a low or discharged state will cause the acid to "sulfate." In attempting to recharge the battery, the acid has become hardened and no longer will leave the plates and enter into the liquid solution with the distilled water. The lowered acid to water ratio has a direct affect on the battery's ability to release the stored electrons (power output) and the length of time it can perform (reserve capacity). Batteries left in a discharged condition will readily freeze. This can crack the case allowing the solution to spill, it can also warp the plates. The acid acts like an "antifreeze" for the battery. This is why batteries should not be left or stored in a "discharged" condition.

## *Battery Types*

**Starting Batteries:**

Starting batteries are designed for high output cranking power, but not for deep cycling like the house batteries are designed to do. Starting batteries will not last long in deep cycle application. The way they are rated should give a good indication of their intended use. "Cold Cranking Ampere" is a measurement of amperage output that can be sustained for 30 seconds. Starting batteries use thin plates to maximize the surface area of the battery. This allows a very high starting current but lets the plates warp when the battery is deep cycled (discharged).

**Deep Cycle Batteries:**

Deep cycle batteries are best suited for use with 12 Volt operated lights, appliances and inverters. These are available in many sizes and types. The most common is a non-sealed, liquid electrolyte battery. The non-sealed types have battery caps. The caps should be removed periodically to check the level of electrolyte. When a cell is low, only distilled water should be added. Water consumption will vary depending on many factors: how far the batteries are depleted, how long the voltage is being applied to charge the batteries, how much voltage is used and how often this occurs. Generally, the batteries should be checked every two or three weeks when continuously hooked to shore power.

**NOTE: Tap water contains minerals which can alter battery chemistry and ruin the battery. Use only distilled water when refilling the battery.**

**NOTE: Batteries should not be drained past 50% of their capacity often, the life of the batteries may be shortened.**

## *Battery Maintenance*

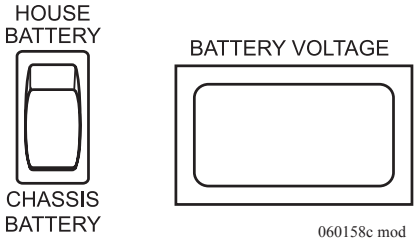


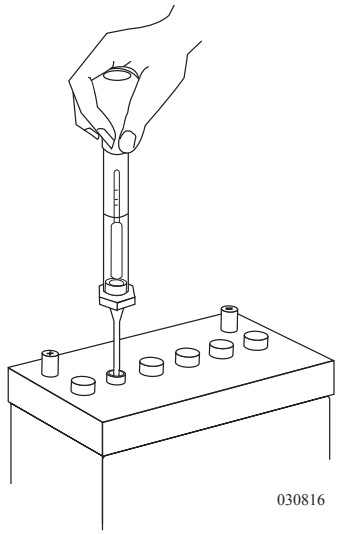


There are several ways that a battery can be tested and monitored. The motorhome uses a monitor panel that shows the status of the batteries at a quick glance. Press and hold the test switch to display the desired battery bank voltage.

A more efficient way of testing the batteries is to check the electrolyte solution. The only way to test a battery's electrolyte solution is with a hydrometer. Hydrometers can be purchased from most auto parts stores.

Many styles are available, from types with cylinder graduation (shown here) to types with floating balls. The hydrometer tests the battery's electrolyte solution which is measured in specific gravity. Distilled water has a specific assigned gravity of 1,000. The hydrometer is calibrated to this mark. Pure sulfuric acid has a specific gravity reading of 1,840. The acid is 1.84 times heavier than water. The electrolyte solution is about 64% water to 36% acid (fully charged battery). Hydrometers with cylinder graduation are graphed and the exact state of specific gravity can be determined.

Temperature and recent battery activity (charging or discharging) affect the hydrometer readings. It is best to check the battery when it has been "at rest" for at least three hours, although readings taken at other times will give a "ballpark" figure. When using the hydrometer, draw the electrolyte solution up into the tube. Allow the hydrometer to attain the same temperature as the electrolyte solution. Note the reading for that cell. Complete the same test for the rest of the cells on that battery bank.

The hydrometer is calibrated at 80° F. Temperature affects the hydrometer readings. The higher the electrolyte temperature, the higher the specific gravity reading. The lower the temperature, the lower the specific gravity reading. Add or subtract four points for each 10° variance from the 80° F chart. Readings between cells should not vary more than 50 points.

If one cell in a particular battery bank being tested is at a 50% state of charge while the others are indicating a full charge, charge only that battery to see if the low cell will come up. At the same time, do not over charge the "healthy" cells.

If the low cell does not come up after charging, this battery can damage the rest of the battery bank and should be replaced. An accurate digital volt meter + - .5% will also give an indicator of the battery's state of charge.

Another test that can be performed is to place a specific load on the battery for a predetermined length of time equal to that particular battery's rating. This machine is usually an adjustable carbon pile that can vary the load being applied to the battery(s) while monitoring voltage to see if they will perform to their specific rated capacities.

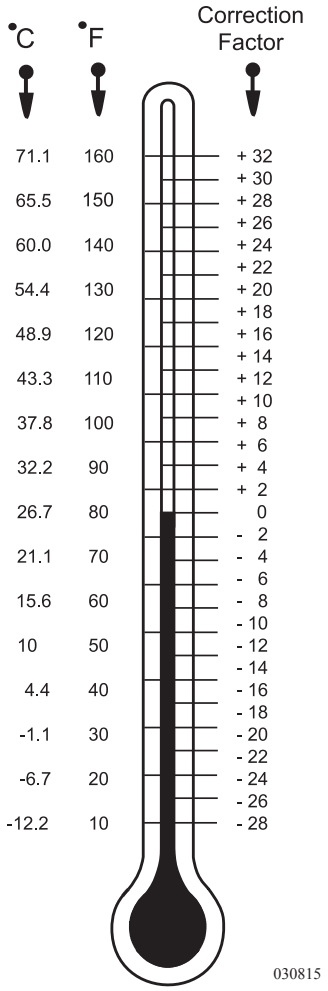


*Temperature Compensation Chart*

**NOTE: See the Temperature Compensation Chart. Liquid levels should be even between the cells of the battery being tested as it will affect the accuracy of the test.**

**WARNING: Sulfuric acid in the batteries can cause severe injury or death. Sulfuric acid can cause permanent damage to eyes, burn skin and eat holes in clothing. Always wear splash-proof safety goggles when working around the battery. If the battery electrolyte is splashed in the eyes, or on skin, immediately flush the affected area for 15 minutes with large quantities of clean water. In case of eye contact, seek immediate medical aid. Never add acid to a battery once the battery has been placed in service. Doing so may result in hazardous splattering of electrolyte.**

## *Battery Maintenance*

*Wear safety glasses when servicing the battery.*

At a minimum, the battery electrolyte level should be checked at least once a month. Check the level sooner if the battery is frequently used. The level should be above the top of the plates, but not overfull. Most batteries have a plastic cup or well. The electrolyte level should be approximately 3/8” below the well to allow room for expansion while the battery is being charged. Over-filling the battery will allow the electrolyte solution to boil or gas out of the battery cap. Remember to use only distilled water to refill the battery. A battery with a low electrolyte level will boil the water out rapidly once the plates have been exposed to air. This process may take only a matter of hours. If this has happened the battery is more than likely damaged.

After checking the battery’s electrolyte levels it is also a good idea to check the battery connections for tightness and corrosion. If any corrosion is found disconnect the cables (make sure to mark their locations) and carefully clean them with a mild solution of baking soda and water. There are also aerosol products available that will work. This will neutralize any acid that may be present. Do not allow the solution to enter the battery as this will damage the electrolyte balance. Use water to rinse the top of the battery and surrounding area when done. Carefully hook the cables back to the battery. Coat the terminals with petroleum jelly or an anti-corrosion grease.

The battery cable to battery terminal connections should be metal to metal. Periodically check the batteries for corrosion. Look for cracks and check the vent plugs. Replace them if they are cracked or missing. Keep the top of the batteries clean. The accumulation of electrolyte and dirt may permit small amounts of current to flow between the terminals, which can drain the battery.

**WARNING: Liquid lead acid batteries produce highly explosive hydrogen gas when charging. Do not smoke around batteries. Extinguish all flames in the area. The hydrogen gas may explode resulting in fire, personal injury, property damage or death.**

**1. Physical Condition:**

Active material flakes off the plates and fall to the bottom of the cell. This is normal, but sediment accumulates under the plates and can short out a cell. The plate separators fail to insulate positive and negative plates in a cell and the cell becomes shorted, ruining the battery.

**2. Insufficient Electrolyte:**

This allows exposed portions of the plates to sulfate rapidly. This reduces the battery's ability to accept a charge and the battery capacity is reduced. Accelerated erosion of the lower portions of the plates occur from higher than normal acid content due to water loss. Only the water evaporates, not the acid. The battery also has a higher internal resistance when low on water. Add only distilled water. Fill each cell to the bottom of the vent well when the battery is warm. Filling a very cold battery with water to the bottom of the vent well will cause overspill when the battery warms up and the plates expand. A Battery Formula For Failure: The battery has a higher internal resistance when low on water, therefore: *high resistance = more heat = shorter battery life!*

**3. Sulfation:**

When a battery is allowed to remain discharged too long the accumulated lead sulfate in the plate material solidifies and cannot reenter the electrolyte. Sulfate in plates is not able to reconstitute the electrolyte to a higher specific gravity, or to restore the plate material to a more active composition.

**4. Overheating:**

A battery operated, when the electrolyte temperature reaches 125º F, increases the chemical reaction. This increases the corrosion of the plates and reduces the battery life. When overheated the battery plates tend to buckle and destroy the structural integrity of the battery.

**5. Freezing:**

When the electrolyte freezes, ice formed dislodges the active material from the plates. The battery case may crack and the electrolyte will leak out when thawed. It is especially important to keep a battery at full charge in cold weather to prevent freezing. The high specific gravity of a fully charged battery does not freeze as easily. Never attempt to recharge a frozen battery. Warm it up first.

**6. Corrosion:**

Corrosion from spilled or splashed electrolyte form deposits that can conduct electricity and cause battery drain. Clean off all corrosion, especially around the battery terminals and on the top cover of the battery. Prevent accumulation by coating the terminals and the exposed metal cable connectors with high temperature grease.

**7. Overcharging:**

Overcharging rapidly converts water to gas and decreases the electrolyte's water content as the water evaporates. The electrolyte level drops and becomes more acid in content. This subjects the plates to a higher concentration of sulfuric acid and results in early battery failure.

**NOTE: Any time you add more than one or two ounces per-cell per-thousand miles driven, check the motorhome charging system for overcharging. Prolonged overcharging generates excessive heat inside the battery which buckles the plates and destroys the battery. It is a fact that over 50% of battery failures are caused by overcharging.**

## *Battery Voltage & Current*

Why does the voltage on a discharged battery measure the same as a fully charged battery until the loads are applied? The simple answer to this might go as follows: A battery creates electrical power by converting energy from a chemical reaction into electrical energy. As this reaction slows down the battery voltage will drop. In a lead acid battery the electrolyte conductivity (how well electrical current can flow through it) changes. The same current may be available but the rate of the reaction decreases, causing a voltage drop.

Another way of looking at this is to use the analogy of a water pump (a battery is an electric pump). The pressure in psi (pounds per square inch) that a pump delivers is like a battery's voltage. The volume of water in GPM (gallons per minute) is like the electrical current. Let's look at a 12 psi pump with no loads (the pump is running but the outflow valve is turned off). The pump will run and the internal pressure of the pump will build up to some point higher than 12 psi. Once the valve is opened and the water is free to flow into the loads the pressure will drop to the rated output pressure of 12 psi, but only if the load is not too big. If the pump is designed to maintain 12 psi at 15 GPM, and a load demanding 20 GPM is connected, the pump will not be able to keep up and the pressure will get sucked down to a lower psi.

If the load is then reduced or removed the pump will catch up and return to its rated 12 psi pressure. If the pump has an infinite source of water, such as a lake or the water utility (this is like the grid, no battery), the pump will never run out of pressure. If the pump never runs out of pressure and is

operated at or below its 15 GPM level, it will hold 12 psi. However, a pump that is connected to a water tank with a finite capacity will start to lose the ability to hold pressure as the level of water in the tank drops. Think of siphoning water from a bucket. As the level of the water drops the volume of water exiting the siphon slows down.

When the tank is full it is capable of feeding more "pressure" to the pump inlet due to gravity, and the pump always has enough water available to maintain its rated pressure and volume. However, if the water tank gets low the pump will not have enough water volume coming in to maintain 12 psi at 15 GPM. If the loads are taken away from the pump by closing the valve on the outflow, even with low pressure in the tank the pump will eventually pump up to 12 psi. It will just take it longer to get there. When the valve is opened the pump will sustain 12 psi for a brief period, but since the tank is no longer feeding the pump as fast as needed the pressure will eventually drop. This analogy can be restated by replacing the pump with a battery, pressure with voltage, volume with amps, outflow valve with a switch, water with electricity and the water tank with the battery electrolyte.

The level of the tank could be thought of as the rate of the reaction taking place in the electrolyte. When the battery is fully charged the electrolyte has an excess of reactions taking place to feed the battery terminals. This tapers off with time as the electrolyte is spent so maintaining voltage becomes possible. With no loads the spent electrolyte will be capable of producing close to the rated voltage, but only after a period of time has elapsed for enough reactions to take place to bring the voltage back up. Hopefully, this scenario will help make clear why a battery measured at rest can show close to its rated voltage but will not run a load.

## Battery Charge Time & Consumption Rate

**Calculating Run Times:**

Calculating run time figures when operating 120 Volt AC electrical items with an inverter can be expediential. This is due to battery characteristics. Flow characteristics of electrons vary with different battery types and chemical compositions. Deep cycle batteries are generally designed to slowly release a majority of their charge capacity. Deep cycle batteries are rated in amp hours (Ahr) with the discharge occurring over an extended period of time before the battery is charged. Engine starting batteries are designed to quickly release large amounts of current for short durations without depleting battery reserves. Commercial type batteries bridge the gap of deep cycle and engine batteries. Commercial batteries release medium amounts of current over a longer period of time, but they are not designed to cycle their charge capacity.

The working range of a deep cycle battery is between 50 and 100% state of charge (SOC). Deep cycle batteries should not be cycled below 50% state of charge. Discharging a deep cycle battery below 50% state of charge shortens the life of the battery. Deep cycle batteries use an amp hour rating which is usually calculated over a 20 hour discharge interval. Example: A deep cycle battery with a rated capacity of 100 Ahr is designed to release current at the rate of five amps per hour. Multiply a 5 amp load over a 20 hour discharge period equals the rated 100 Ahr capacity. These discharge figures are calculated with the battery starting at 100% state of charge with the battery at 80º F when the discharge cycle begins. Increasing the discharge load applied to the battery from five amps to ten amps on a 100 Ahr battery does not yield 10 hours of discharge time. This is due to the internal reactions which occur when a battery is discharging. Actual discharge time for a 10 amp load may be closer to eight hours of discharge time. Increasing the load applied to the battery to 20 amps will not yield five hours discharge time but may be less than three hours. It might be understood as a point of diminishing return.

Calculating applied loads to an inverter to approximate run time from the battery amp hours available is not an equal trade up when voltage is inverted and amperage is calculated. When the inverter is used to operate an AC load, it uses approximately ten times the DC current needed from the battery when inverting 12 Volts to operate the 120 Volt item. Also, a small inverter loses approximately 10% of its efficiency when inverting. For example: When using the inverter to operate an AC electrical item, which has a current draw rating of 2 amps, the inverter will use over 20 amps DC power from the batteries.

**Determining Current Consumption:**

First determine the amount of current used by an AC item. For example: The television is rated at 200 watts at 120 Volts. Calculate watts to amps. Divide 200 watts by the operating voltage of 120. This equals 1.6 amps. Multiply 1.6 amps AC current by a factor of ten the inverter will use. This equals 16 amps DC battery current. Add the revised 10% efficiency loss figure. This calculates to a total of 17.6 amps DC. If the battery bank capacity is rated at 500 Ahrs, actual elapsed time to the suggested 50% state of charge would net viewing time for the television at approximately 13 hours in ideal conditions.

The run time figure will vary greatly with the actual state of charge of the battery bank when the discharge process begins. Ambient temperature, combined with other working loads such as lights and parasitic loads applied to batteries, affect run times. Calculating the exact run time is not precise due to all the variables and equations involved; however, an approximate time figure can be obtained. Proper battery maintenance and charge cycles affect battery performance. Observe the battery condition with hydrometer and voltage readings. Use only distilled water when filling batteries. To achieve the highest quality of battery performance and longevity keep batteries in their proper operating range.

| CHASSIS | AH (20 HR) | CCA† | RC (25A @ 80° F) MINUTES |
|---|---|---|---|
| | | | |
| Chassis 12 Volt Chassis 31P-MHD (2 each) | | 950 | 450 |
| 6 Volt Domestic U2200 (4 each) | 450* | ** | 75 Amp @ 80° F = 230 min. |

**Total battery bank capacity.*

***Battery connections are made in a Series/Parallel connection. †CCA Ratings are at 0° F. Therse are the minimum requirments.*

| Battery State of Charge vs. Voltage / Specific Gravity | | | |
|---|---|---|---|
| Voltage | Specific Gravity | State of Charge | Depth of Charge |
| 12.66 | 1.265 | 100% | 0% |
| 12.45 | 1.225 | 75% | 25% |
| 12.25 | 1.190 | 50% | 50% |
| 12.05 | 1.145 | 25% | 75% |
| 11.90 | 1.100 | 0% | 100% |

## WORKHORSE GAUGES

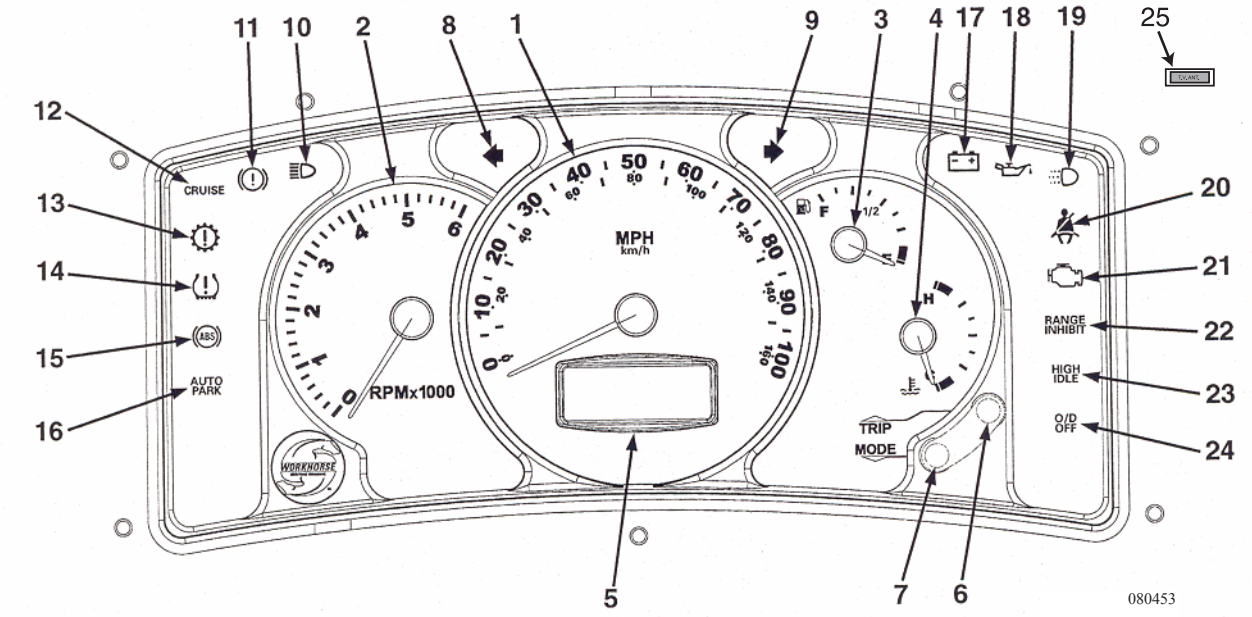


1. **Speedometer:** Indicates the speed of the motorhome. The gauge indicates MPH and KPH. Located on center of the instrument cluster.

2. **Tachometer:** Displays engine speed in revolutions per minute (RPM). Tachometer reads output pulse of alternator. If tachometer quits, or indicates improperly, have alternator checked immediately.

3. **Fuel:** Fuel gauge will register approximate fuel level in tank when ignition switch is in run position.

**NOTE: Fuel mileage varies with driving style and road conditions. Always average more than one tankful to obtain a more accurate figure. The generator will use fuel from main tank and will affect fuel mileage figures. The generator will not operate below 1/4 tank to insure there is enough fuel to run main engine.**

4. **Engine Temperature Gauge:** Normal operating temperatures should be a midrange indication.

5. **LCD Screen:**
   - Indicates transmission gear selection on vehicles equipped with an automatic transmission (if the steering column is not equipped with a gear selection indicator).
   - Odometer with a maximum mileage accumulated to 999999.9 miles / km.
   - Trip odometer 1 and 2 (independent functions).
   - Battery voltage.
   - Oil pressure or PRND321 (depends on the user selection).
   - Warning messages to provide more detail if the vehicle condition monitoring system detects a fault (this will interrupt monitoring data displayed).

6. **Trip Button:**
   - Selects and resets the trip 1 and 2 odometers.
   - Scrolls upwards in the menu display.
   - Is used with the Mode button to select menu choices and toggle between Metric and US units.
   - Displays the odometer reading when the ignition is OFF.
   - Acknowledges the sounding of the buzzer and chimes.

7. **Mode Button:**
   - Selects inquiry mode (only available if equipped with PRND321 display).
   - Scrolls downward in the menu display.
   - Is used with the Trip button to select menu choices and toggle between Metric and US units.
   - Displays the odometer reading when ignition is OFF.

8. **Turn Signal LH Turn Active:** An arrow is displayed on the instrument panel to indicate a left hand turn

9. **Turn Signal RH Turn Active:** An arrow is displayed on the instrument panel to indicate a right hand turn.

10. **Headlight High Beam on Warning Light:** Indicates when high beam is on.

11. **Brake Fail and Park Brake Warning Light:** Light should come on briefly when you turn the ignition key to RUN. If light does not come on, have it fixed to warn you if there's a problem. If the warning light stays on after you start the engine there could be a brake problem. Have brake system inspected immediately. When the ignition is on, this light will come on when you set the parking brake. The light will stay on if the parking brake is not fully released.

12. **Cruise Control Active Warning Light:** Indicates when cruise control is active.

13. **Transmission Fail Warning Light:** Indicates problem with transmission. Motorhome should be taken to an authorized dealer immediately.

14. **Tire Pressure Monitoring Telltale:** Indicates tire pressure.

15. **Anti-lock Brake System Warning Light:** Light will come on when you start your engine and may stay on for several seconds. If light stays on, or comes on when driving, motorhome should be taken to an authorized dealer immediately.

16. **Auto Park Brake Engaged Warning Light:** Light will come on as you start the motorhome and stay on when transmission is in PARK (P). The light will also stay while the system is building pressure to release the parking brake. If it doesn't come on, have it fixed so it will warn you if there's a problem.

17. **Battery Charging System Warning Light:** Light is used by the charging system to warn that the system is not charging the battery.

18. **Engine Oil Pressure Warning Light:** Indicates when oil pressure is too low.

19. **Daytime Running Lamps On Warning Light:** Indicates when the daytime running lamps are on.

20. **Seat Belt Reminder Warning Light:** Indicates when driver's seat belt is not fastened.

21. **Service Engine Warning Light:** The motorhome is equipped with a computer which monitors operation of the fuel, ignition and emission control systems. Light will come on to indicate a problem and service is required.

22. **Transmission Range Inhibit On Warning Light:** Indicates when transmission range is restricted to a lower gear.

23. **High Idle Enabled On Warning Light:** Indicates when engine is operating at high idle.

24. **Overdrive Off Warning Light:** Indicates when overdrive switch is in the OFF position.

25. **Antenna Up Warning Light:** This light illuminates when TV antenna is in raised position with ignition switch ON. Do not move motorhome until the antenna is lowered.

## FORD GAUGES

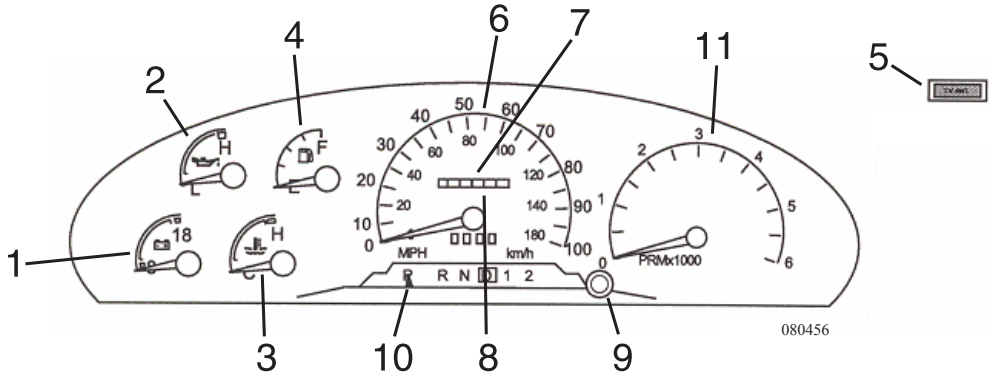


1. **Voltmeter:** Shows voltage of chassis electrical system.

2. **Oil Pressure Gauge:** Registers oil pressure of engine. A engine temperature reading in midrange area is considered average.

3. **Engine Temperature Gauge:** Normal operating temperatures should be a midrange indication.

4. **Fuel:** Fuel gauge will register approximate fuel level in tank when ignition switch is in run position.

**NOTE: Fuel mileage varies with driving style and road conditions. Always average more than one tank full to obtain a more accurate figure. The Generator will use fuel from main tank and will affect fuel mileage figures. The Generator will not operate below 1/4 tank to insure there is enough fuel to run main engine.**

5. **Antenna Up Warning Light:** This light illuminates when TV antenna is in raised position with ignition switch ON. Do not move motorhome until the antenna is lowered.

6. **Speedometer:** Indicates the speed of the motorhome. The gauge indicates MPH and KPH. Located on center of the instrument cluster.

7. **Odometer:** The odometer indicates the actual mileage of the motorhome.

8. **Trip meter:** The trip meter will display the current mileage of the trip since the last reset.

9. **Reset Button:** Used to reset the trip meter counter to zero.

10. **Shift Selector:** The indicator shows the position on the transmission.

11. **Tachometer:** Displays engine speed in revolutions per minute (RPM). Tachometer reads output pulse of alternator. If tachometer quits, or indicates improperly, have alternator checked immediately.

## SWITCHES

There are two types of switches used lighted and non-lighted. Each switch has the function it controls printed on the switch. Press the top of the switch to start the function and press the bottom to stop the function. Following is a list of switches used and their functions:

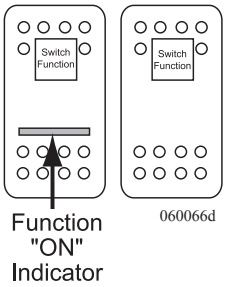


**Mirr Heat:** Turns on the heaters in outside rear view mirrors. Mirror heaters should be used when defogging or deicing is needed. Mirror heat should not be left in the ON position unless continuous fogging conditions occur. Outside mirrors have been situated for convient adjustment using an Allen wrench. After taking delivery of the new motorhome it will be necessary to sit in the driver's seat and have the mirrors adjusted for accurate visibility. Make sure you can see out of both the driver and the passenger side mirrors before heading out on the road.

**Accessory Switch:** Prewired with a hot wire and ground wire for additional accessories which may be added in the future.

**Battery Boost:** Battery Boost is used in the event the motorhome chassis battery has been drained or is at a low charge level to prevent the engine from starting. This switch momentarily "jumps" the house battery to the motorhome domestic battery to assist in starting the engine. The boost switch used in conjunction with engine starting procedures should not be held for more than 30 seconds. This time period is long enough to prevent the boost solenoid from overheating.

**Overdrive Lock-out (Workhorse Chassis ONLY):** Used for towing or direct drive transmission operation. Push the switch to lock-out overdrive for mountain driving. Push the switch again to return to overdrive operation.

**Gen ON/OFF:** Starts and stops generator from the dash area.

**Radio Power Switch:** Turns radio on and off independent of main switch on radio.

**Radio:** Complete instructions for operation of radio are in the Owner's Information Packet.

**Air Horn:** Sounds air horn when switch is pushed.

**LH Shade:** Operates the power sunvisor located on driver side.

**RH Shade:** Operates the power sunvisor located on passenger side.

**Fog Lights:** Turns fog lights ON and OFF for better visibility. The fog lights will operate with Low Beam of the headlights.

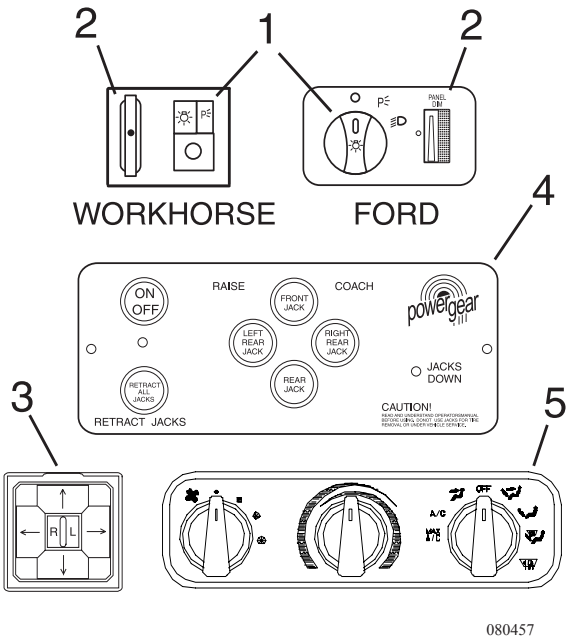


1. **Headlight Switch:** Turns the headlights on and off.

2. **Panel Light Switch:** Dims the dash panel backlighting.

3. **Mirror Control:** This switch adjusts the bottom mirror of the rearview mirror. The small selector in the middle of the switch must be placed in the desired side. The middle position is to prevent accidental bumping of the switch and changing the mirror position.

**Mirror Care and Cleaning:**
After washing the motorhome, clean the outside mirrors with a good quality glass cleaner. DO NOT use anything abrasive on the mirror or the outside chrome of the mirror.

4. **Leveling Controls:** The hydraulic leveling system is designed as a leveling system only. The leveling system should not be used to support the motorhome while under coach or for changing tires. A tire change should be performed by trained personnel with proper tools and equipment. Attempts to change tires using the leveling jack to support the motorhome could result in damage to the motorhome and risk causing serious personal injury.

5. **Dash AC and Heater Control:** The system is designed to only provide heating, cooling and defrost capabilities for the pilot/co-pilot area. The system is not capable of heating or cooling the entire motorhome.

**Blower Operation:**
The blower is selected automatically when the desired feature is selected with the "select switch." The system is shut off by placing the mode control switch in the "OFF" position.

**A/C Operation:**
The A/C dash system will operate in all modes except VENT, FLOOR and OFF. The A/C and MAX positions engage the A/C compressor. When the switch is positioned in the A/C mode, fresh air is drawn through the front air intake of the unit through the A/C coil. In the MAX position a damper door closes off the fresh air while another door opens to permit only air from inside the coach to be used. When maximum cold air is desired this position should be selected. Also use this position when you do not wish to introduce outside air into the coach.

**Air Distribution Switch (Mode Control):**
This switch is used to direct air where it is needed to maximize the comfort of the motorhome.

**MAX A/C** - Recirculated air is drawn from the passenger area and discharged through the dash louvers.The AC compressor operates in this function control setting.

**A/C -** Fresh Air is drawn from outside into the system and discharged through the dash louvers. The AC compressor operates in this control setting.

**VENT -** Fresh air is drawn in and discharged throughout the dash and defrost louvers. The AC compressor **DOES NOT** operate in this control setting.

**OFF -** The blower motor does not operate. The fresh air inlet door will close minimizing outside air infiltration into the motorhome.

**BI-LEVEL -** Fresh air is drawn in and discharged through the dash, floor and defrost louvers. The AC compressor will engage in this mode.

**FLOOR -** Fresh air is drawn in and discharged through the floor louvers. A small amount of air is used to defrost the windshield.

**MIX -** Fresh air is drawn in and discharged through the floor and defrost louvers. The A/C system operates to dehumidify the discharged air. The A/C compressor operates in this control setting.

**DEFROST -** Fresh air is drawn in and discharged through the defrost louvers. The A/C system operates to dehumidify the discharged air.

**Temperature Control Switch:**
This switch controls an electric water valve regulating the amount of engine coolant passing through the heating and cooling coils in the system. Rotating to the red area provides warmer air; rotating to the blue area provides cooler air.

**Blower Control Switch:**
The switch controls the speed of the blower motor, which is one of the best and most effective ways of controlling the temperature. The switch provides four speeds in all modes except OFF.

**Operating tips and hints:**

Air intake and discharge temperatures are greatly affected by ambient temperature and relative humidity. A large amount of cooling capacity is used to dehumidify air as well as cool it. After three to five minutes of A/C operations the discharged air temperature should be approximately 30º F cooler than the fresh or recirculated air entering the A/C system.

**Winter Use:**

- De-ice the windshield using the **DEFROST** mode.
- Air will heat up faster with a slower blower speed until normal operating temperature ranges are reached.

**Summer Use:**

- Close all windows and vents to hot, humid outside air.
- **MAX A/C** and **HI** blower will provide quick cool down.
- Use a lower blower speed to produce cooler air.

**Troubleshooting:**

The dash A/C/Heat system uses a combination of compressed air (developed by the chassis system), vacuum air (developed by the vacuum generator) and electric relays and vacuum switches. Therefore, any repair can be classified in one of five categories:

- Electrical • Vacuum • Air Conditioner • Heater • Defroster

The motorhome compressed air tank must have adequate pressure to operate the vacuum generator or damper doors will not function. Also, the dash **A/C/Heat** unit must be switched **ON** to provide electric current to the relays, vacuum switches, etc. The dash A/C and heater system should be used monthly to keep the compressor lubricated. The following information is provided to assist in troubleshooting common operational problems which may occur.

**No Heating:**

- A/C switch is turned off.
- Blower switch is turned off.
- Verify the proper engine coolant level.
- Verify that the engine is reaching operating temperature.
- Verify engine coolant is reaching water valve attached to unit.
- Verify operation of water valve to permit engine coolant to pass through valve to heater core.
- Check unit fuses.
- Check power supply to water valve and grounding.
- Check wiring.
- Engine thermostat faulty.

**No Cooling:**
- Check blower is operating, A/C switch is in A/C or Max position, temperature control is turned to max cooling (blue area).
- System fuses are not blown.
- Condenser fan is operating.
- Check power supply to unit and grounding of system.
- Check wiring.
- Coolant valve leaking.
- Drive belt loose or broken.
- Compressor Clutch inoperative, will not engage.
- Expansion Valve faulty or frozen.
- Thermostat control faulty.
- Mode control switch faulty.
- Compressor faulty.
- Loss of refrigerant.

**Reduced cooling:**
- Coolant valve not operating correctly.
- Air passages obstructed.
- Loose or worn drive belt.
- Check blower and select switch.
- Thermostat control valve faulty.
- Expansion valve faulty.
- Compressor faulty.
- Low refrigerant charge.

**Blower Does Not Operate or Runs Slow:**
- Check fuses.
- Check for loose or corroded connection.
- Check wiring.
- Check ignition switch is “ON.”
- Check blower and select switch.
- Motor shaft seized.
- Blower wheel out of alignment.

**Damper Doors Do Not Operate:**
- Does motorhome air tank have pressure?
- Check vacuum generator is being powered and producing vacuum.
- Check vacuum line entering unit for vacuum.
- Check that the vacuum solenoid mounted on unit is receiving power from the mode switch. If operating properly, the vacuum solenoid will feel hot if current is engaging the solenoid.
- Check mode switch.
- Check wiring.
- Check for pinched vacuum line leading to the vacuum motor operating the damper door in question.

## CENTER CONSOLE PANEL

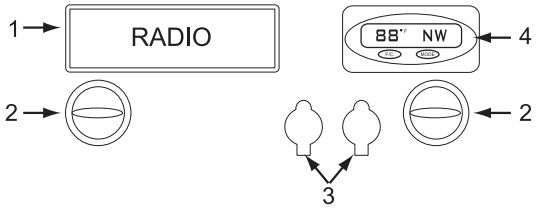


080344d

1. **Radio:** Complete instructions for operation of the radio are in the Owner's Information Packet.
2. **Air Conditioner Vent:** Louvers in vent will direct air flow either right, left, up or down.
3. **Cigarette Lighter/Auxiliary Power:** Can be used as a power source for cellular phones.
4. **Temperature and Compass:** Indicates outside ambient temperature and direction of motorhome.

## STEERING WHEEL (FORD CHASSIS)

### *Cruise Controls*

The cruise control has a built in safety switch which will not allow the system to operate until the speed of the motorhome is greater than 30 mph.

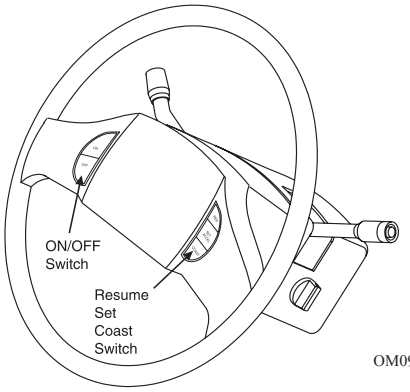


OM090292D

**To Set Speed:** Push and release the **ON/OFF** switch on the steering wheel. Accelerate to the desired speed which exceeds 30 mph. When obtained, hold the desired speed with the foot pedal while the **SET** switch is pressed and released. One second after the switch is released the foot can be removed from the accelerator pedal. Speed can be increased at any time with pressure on the accelerator pedal. When the accelerator pedal is released the set speed will resume.

**To Accelerate:**

When the cruise is engaged there are two ways to accelerate the motorhome. Push and hold the **SET** switch on steering wheel to accelerate the motorhome. In using the **SET** switch, once the **SET** switch is released that speed will then automatically become the new default speed setting. The other option for acceleration is simply press on the accelerator pedal. When the accelerator pedal is released the original programmed speed will resume.

**To Coast:**

The **COAST** switch on steering wheel will allow the motorhome to coast or slow in speed. When the **COAST** switch is pressed and held the motorhome will slow in speed. When released the motorhome programmed set speed will automatically set to the adjusted coast speed.

**To Disengage:**

The cruise can be disengaged by two methods, simply press the brake pedal and the current programmed speed is canceled. Pressing and releasing the **ON/OFF** switch on steering wheel will erase the programmed speed and turn OFF the cruise function.

**To Resume:**

When disengaging the system with the brake does not erase the set speed from memory even if a complete stop is reached. To return to the chosen speed drive to a speed above 30 mph then push the **RESUME** switch on steering wheel. The speed control program will return to that original set speed. If the rate of acceleration is faster or slower than desired, use the accelerator to obtain a speed close to pre-set speed then push the **RESUME** switch. The cruise control will automatically turn off when ignition switch is disengaged.

## *Tilt Steering*

The control for the steering wheel tilt is a lever located on the steering column near the dash. Pulling the lever will allow changes to be made in the tilt of the steering wheel. Adjust the wheel to the desired position then release the lever.

## *Wiper/Washer Operation*

When the end of the arm is pressed in washer fluid will be dispensed from the system and the wipers will turn on momentarily. Holding the tip, pushed in, fluid will continue to be dispensed until the tip is released.

Wiper operations are controlled when rotating the end of the arm. When the end of the arm is rotated from **OFF** to **DELAY** the wipers will turn on and a time delay between wipes (ranging from 45 seconds to 2 seconds) will occur. The amount of delay time changes as arm end is rotated. A continuous low or high speed can be obtained by rotating the arm end to appropriate position. The wipers will be turned OFF with the switch in the **OFF** position.

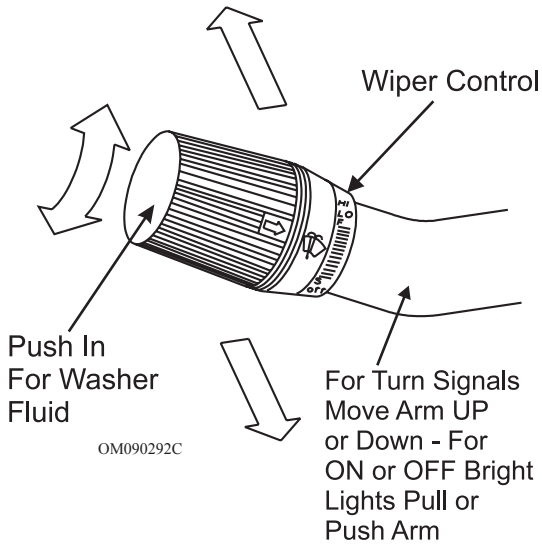

## Turn Signals & Headlight High/Low Beams

Moving the arm upward will activate the right hand turn signal circuitry. A downward movement will activate the left hand turn signal circuitry. When the headlights are ON pushing the arm away from steering wheel will switch the headlights from low to high beam. This position will require a slight pull towards the steering wheel to change from high to low beam. There is blue headlight indicator in the dash cluster which indicates when high beams are selected. The headlight ICC circuitry can be operated by momentarily pulling the arm all the way up towards the steering wheel and releasing. This procedure, when repeated several times in succession, will flash the headlights.

## Overdrive Lock-out Switch

The lock out overdrive is for towing or direct drive transmission operation. Push in on the button located on end of shift lever and the indicator light on the lever dash cluster will illuminate. This should be engaged for mountain driving. Return to overdrive operation by pushing the button in and release. The indicator light on the lever will go out. This is the normal indication.

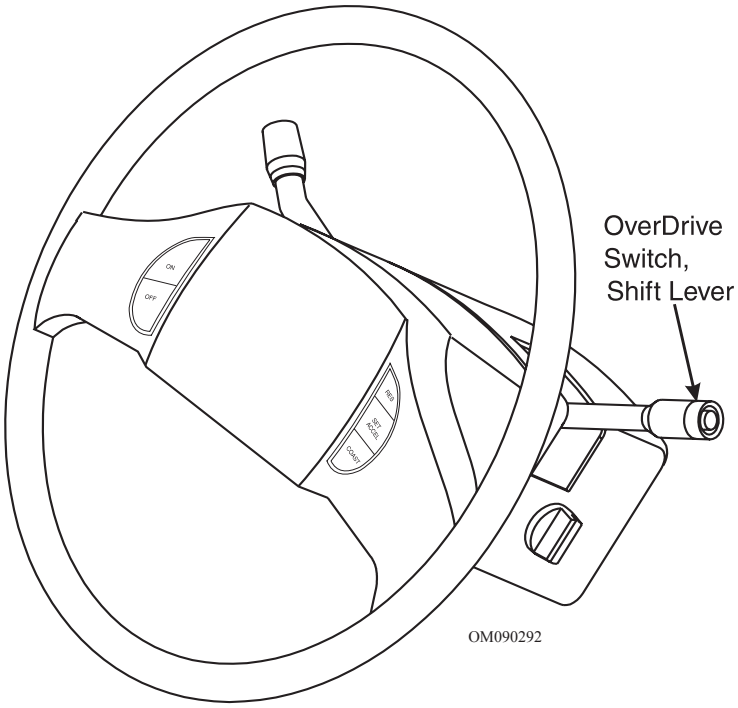


## Hazard Flasher

The flasher button is located on the top of the steering column.

- To turn four way flasher on, push in on flasher button. This will release the switch and activate the flashers circuitry.
- To shut off the flasher again push in on the push button, locking the button inward.

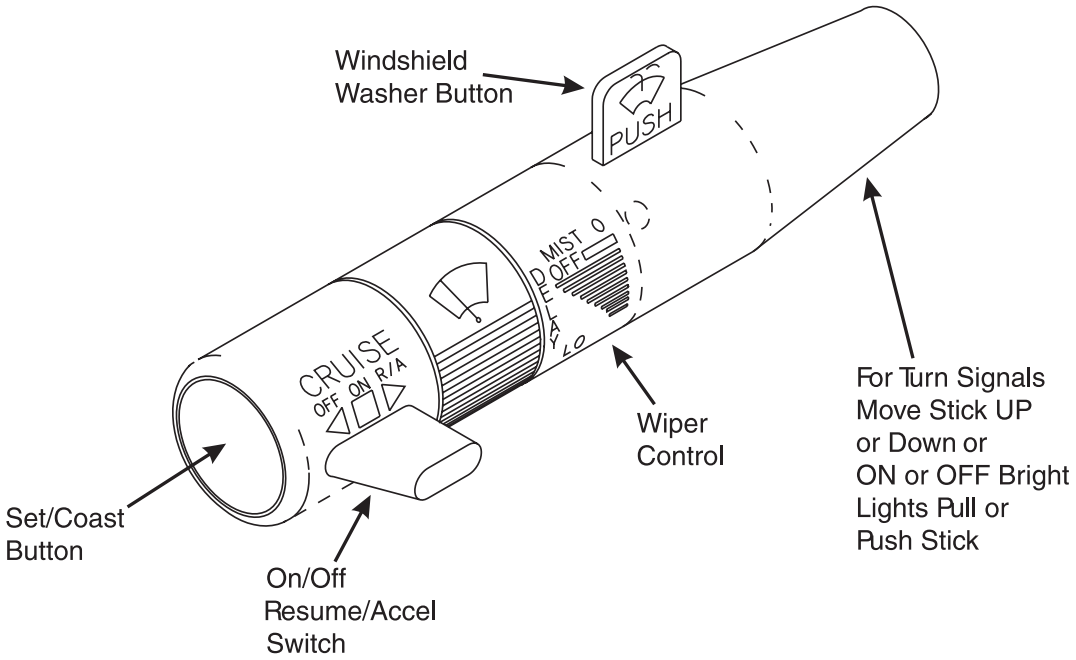


The lever on the left side of the steering column includes:

- Turn Signal and Lane Changer.
- Headlamp High/Low Beam Changer.
- Windshield Wipers.
- Windshield Washer.
- Cruise Control.

**Turn Signal and Lane Change Indicator**

The turn signal has two upward (for right) and two downward (for left) positions. These positions allow you to signal a turn or a lane change.

To signal a turn, move the lever all the way up or down. When the turn is finished, the lever will return automatically.

To signal a lane change, raise or lower the lever until the arrow starts to flash. Hold until you complete the lane change. The lever will return by itself when released.

If the arrows do not flash but just stay on when signaling a turn or a lane change, a signal bulb may be burned out that prevents activation of the turn signal. If a bulb is burned out, replace the bulb to avoid an accident. If the arrows do not go on when signaling a turn, inspect the fuse and check for burned out bulbs.

**Headlamp High/Low Beam Changer**

To change the headlamps for low beam to high beam, or high to low, pull the turn signal lever all the way forward, then release.

**Wiper/Washer Operation**

Push button to wash position and release. Wash solution is delivered within approximately 5 seconds and wipers will turn on and off automatically. A continuous wash and wipe is performed as long as wash button is activated.

When rotating smart stick section from OFF to delay, turn wipers on and a delay between wipes (ranging from 45 seconds to 2 seconds) will occur. Delay time changes as stick is turned forward. A continuous low or high speed can be obtained by rotating section to appropriate position. To turn wipers off rotate stick to OFF position.

**Cruise Control**

Cruise control will maintain a speed of about 25 mph (40 km/h) or more without depressing the accelerator. Cruise control does not work at speeds below about 25 mph (40 km/h).

Cruise control disengages when the brakes are applied.

**To Set Speed** - Move slide on smart stick to ON position and drive at desired speed above 25 mph. Hold desired speed while pressing and then releasing Set/Coast button. One second after release, remove foot from accelerator pedal. Increase speed at any time by pressing on the accelerator pedal. Releasing the accelerator pedal will return to set speed.

**To Accelerate** - Hold slide switch in Resume/Accel position and the motorhome will accelerate. Release switch and the motorhome will slow to set speed. To set speed higher, release slide button and immediately press and release Set/Coast button as motorhome reaches desired speed.

**To Coast** - Press and hold Set/Coast button in and allow motorhome to coast. To set speed lower, release button as motorhome approaches desired speed.

**To Disengage** - Depress brake pedal to manually control the motorhome's speed. Disengage speed control by pushing slide switch to OFF.

**To Resume** - Disengaging system with the brake does not erase set speed from memory, even at a complete stop. To return to the chosen speed, drive to a speed above 25 mph, then move slide button to Resume/Accel position and release. Speed control will return to the original set speed. If rate of acceleration is faster or slower than preferred, use accelerator to obtain a speed close to set speed, slide button to Resume/Accel position and release. There is no drain on battery when ignition switch is off, even if cruise is left on.

## ~ NOTES ~

# *LaPalma - Under Hood*

**UNDER HOOD** ..... **345**
Ford Chassis ..... 345
Workhorse Chassis ..... 346
**FRONT AXLE - WORKHORSE** ..... **348**
Oil Filled Bearings ..... 348
**TIRE CHART** ..... **349**
**COMMON PARTS** ..... **350**
**SPECIFICATION CHARTS** ..... **350**
**ENGINE SPECIFICATIONS** ..... **351**
**METRIC/U.S. CONVERSION CHART** ..... **352**
**MAINTENANCE RECORD** ..... **353**

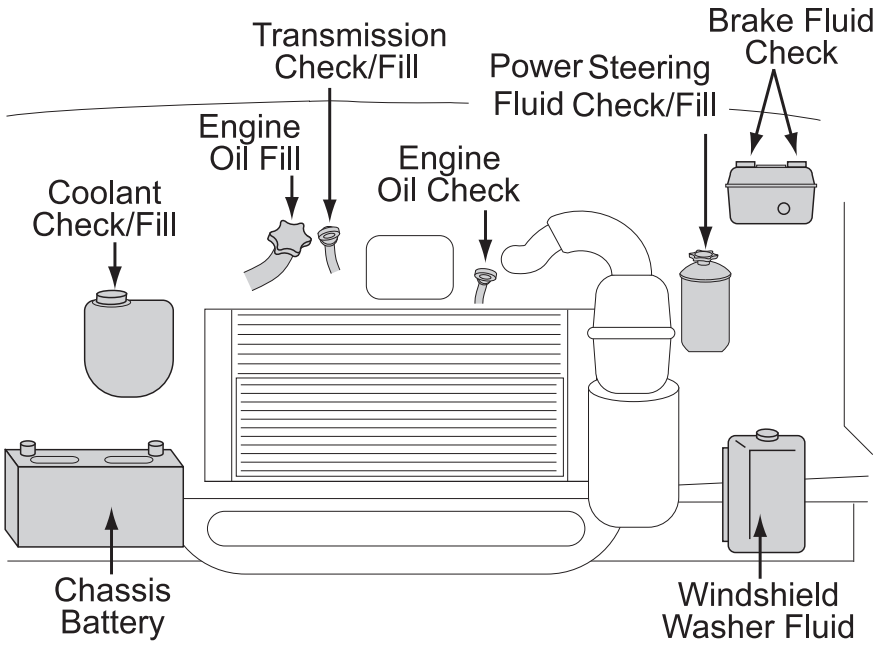


OM090429B

**Windshield Washer Reservoir** - Fill with windshield washer fluid, not water.

**Engine Oil Filter Cap** - SAE 5W-20 with API certification recommended for all temperatures.

**Automatic Transmission Fluid Dispstick** - Check with engine on and at normal temperature; fluid should be within crosshatched area on dipstick. Use MOTORCRAFT MERCON® AFT or equivalent.

**Engine Oil Dipstick** - Check with engine off and at normal temperatures; oil should be within crosshatched area on dipstick; do not fill above MAX mark.

**Engine Coolant Reservoir** - Level with COLD FILL RANGE when cold; use 50% Ford Premium/Engine Coolant or equivalent and 50% water.

**NOTE: Do not mix green and orange coolant.**

**WARNING: Remove coolant cap only when safe and engine is cool. Use only recommended engine coolant, see Owners Guide for more information.**

**NOTE: If the coolant system runs dry, the Fail Safe Cooling System will shut down half of the cylinders (alternating) and the Service Engine Soon warning light (See instrument Panel) illuminates. If the temperature rises too high, engine automatically shuts off to help prevent further damage; service cooling system as soon as possible. Cooling fan clutch will increase engine noise when engaged. This is normal.**

**Brake Fluid Reservoir -** Clean filter cap before removing; use only DOT 3 fluid from a sealed container.

**Power Steering Fluid -** Check with engine OFF and cold; fluid level on dipstick should be between arrows in FULL/COLD range.

**Battery** - See ELECTRICAL SYSTEMS.

## *Workhorse Chassis*

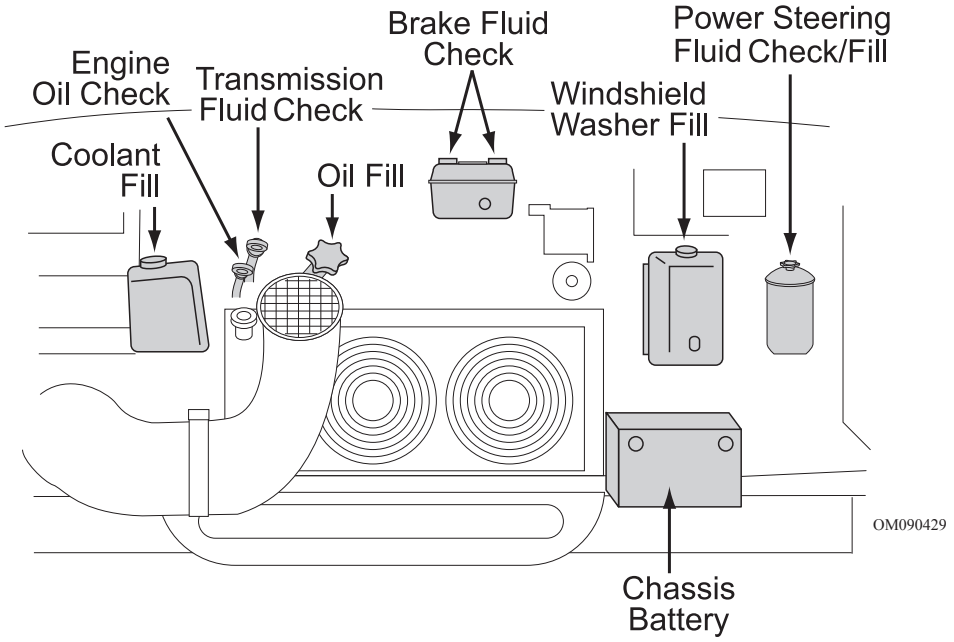


**Windshield Washer Reservoir** - Fill with windshield washer fluid, not water.

**Engine Oil Filter Cap** - SAE 5W-20 with API certification recommended for all temperatures.

**Automatic Transmission Fluid Dispstick** - Check with engine on and at normal temperature; fluid should be within crosshatched area on dipstick, use MOTORCRAFT MERCON® AFT or equivalent.

**Engine Oil Dipstick** - Check with engine off and at normal temperatures; oil should be within crosshatched area on dipstick; do not fill above MAX mark.

**Engine Coolant Reservoir** - Level with COLD FILL RANGE when cold; use 50% Ford Premium/Engine Coolant or equivalent and 50% water.

**NOTE: Do not mix green and orange coolant.**

**WARNING: Remove coolant cap only when safe and engine is cool. Use only recommended engine coolant, see Owners Guide for more information.**

**NOTE: If the coolant system runs dry, the Fail Safe Cooling System will shut down half of the cylinders (alternating) and the Service Engine Soon warning light (See instrument Panel) illuminates. If the temperature rises too high, engine automatically shuts off to help prevent further damage; service cooling system as soon as possible. Cooling fan clutch will increase engine noise when engaged. This is normal.**

**Brake Fluid Reservoir -** Clean filter cap before removing. Use only DOT 3 fluid from a sealed container.

**Power Steering Fluid -** Check with engine OFF and cold; fluid level on dipstick should be between arrows in FULL/COLD range.

**Battery** - See ELECTRICAL SYSTEMS.

## FRONT AXLE - WORKHORSE
### *Oil Filled Bearings*

All front axles use oil to lubricate the wheel bearings. Inspect the oil level before every trip or every 5,000 miles. The oil is drained and refilled without removing the wheel end assembly. Remove hubcap to access the bearing cover and drain plug.

**To Inspect the Oil Level:**
- Remove the chrome hubcap.
- Locate the full and add mark on the outside of the clear plastic cover.
- If the lubricant level is low, add the recommended fluid until full.

The recommended oil change interval is based on the operating conditions, speeds and loads. Limited service applications may allow the recommended interval to be increased. Severe applications may require the recommended interval to be reduced. For more information, contact a Westport service representative.

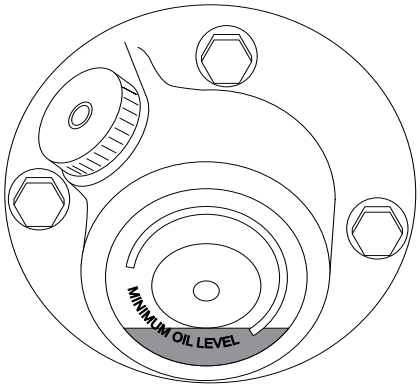


090311b

**Recommended Interval Change:**
- Change the fluid whenever the seals are replaced, the brakes are relined or at 30,000 miles (48,000km). However, check the lubricant twice a year (spring and fall) for contamination. Change as needed.
- If yearly mileage is less than 30,000 miles, change twice a year (spring and fall).

**Lubricant Type:**
- Standard 90 wt. API GL-5. Lubricant temperature must never exceed 250ºF (+121ºC).

**To Drain:**
- Place a suitable container below the bearing cover and remove the drain plug.
- Fill bearing assembly to the full level with the recommended lubricant.

| TIRE SIZE | MAX Speed Rating (MPH) | Dual (D) Single (S) | INFLATION PRESSURE - PSI | | | | | | | | | | | | |
|---|---|---|---|---|---|---|---|---|---|---|---|---|---|---|---|
| | | | 65 | 70 | 75 | 80 | 85 | 90 | 95 | 100 | 105 | 110 | 115 | 120 | 125 |
| LT225/75R16 | 65 | D | 2150 | 2220 | 2330 | 2470 | | | | | | | | | |
| | | S | 2335 | 2440 | 2560 | 2680 | | | | | | | | | |
| 8R19.5 | 75 | D | 2350 | 3460 | 3570 | 2680 | 2780 | 2880 | 2980 | 3070 | 3160 | **3375(F)** | | | |
| | | S | 2410 | 2540 | 2680 | 2800 | 2930 | 3060 | 3170 | 3280 | 3400 | **3500(F)** | | | |
| 225/70R19.5 | 75 | D | | 2720 | 2860 | 3000 | 3115 | 3245 | **3415(F)** | | | | | | |
| | | S | | 2895 | 3040 | 3195 | 3315 | 3450 | **3640(F)** | | | | | | |
| 245/70R19.5 | 75 | D | | 3415 | 3515 | 3655 | **3875(F)** | 3940 | 4075 | **4375(G)** | | | | | |
| | | S | | 3640 | 3740 | 3890 | **4080(F)** | 4190 | 4335 | **4545(G)** | | | | | |
| 265/70R19.5 | 75 | D | | | | 3750 | 3930 | 4095 | 4300 | 4405 | 4560 | 4805 | 4860 | **5070(G)** | |
| | | S | | | | 3970 | 4180 | 4355 | 4540 | 4685 | 4850 | 5070 | 5170 | **5355(G)** | |
| 9R22.5 | 65 | D | 3120 | 3270 | 3410 | 3550 | 3690 | 3820 | **3950(F)** | | | | | | |
| | | S | 3190 | 3370 | 3560 | 3730 | 3890 | 4050 | 4210 | 4350 | **4500(F)** | | | | |
| 10R22.5 | 65 | D | 3690 | 3870 | 4040 | 4200 | 4375 | 4520 | 4670 | **4875(F)** | 4970 | 5110 | **5250(G)** | | |
| | | S | 3770 | 4000 | 4210 | 4410 | 4610 | 4790 | 4970 | **5150(F)** | 5320 | 5490 | **5680(G)** | | |
| 11R22.5 | 75 | D | | | | 4760 | 4950 | 5120 | 5300 | 5470 | **5750(G)** | **5800(H)** | | | |
| | | S | | | | 4990 | 5220 | 5430 | 5640 | 5840 | **6175(G)** | 6240 | 6430 | **6610(H)** | |
| 12R22.5 | 65 | D | | | | 5190 | 5390 | 5590 | 5780 | 5960 | 6150 | 6320 | 6500 | **6750(H)** | |
| | | S | | | | 5450 | 5690 | 5920 | 6140 | 6370 | 6590 | 6790 | 7010 | **7390(H)** | |
| 235/80R22.5 | 75 | D | | | 3395 | 3594 | 3814 | 4035 | 4278 | 4410 | | | | | |
| | | S | | | 3593 | 3815 | 4035 | 4278 | 4543 | 4675 | | | | | |
| 245/75R22.5 | 75 | D | | 3260 | 3425 | 3640 | 3740 | 3890 | 4080 | 4190 | 4335 | **4410(G)** | | | |
| | | S | | 3470 | 3645 | 3860 | 3980 | 4140 | 4300 | 4455 | 4610 | **4675(G)** | | | |
| 255/70R22.5 | 75 | D | | 3585 | 3765 | 3970 | 4110 | 4275 | 4410 | 4455 | 4610 | 4675 | **5070(H)** | | |
| | | S | | 3815 | 4005 | 4190 | 4370 | 4550 | 4675 | 4895 | 5065 | 5205 | **5510(H)** | | |
| 265/75R22.5 | 75 | D | | | 4040 | 4205 | 4370 | 4525 | 4685 | **4805(G)** | | | | | |
| | | S | | | 4070 | 4255 | 4440 | 4620 | 4800 | 4975 | 5150 | **5205(G)** | | | |
| 275/80R22.5 | 75 | D | | | | | 4855 | 5080 | 5305 | 5525 | 5745 | 5965 | 6180 | **6395(H)** | |
| | | S | | | | | 5265 | 5515 | 5755 | 6000 | 6235 | 6475 | 6710 | **6940(H)** | |
| 295/75R22.5 | 75 | D | | | 4690 | 4885 | 5070 | 5260 | 5440 | **5675(G)** | 5800 | **6005(H)** | | | |
| | | S | | | 4725 | 4945 | 5155 | 5370 | 5510 | 5780 | 5980 | **6175(G)** | 6370 | **6610(H)** | |
| 295/80R22.5 | 75 | D | | | | 4855 | 5100 | 5335 | 5570 | 5805 | 6035 | 6265 | 6490 | 6720 | **6940(H)** |
| | | S | | | | 5480 | 5750 | 6020 | 6285 | 6550 | 6810 | 7070 | 7320 | 7580 | **7830(H)** |
| 315/80R22.5 | 75 | D | | | | | 5840 | 6070 | 6395 | 6540 | 6770 | 6940 | 7210 | **7610(J)** | 7390 |
| | | S | | | | | 6415 | 6670 | 6940 | 7190 | 7440 | 7610 | 7920 | **8270(J)** | 8820 |
| 285/75R24.5 | 75 | D | | | 4740 | 4930 | 5205 | 5310 | 5495 | **5675(G)** | | | | | |
| | | S | | | 4770 | 4990 | 5210 | 5420 | 5675 | 5835 | 6040 | **6175(G)** | | | |

Holiday Rambler is not the author of this chart and makes no representation or warranty concerning the accuracy of the information disclosed by the chart. Holiday Rambler is not responsible for the accuracy of the information disclosed or for any error wi

## COMMON PARTS

| FORD | |
|---|---|
| 6.8L V10 ENGINE | |
| Air Filter | FA-1634 |
| Battery | BXT-65-750 |
| Fuel Filter | FG986B |
| Oil Filter | FL-820-S |
| PCV Valve | EV-233 |
| Spark Plugs | AWSF22E |

| WORKHORSE | |
|---|---|
| 8.1L V8 AS FUEL INJECTION | |
| Air Filter | A1236C |
| Fuel Filter | GF481 |
| Oil Filter | PF454 |
| Spark Plugs | 42-99321 |
| Radiator Cap | RC33 |

## SPECIFICATION CHARTS

| MODELS | 33PBD | 34SBD | 34PBD | 34PDT | 36PED | 36WDD | 36DBD | 37PCD | 37PCT |
|---|---|---|---|---|---|---|---|---|---|
| Wheelbase | 228" | 228" | 228" | 228" | 238" | 238" | 238" | 242" | 242" |
| Overall Length | 33' 11" | 34' 10" | 34' 10" | 34' 10" | 36' 5" | 36' 5" | 36' 5" | 36' 11" | 36' 11" |
| Overall Height, Including A/C, Ford | 11'-9" | 11'-9" | 11'-9" | 11'-9" | 11'-9" | 11'-9" | 11'-9" | 11'-9" | 11'-9" |
| Overall Height, Including A/C, Workhorse | 11'-8" | 11'-8" | 11'-8" | 11'-8" | 11'-8" | 11'-8" | 11'-8" | 11'-8" | 11'-8" |
| Interior Height | 6' 6" | 6' 6" | 6' 6" | 6' 6" | 6' 6" | 6' 6" | 6' 6" | 6' 6" | 6' 6" |
| Interior Width | 94.5" | 94.5" | 94.5" | 94.5" | 94.5" | 94.5" | 94.5" | 94.5" | 94.5" |
| Exterior Width | 100.5" | 100.5" | 100.5" | 100.5" | 100.5" | 100.5" | 100.5" | 100.5" | 100.5" |

| | 33PBD | 34SBD | 34PBD | 34PDT | 36PED | 36WDD | 36DBD | 37PCD | 37PCT |
|---|---|---|---|---|---|---|---|---|---|
| **FORD** | | | | | | | | | |
| Gross Vehicle Weight Rating | 22,000 lbs. | 22,000 lbs. | 22,000 lbs. | 22,000 lbs. | 22,000 lbs. | 22,000 lbs. | 22,000 lbs. | 22,000 lbs. | 22,000 lbs. |
| Gross Combined Weight Rating | 26,000 lbs. | 26,000 lbs. | 26,000 lbs. | 26,000 lbs. | 26,000 lbs. | 26,000 lbs. | 26,000 lbs. | 26,000 lbs. | 26,000 lbs. |
| Front Gross Axle Weight Rating | 7,500 lbs. | 7,500 lbs. | 7,500 lbs. | 7,500 lbs. | 7,500 lbs. | 7,500 lbs. | 7,500 lbs. | 7,500 lbs. | 7,500 lbs. |
| Rear Gross Axle Weight Rating | 14,500 lbs. | 14,500 lbs. | 14,500 lbs. | 14,500 lbs. | 14,500 lbs. | 14,500 lbs. | 14,500 lbs. | 14,500 lbs. | 14,500 lbs. |
| **WORKHORSE** | W-22 | W-22 | W-22 | W-22 | W-22 | W-22 | W-22 | W-22 | |
| Gross Vehicle Weight Rating | 22,000 lbs. | 22,000 lbs. | 22,000 lbs. | 22,000 lbs. | 22,000 lbs. | 22,000 lbs. | 22,000 lbs. | 22,000 lbs. | N/A |
| Gross Combined Weight Rating | 26,000 lbs. | 26,000 lbs. | 26,000 lbs. | 26,000 lbs. | 26,000 lbs. | 26,000 lbs. | 26,000 lbs. | 26,000 lbs. | N/A |
| Front Gross Axle Weight Rating | 8,000 lbs. | 8,000 lbs. | 8,000 lbs. | 8,000 lbs. | 8,000 lbs. | 8,000 lbs. | 8,000 lbs. | 8,000 lbs. | N/A |
| Rear Gross Axle Weight Rating | 14,500 lbs. | 14,500 lbs. | 14,500 lbs. | 14,500 lbs. | 14,500 lbs. | 14,500 lbs. | 14,500 lbs. | 14,500 lbs. | N/A |

| MODELS | 33PBD | 34SBD | 34PBD | 34PDT | 36PED | 36WDD | 36DBD | 37PCD | 37PCT |
|---|---|---|---|---|---|---|---|---|---|
| Water Heater | 10 gal. | 10 gal. | 10 gal. | 10 gal. | 10 gal. | 10 gal. | 10 gal. | 10 gal. | 10 gal. |
| Grey Tank | 42 gal. | 40 gal. | 42 gal. | 42 gal. | 54 gal. | 54 gal. | 42 / 39gal. | 45 gal | 45 gal |
| Black Tank | 42 gal. | 42 gal. | 42 gal. | 42 gal. | 45 gal. | 45 gal. | 42 / 39gal. | 54 gal | 54 gal |
| Fresh Tank | 60 gal. | 60 gal. | 60 gal. | 60 gal. | 60 gal. | 60 gal. | 60 gal. | 60 gal | 60 gal |
| LP Tank * | 24 gal. | 24 gal. | 24 gal. | 24 gal. | 24 gal. | 24 gal. | 24 gal. | 24 gal. | 24 gal. |

**Actual filled LP capacity is 80% of listing due to safety shut off required on tank.*

**NOTE: This chart reflects product specification available at the time of printing. Therefore any floor plans thereafter may not be reflected in the chart. All other information contained throughout the manual will still apply.**

**NOTE: All tank capacities are estimated based upon calculations provided by the tank manufacturers and represent approximate capacities. The actual "useable capacity" may be greater or less then the estimated capacities based upon fabrication and installation of the tanks.**

## FORD

| | |
|---|---|
| Engine Type | Ford V10 Gas Fuel Injection |
| Engine Size | 6.8L V10 |
| Cubic Inch Displacement | 415 |
| Tire Size | 245/70RX19.5F |
| Fuel Tank (Approx. Gal) | 75 |
| Alternator (Amp) | 130 |
| Rear Axle Ratio | 5.38:1 |

## WORKHORSE

| | |
|---|---|
| Engine Type | V8 Gas Fuel Injection |
| Engine Size | 8.1L V8 |
| Cubic Inch Displacement | 496 |
| Tire Size | 235/80RX22.5G or 245/70RX19.5F |
| Fuel Tank (Approx. Gal) | 75 |
| Alternator (Amp) | 130 or 145 |
| Rear Axle Ratio | 5.38:1 |

# METRIC/U.S. CONVERSION CHART

| U.S. Customary to Metric | | |
|---|---|---|
| Measurement | Multiplied By | Equals/Measurement |
| **Length** | | |
| inches (in) | 25.4 | millimeters (mm) |
| inches (in) | 2.54 | centimeters (cm) |
| feet (ft) | 0.3048 | meters (m) |
| yards (yd) | 0.9144 | meters (m) |
| miles (mi) | 1.609 | kilometers (km) |
| **Area** | | |
| square inches ($in^2$) | 645.16 | square millimeters ($mm^2$) |
| square inches ($in^2$) | 6.452 | square centimeters ($mm^2$) |
| square feet ($ft^2$) | 0.0929 | square meters ($mm^2$) |
| **Volume** | | |
| cubic inches ($in^3$) | 16387 | cubic millimeters ($cm^3$) |
| cubic inches ($in^3$) | 16.387 | cubic millimeters ($cm^3$) |
| cubic inches ($in^3$) | 0.01639 | liters (L) |
| fluid ounces (fl oz) | 29.54 | milliliters (mL) |
| pints (pt) | 0.47318 | liters (L) |
| quarts (qt) | 0.94635 | liters (L) |
| gallons (gal) | 3.7854 | liters (L) |
| cubic feet ($ft^3$) | 28.317 | liters (L) |
| cubic feet ($ft^3$) | 0.02832 | cubic meters ($m^3$) |
| **Weight/Force** | | |
| ounces (av) (oz) | 28.35 | grams (g) |
| pounds (av) (lb) | 0.454 | kilograms (kg) |
| U.S. tons (t) | 907.18 | kilograms (kg) |
| U.S. tons (t) | 0.90718 | metric tons (MT or t) |
| **Torque/Work Force** | | |
| inch-pounds (lbf.in) | 11.298 | Newton-centimeters (N.cm) |
| foot-pounds (lbf.ft) | 1.3558 | Newton-meters (N.m) |
| **Pressure Vacuum** | | |
| inches of mercury (inHg) | 3.37685 | kilopascals (kPa) |
| pounds per square inch (psi) | 6.895 | kilopascals (kPa) |

| Metric to U.S. Customary | | |
|---|---|---|
| Measurement | Multiplied By | Equals/Measurement |
| **Length** | | |
| millimeters (mm) | 0.03937 | inches (in) |
| centimeters (cm) | 0.3937 | inches (in) |
| meters (m) | 3.281 | feet (ft) |
| meters (m) | 1.094 | yards (yd) |
| kilometers (km) | 0.6215 | miles (mi) |
| **Area** | | |
| square millimeters ($mm^2$) | 0.00155 | square inches ($in^2$) |
| square centimeters ($mm^2$) | 0.15 | square inches ($in^2$) |
| square meters ($mm^2$) | 10.764 | square feet ($ft^2$) |
| **Volume** | | |
| cubic millimeters ($cm^3$) | 0.000061 | cubic inches ($in^3$) |
| cubic millimeters ($cm^3$) | 0.06102 | cubic inches ($in^3$) |
| liters (L) | 61.024 | cubic inches ($in^3$) |
| milliliters (mL) | 0.03381 | fluid ounces (fl oz) |
| liters (L) | 2.1134 | pints (pt) |
| liters (L) | 1.0567 | quarts (qt) |
| liters (L) | 0.2642 | gallons (gal) |
| liters (L) | 0.03531 | cubic feet ($ft^3$) |
| cubic meters ($m^3$) | 35.315 | cubic feet ($ft^3$) |
| **Weight/Force** | | |
| grams (g) | 0.03527 | ounces (av) (oz) |
| kilograms (kg) | 2.205 | pounds (av) (lb) |
| kilograms (kg) | 0.001102 | U.S. tons (t) |
| metric tons (MT or t) | 1.1023 | U.S. tons (t) |
| **Torque/Work Force** | | |
| Newton-centimeters (N.cm) | 0.08851 | inch-pounds (lbf.in) |
| Newton-meters (N.m) | 0.7376 | foot-pounds (lbf.ft) |
| **Pressure Vacuum** | | |
| kilopascals (kPa) | 0.29613 | inches of mercury (inHg) |
| kilopascals (kPa) | 0.14503 | pounds per square inch (psi) |

| U.S. Customary to Metric | | | |
|---|---|---|---|
| Measurement | Subtract | Divide By | Equals Measurement |
| **Temperature** | | | |
| Fahrenheit (ºF) | 32 | 1.8 | Celsius (ºC) |

| Metric to U.S. Customary | | | |
|---|---|---|---|
| Measurement | Multiplied By | Add | Equals Measurement |
| **Temperature** | | | |
| Celsius (ºC) | 1.8 | 32 | Fahrenheit (ºF) |

After scheduled services are performed, record the date, odometer reading and who performed the service in the boxes provided after the maintenance interval. Any additional information from "Owner Checks and Services" or "Periodic Maintenance" can be added on the following record pages. In addition, you should retain all maintenance receipts. The owner information portfolio is a convenient place to store them.

## LUBRICATION SERVICE RECORD

KEY TO SERVICES

A – Lubrication & Inspection
A1 – Motor Oil & Filter Change
A2 – Transmission Oil Change
A3 – Drive Axle Oil Change
A4 – Wheel Bearing Service
B – Prescribed Service
C – Prescribed Service
D – Prescribed Service
E – Prescribed Service

| MILEAGE | SERVICES | | | | | | | | | JOB PERFORMED | |
|---|---|---|---|---|---|---|---|---|---|---|---|
| | A | A1 | A2 | A3 | A4 | B | C | D | E | DATE | BY |
| 1 | | | | | | | | | | | |
| 2 | | | | | | | | | | | |
| 3 | | | | | | | | | | | |
| 4 | | | | | | | | | | | |
| 5 | | | | | | | | | | | |
| 6 | | | | | | | | | | | |
| 7 | | | | | | | | | | | |
| 8 | | | | | | | | | | | |
| 9 | | | | | | | | | | | |
| 10 | | | | | | | | | | | |
| 11 | | | | | | | | | | | |
| 12 | | | | | | | | | | | |
| 13 | | | | | | | | | | | |
| 14 | | | | | | | | | | | |
| 15 | | | | | | | | | | | |
| 16 | | | | | | | | | | | |
| 17 | | | | | | | | | | | |
| 18 | | | | | | | | | | | |
| 19 | | | | | | | | | | | |
| 20 | | | | | | | | | | | |
| 21 | | | | | | | | | | | |
| 22 | | | | | | | | | | | |
| 23 | | | | | | | | | | | |
| 24 | | | | | | | | | | | |
| 25 | | | | | | | | | | | |
| 26 | | | | | | | | | | | |
| 27 | | | | | | | | | | | |
| 28 | | | | | | | | | | | |
| 29 | | | | | | | | | | | |
| 30 | | | | | | | | | | | |

# LUBRICATION SERVICE RECORD

KEY TO SERVICES

A -- Lubrication & Inspection
A1 -- Motor Oil & Filter Change
A2 -- Transmission Oil Change
A3 -- Drive Axle Oil Change
A4 -- Wheel Bearing Service
B – Prescribed Service
C -- Prescribed Service
D -- Prescribed Service
E – Prescribed Service

| MILEAGE | SERVICES | | | | | | | | | JOB PERFORMED | |
|---|---|---|---|---|---|---|---|---|---|---|---|
| | A | A1 | A2 | A3 | A4 | B | C | D | E | DATE | BY |
| 1 | | | | | | | | | | | |
| 2 | | | | | | | | | | | |
| 3 | | | | | | | | | | | |
| 4 | | | | | | | | | | | |
| 5 | | | | | | | | | | | |
| 6 | | | | | | | | | | | |
| 7 | | | | | | | | | | | |
| 8 | | | | | | | | | | | |
| 9 | | | | | | | | | | | |
| 10 | | | | | | | | | | | |
| 11 | | | | | | | | | | | |
| 12 | | | | | | | | | | | |
| 13 | | | | | | | | | | | |
| 14 | | | | | | | | | | | |
| 15 | | | | | | | | | | | |
| 16 | | | | | | | | | | | |
| 17 | | | | | | | | | | | |
| 18 | | | | | | | | | | | |
| 19 | | | | | | | | | | | |
| 20 | | | | | | | | | | | |
| 21 | | | | | | | | | | | |
| 22 | | | | | | | | | | | |
| 23 | | | | | | | | | | | |
| 24 | | | | | | | | | | | |
| 25 | | | | | | | | | | | |
| 26 | | | | | | | | | | | |
| 27 | | | | | | | | | | | |
| 28 | | | | | | | | | | | |
| 29 | | | | | | | | | | | |
| 30 | | | | | | | | | | | |
| 31 | | | | | | | | | | | |
| 32 | | | | | | | | | | | |
| 33 | | | | | | | | | | | |
| 34 | | | | | | | | | | | |
| 35 | | | | | | | | | | | |
| 36 | | | | | | | | | | | |
| 37 | | | | | | | | | | | |
| 38 | | | | | | | | | | | |
| 39 | | | | | | | | | | | |
| 40 | | | | | | | | | | | |
| 41 | | | | | | | | | | | |
| 42 | | | | | | | | | | | |
| 43 | | | | | | | | | | | |
| 44 | | | | | | | | | | | |
| 45 | | | | | | | | | | | |
| 46 | | | | | | | | | | | |
| 47 | | | | | | | | | | | |
| 48 | | | | | | | | | | | |
| 49 | | | | | | | | | | | |
| 50 | | | | | | | | | | | |

## BATTERY RECORD

| MAKE | TYPE | DATE INSTALLED | REPAIRS | DATE REPLACED | SERVICE | |
|---|---|---|---|---|---|---|
| | | | | | MONTHS | MILES |
| | | | | | | |
| | | | | | | |
| | | | | | | |
| | | | | | | |
| | | | | | | |
| | | | | | | |
| | | | | | | |
| | | | | | | |
| | | | | | | |
| | | | | | | |
| | | | | | | |
| | | | | | | |
| | | | | | | |
| | | | | | | |
| | | | | | | |
| | | | | | | |
| | | | | | | |
| | | | | | | |
| | | | | | | |
| | | | | | | |
| | | | | | | |
| | | | | | | |
| | | | | | | |
| | | | | | | |
| | | | | | | |
| | | | | | | |
| | | | | | | |

## TIRE RECORD

| MAKE | TYPE | PLY | DATE INSTALLED | REPAIRS | DATE REPLACED | SERVICE | |
|---|---|---|---|---|---|---|---|
| | | | | | | MONTHS | MILES |
| | | | | | | | |
| | | | | | | | |
| | | | | | | | |
| | | | | | | | |
| | | | | | | | |
| | | | | | | | |
| | | | | | | | |

## BATTERY RECORD

| MAKE | TYPE | DATE INSTALLED | REPAIRS | DATE REPLACED | SERVICE | |
|---|---|---|---|---|---|---|
| | | | | | MONTHS | MILES |
| | | | | | | |
| | | | | | | |
| | | | | | | |
| | | | | | | |
| | | | | | | |
| | | | | | | |
| | | | | | | |
| | | | | | | |
| | | | | | | |
| | | | | | | |
| | | | | | | |
| | | | | | | |
| | | | | | | |
| | | | | | | |
| | | | | | | |
| | | | | | | |
| | | | | | | |
| | | | | | | |
| | | | | | | |
| | | | | | | |
| | | | | | | |
| | | | | | | |
| | | | | | | |
| | | | | | | |
| | | | | | | |
| | | | | | | |
| | | | | | | |

## TIRE RECORD

| MAKE | TYPE | PLY | DATE INSTALLED | REPAIRS | DATE REPLACED | SERVICE | |
|---|---|---|---|---|---|---|---|
| | | | | | | MONTHS | MILES |
| | | | | | | | |
| | | | | | | | |
| | | | | | | | |
| | | | | | | | |
| | | | | | | | |
| | | | | | | | |
| | | | | | | | |

## BATTERY RECORD

| MAKE | TYPE | DATE INSTALLED | REPAIRS | DATE REPLACED | SERVICE | |
|---|---|---|---|---|---|---|
| | | | | | MONTHS | MILES |
| | | | | | | |
| | | | | | | |
| | | | | | | |
| | | | | | | |
| | | | | | | |
| | | | | | | |
| | | | | | | |
| | | | | | | |
| | | | | | | |
| | | | | | | |
| | | | | | | |
| | | | | | | |
| | | | | | | |
| | | | | | | |
| | | | | | | |
| | | | | | | |
| | | | | | | |
| | | | | | | |
| | | | | | | |
| | | | | | | |
| | | | | | | |
| | | | | | | |
| | | | | | | |
| | | | | | | |
| | | | | | | |
| | | | | | | |
| | | | | | | |
| | | | | | | |

## TIRE RECORD

| MAKE | TYPE | PLY | DATE INSTALLED | REPAIRS | DATE REPLACED | SERVICE | |
|---|---|---|---|---|---|---|---|
| | | | | | | MONTHS | MILES |
| | | | | | | | |
| | | | | | | | |
| | | | | | | | |
| | | | | | | | |
| | | | | | | | |
| | | | | | | | |
| | | | | | | | |

## TECHNICAL PUBLICATIONS

**Manager** Vance Buell
**Editing** Technical Publications

## OPERATIONS

### *TECHNICAL WRITERS*

Robert Buckholtz - OR
William Birch - OR
John Banks - OR
Fran Weisenstein - IN

### *CREATIVE DESIGNERS*

Kelly Stroble - OR
Julie Slagle - IN

### *TECHNICAL ILLUSTRATOR*

Kelly Stroble

**The LaPalma 2004 Technical Writer** Fran Weisenstein
**The LaPalma 2004 Layout Design** Julie Slagle
**The LaPalma 2004 Cover Design** Julie Slagle

### *PRINTING*

Holiday Graphics - IN

## ONLINE

**CORPORATE SITE**
www.monacocoach.com

**ONLINE TOURS**
www.monaco-tours.com

# *LaPalma*

## INDEX

# A

**Air Conditioner - Roof . . . . . 172**
Heat Pump (Optional) . . . . . 174
Operating Instructions . . . . . 173
Return Air Filters . . . . . 175
**Appliance - Introduction . . . . . 155**
**Awnings . . . . . 209**
Awning - Automatic Carefree (Optional) . . . . . 214
Awning - Patio . . . . . 210
Awning Care & Maintenance . . . . . 216
Slide-out Cover . . . . . 215
Window Awning (Optional) . . . . . 209

# B

**Backing Up A Motorhome . . . . . 49**
Brake - Parking . . . . . 51
**Battery - How It Works . . . . . 317**
Battery Charge Time & Consumption Rate . . . . . 323
Battery Maintenance . . . . . 318, 320
Battery Types . . . . . 317
Battery Voltage & Current . . . . . 322
Seven Reasons Why Batteries Fail . . . . . 321
Testing the Batteries . . . . . 319
**Battery Cut-Off Switch . . . . . 293**
**Battery Disconnect . . . . . 294**
Chassis . . . . . 294
House . . . . . 294
**Booth Dinette . . . . . 227**
Bed Conversion (Optional) . . . . . 227
Free Standing Table Leaf Extension . . . . . 228
**Breaking Camp . . . . . 59**

# C

**Carbon Monoxide Detector . . . . . 101**
Alarm . . . . . 102
Cleaning . . . . . 103
Operation . . . . . 102
Testing . . . . . 103
Troubleshooting . . . . . 103
**Ceiling . . . . . 127**
**Center Console Panel . . . . . 336**
**Cold Weather Conditions . . . . . 262**
**Common Parts . . . . . 350**
**Compass & Outside Temperature System . . . . . 40**
**Controls . . . . . 331**
**Cooktop . . . . . 169**
**Cooktop with Oven (Optional) . . . . . 171**
**Countertop - Solid Surface . . . . . 132**
Countertops - Laminate . . . . . 133
**Customer Relations . . . . . 15**

# D

**DC 12 Volt System . . . . . 292**
**Door - Sliding . . . . . 222**
**Driver's Door (Optional) . . . . . 199**
**Driving & Safety . . . . . 33**
Familiarize Yourself . . . . . 33
Inspections . . . . . 33
Safety Seat Belts . . . . . 34
Tips for Driving . . . . . 37
**Dry Camping . . . . . 56**

# E

**Egress Exit Window . . . . . 104**
**Electrical Systems - Introduction . . . . . 291**
Converter (55 Amp Only) . . . . . 291
Generator . . . . . 292
Shore Power . . . . . 292

**Emergency Procedures - Roadside . . . . . 60**
Jump Starting. . . . . 62
Light Retractable. . . . . 61
Transmission - Rocking Out . . . . . 61
**Engine Specifications . . . . . 351**
**Entertainment Systems. . . . . 229**
DVD Player (Optional) . . . . . 229
Home Theatre Surround Sound - DVD/CD/TV/VCR/AM & FM Tuner (Optional) . . . . . 234
Hook-ups - TV Cable, Computer & Telephone . . . . . 231
Satellite System - DSS Prewire (Optional). . . . 234
Television (Front) with Lock-out Feature. . . . . 229
Television Antenna . . . . . 230
Video Cassette Recorder (VCR) (Optional) . . . 229
Video Selector Box. . . . . 232
**Entry Door. . . . . 201**
Adjustments. . . . . 201
**Entry Step . . . . . 197**
Lubrication . . . . . 198
Operation. . . . . 197
Tips. . . . . 198
**Equipment - Introduction . . . . . 197**
**Exterior Care. . . . . 109**
Bright Metal. . . . . 111
Care & Maintenance of Wheel Covers . . . . . 112
Corrosion. . . . . 109
Drying . . . . . 110
Tire Care . . . . . 111
Washing . . . . . 109
Waxing. . . . . 110
**Exterior Entertainment Center (Optional . . . . . 240**
**Exterior Maintenance. . . . . 112**
Roof Care & Seal Inspections . . . . . 113

# F

**Fans . . . . . 218**
Bathroom Fan . . . . . 221
Exhaust Fan. . . . . 218
Rain Sensor Exhaust Fan (Optional). . . . . 219
Tips. . . . . 221
**50 Amp Distribution Panel (Optional) . . . 301**
12 Volt Distribution Panel - Outside . . . . . 305
Energy Management System. . . . . 302
House 110 AC Panel. . . . . 301
House 12 Volt . . . . . 305
**Fire Extinguisher . . . . . 104**
**Fireplace Electric (Optional) . . . . . 178**
Maintenance . . . . . 180
Operation. . . . . 179
**Flip Up Table. . . . . 226**
**Floors . . . . . 123**
Carpet Cleaning . . . . . 123
Laminate Floors . . . . . 126
Tile Floors . . . . . 125
**Ford Gauges . . . . . 328**
**Front Axle - Workhorse . . . . . 348**
Oil Filled Bearings . . . . . 348
**Furnace . . . . . 175**
If the Furnace Fails to Light. . . . . 177
Operating Instructions . . . . . 176
Tips. . . . . 177
Using the Furnace. . . . . 176

# G

**General Lubrication Maintenance . . . . . 142**
Greasing. . . . . 144
Lubricant Classification . . . . . 142
Lubricants . . . . . 142
Proper Fluid Disposal. . . . . 143

**Generator - 120 AC . . . . . 298**
Generator Exercise . . . . . 299
**Glossary Of Terms . . . . . 21**

# H

**Hitch . . . . . 45**
Tow Plug Connection . . . . . 47
Using the Rear Receiver. . . . . 45

# I

**Interior Care - Fabrics . . . . . 115**
Fabric Cleaning Codes . . . . . 115
Fabric Specifications Charts. . . . . 117
Leather . . . . . 121
Ultra-Leather . . . . . 122
Vinyl. . . . . 119
**Introduction. . . . . 14**
**Inverter - 130 Watt (Opt). . . . . 306**
**Inverter/Converter - 1500 Watt (Opt) . . . 307**
Battery Charging. . . . . 307
Battery State Indicator . . . . . 309
Charge Cycles . . . . . 310
Circuit Breakers . . . . . 309
Pass-through Relay . . . . . 310
Power Shore . . . . . 310
Programming the Inverter . . . . . 311
Remote Panel . . . . . 308
Stand-By Mode. . . . . 309
Temperature Sensitive Charging . . . . . 311

# L

**Leveling System (Optional) . . . . . 51**
**Limited Warranty Transfer Application . . 29**
**LP-Gas Consumption . . . . . 283**
**LP-Gas Detector . . . . . 98, 272**
Alarm. . . . . 99, 274
Maintenance . . . . . 100, 274
Testing . . . . . 99, 273
**LP-Gas Distribution Lines. . . . . 284**
**LP-Gas Emergence Procedures - Checklist. . . . . 276**
**LP-Gas Fundamentals . . . . . 278**
**LP-Gas Hose Inspection. . . . . 282**
**LP-Gas Regulator . . . . . 280**
**LP-Gas Safety Tips . . . . . 285**
**LP-Gas System . . . . . 271**
**LP-Gas Tank . . . . . 276**
LP-Gas Tank Filling . . . . . 278
Operation . . . . . 276
**LP-Gas Tank - Measurement. . . . . 275**
Tank Capacities - Chart . . . . . 275

# M

**Maintenance Record. . . . . 353**
**Metric/U.S. Conversion Chart. . . . . 352**
**Microwaves . . . . . 162**
Charcoal Filter. . . . . 167
Fan . . . . . 166
General Information . . . . . 162
Maintenance . . . . . 166
Operation - Convection Cooking (Optional) . . 165
Operation - Microwave Cooking. . . . . 164
**Mold & Mildew. . . . . 136**
**Monitor Panel . . . . . 247**
Measurement & Calibration. . . . . 247

# O

**Owner's Record - Insurance . . . . . 20**
**Owner's Record - Personal Property . . . . . 19**
**Owner's Record - Serial Numbers . . . . . 18**

# P

**Pest Control. . . . . 138**
**Pre-Trip Preparations - Checklist. . . . . 42**

# R


**Radios . . . . . 236**
Bedroom . . . . . 237
Citizens Band Radio - Prewire (Optional) . . . . 240
Dash . . . . . 236
**Rear View System (Optional) . . . . . 47**
**Refrigerator . . . . . 155**
Alarm . . . . . 161
Control Panel - Four Door (Optional) . . . . . 158
Control Panel - Two Door . . . . . 157
Cooling Unit Fans (Four Door Models) . . . . . 162
Doors . . . . . 161
Icemaker (Optional) . . . . . 160
Operation Specifics . . . . . 156
Service . . . . . 162
Storage . . . . . 162
**Reporting Safety Defects . . . . . 15**


# S


**Safety Symbol Legend . . . . . 13**
**Service Center . . . . . 248**
**Service Suggestions . . . . . 16**
Be Reasonable With Your Requests . . . . . 17
Inspect the Work Properly . . . . . 17
No Looking Over the Technician's Shoulder . . . 17
Prepare a List . . . . . 17
Prepare for the Appointment . . . . . 17
**Set-Up Procedures - Checklist . . . . . 54**
**Shore Power Hook-Up . . . . . 294**
**Shower . . . . . 127**
**Slide-Out Operation . . . . . 203**
Extending Bedroom Slide-out . . . . . 207
Extending Main Room . . . . . 204
Manual Override Bedroom Slide-out . . . . . 208
Manual Override Main Slide-out . . . . . 206
Retracting Bedroom Slide-out . . . . . 207
Retracting Main Room . . . . . 205
**Smart Stick Workhorse Chassis . . . . . 339**
Operation . . . . . 339
**Smoke Detector . . . . . 96**
Maintenance . . . . . 97
Operation . . . . . 96
Testing . . . . . 96
Troubleshooting . . . . . 97
**Sofa . . . . . 223**
Air Mattress (Optional) . . . . . 225
Easy Bed w/Drawer (Optional) . . . . . 224
Electric Sofa Bed (Optional) . . . . . 226
Hide-A-Bed . . . . . 223
**Specification Charts . . . . . 350**
**Specifications - Dimensions Chart . . . . . 95**
**Steering Wheel (Ford Chassis) . . . . . 336**
Cruise Controls . . . . . 336
Hazard Flasher . . . . . 338
Overdrive Lock-out Switch . . . . . 338
Tilt Steering . . . . . 337
Turn Signals & Headlight
High/Low Beams . . . . . 338
Wiper/Washer Operation . . . . . 337
**Storage . . . . . 145**
Long Term . . . . . 146
Removal from Storage . . . . . 150
Short Term . . . . . 145
Winter Storage - Checklist . . . . . 149
**Storage - Cold Weather . . . . . 263**
**Storage Under Bed . . . . . 228**
**Sunvisors (Optional) . . . . . 217**
**Survey . . . . . 27**
**Switches . . . . . 330**


# T


**Taking Delivery . . . . . 15**
Customer Responsibilities . . . . . 16
Dealer Responsibilities . . . . . 16
Monaco Coach Responsibilities . . . . . 15
**Tank Capacities - Chart . . . . . 254**
**30 Amp Distribution Panel . . . . . 300**
Fuses & Circuits . . . . . 300
**Tire Chart . . . . . 349**

**Tires . . . . . 66**
Air Pressure Checklist . . . . . 72
Importance of Air Pressure. . . . . 67
In Case of Flat Tire . . . . . 75
Inspecting & Pressure. . . . . 70
Storage of Tires - Long Term. . . . . 77
Supporting When Leveling . . . . . 73
Tire Care . . . . . 75
Tire Chart - Goodyear. . . . . 69
Tire Pressure Inflation Guideline. . . . . 68
Tire Rotation . . . . . 74
Tire Vibration . . . . . 74
Tread . . . . . 74
**Toilet. . . . . 259**
Cleaning. . . . . 259
Drain Traps & Auto Vents . . . . . 261
Maintenance . . . . . 260
Operation. . . . . 259
**Towing Procedures . . . . . 65**
**Transfer Switch. . . . . 297**
**12 Volt Distribution Panel - Front. . . . . 312**
Circuit Breakers . . . . . 315
Ford Chassis . . . . . 312
Knowing When to Say No. . . . . 316
Tools of the Trade. . . . . 316
Workhorse Chassis . . . . . 314

# U

**Under Hood. . . . . 345**
Ford Chassis . . . . . 345
Workhorse Chassis . . . . . 346

# V

**Vendor List . . . . . 24**
**Views . . . . . 93**
Curbside. . . . . 94
Front. . . . . 93
Rear . . . . . 93
Roadside . . . . . 94

# W

**Wall Coverings . . . . . 128**
**Wall Thermostat . . . . . 172**
**Warranty Information File. . . . . 10**
**Warranty Limited - 2004 Lapalma. . . . . 5**
Disclaimer of Consequential &
Incidental Damages . . . . . 8
Events Discharging Warrantor from
Obligation Under Warranty . . . . . 8
How to Get Service. . . . . 7
Legal Remedies. . . . . 9
Limitations of Implied Warranties. . . . . 6
What the Warranty Covers. . . . . 6
What the Warranty Does Not Cover . . . . . 8
What We Will Do to Correct Problems. . . . . 6
**Warranty Transfer Application. . . . . 29**
**Washer - Dryer (Optional). . . . . 189**
Test Procedure. . . . . 189
Washer-Dryer Maintenance . . . . . 191
Winterizing the Washer-Dryer . . . . . 192
**Washer-Dryer Prepared (Optional) . . . . . 188**
**Waste Water Systems . . . . . 254**
Black Tank Flush . . . . . 257
Proper Waste Disposal . . . . . 254
Waste Drain & Sewage Tanks . . . . . 255
Waste Drain Hose. . . . . 256
What Not to Put into the Holding Tanks . . . . . 255
What to Put into the Holding Tanks -
Black Water Tank . . . . . 257
What to Put into the Holding Tanks -
Grey Water Tank. . . . . 257
**Water - City Hook-Up . . . . . 249**
**Water Filter - Faucet . . . . . 252**

**Water Heater . . . . . 182**
Before Using the Water Heater . . . . . 182
Burner Compartment . . . . . 187
Draining & Storage. . . . . 187
Ignition Module Function . . . . . 184
Operation . . . . . 183
Pressure Temperature Relief Valve . . . . . 186
Thermostats . . . . . 185
Tips. . . . . 187
Water Heater Bypass . . . . . 185
**Water Pump. . . . . 250**
Water Pump -Troubleshooting. . . . . 251
**Water System. . . . . 252**
Disinfecting Fresh Water . . . . . 253
Faucet Screens. . . . . 253
Troubleshooting . . . . . 252
**Water Systems - Introduction . . . . . 247**
**Water Tank - Fresh Fill . . . . . 248**
**Water Tank - Fresh Gravity Fill . . . . . 249**
**Weighing the Motorhome. . . . . 78**
Example Tire Chart. . . . . 86
Four Corner Weighing (Example) . . . . . 83
Weight Label . . . . . 82
**Window Treatments . . . . . 134**
Day/Night Shades . . . . . 135
Mini Blinds . . . . . 134
**Windows. . . . . 133**
Condensation. . . . . 133
**Winterizing . . . . . 263**
Using Air Pressure . . . . . 263
Using Non Toxic Antifreeze . . . . . 265
**Wood Care . . . . . 129**
**Wood Finish. . . . . 10**
**Workhorse Gauges . . . . . 325**